SES-TD-98-002

PLANET-B
PRELAUNCH REPORT

MAY 1998



Institute of Space and Astronautical Science
SES Data Center

Preamble 1
1 Summary 2
1.1 Mission 2
1.1.1 Mission Objectives 2
1.1.2 Scientific Instruments 3
1.1.3 Mission Strategy 6
1.1.4 Observation Planning and Analyses 7
1.1.5 International Collaboration 8
1.2 Spacecraft system design 9
1.2.1 Overview 9
1.2.2 Scientific Instruments 10
1.2.3 Power System 11
1.2.4 Communication System 12
1.2.5 Command and Data Handling System 13
1.2.6 Launch Operation System 13
1.2.7 Attitude and Orbit Control System 14
1.2.8 Structure and Thermal Design 14
1.3 Spacecraft Properties 28
1.3.1 Mass 28
1.3.2 Moment of Inertia 31
1.3.3 Power Consumption 32
1.4 Mission Scenario 44

2 Scientific Instruments 49
2.1 Particle Spectrum Analyzer (PSA) 49
2.1.1 Observation Objectives 50
2.1.1.1 Electron Spectrum Analyzer(ESA) 50
2.1.1.2 Ion Spectrum Analyzer(ISA) 51
2.1.1.3 Electron and Ion Spectrometer(EIS) 52
2.1.1.4 X-ray Ultra-violet scanner(XUV) 56
2.1.2 Instrument Specifications 59
2.1.2.1 ESA 59
2.1.2.2 ISA 59
2.1.2.3 EIS 59
2.1.2.4 XUV 60
2.1.3 Instrument Configuration 61
2.1.3.1 ESA-S 61
2.1.3.2 ISA-S 61
2.1.3.3 EIS-S 61
2.1.3.4 XUV-S 71
2.1.3.5 PSA-E 71
2.1.4 Size , Weight , and Power Consumption 73
2.1.4.1 Size & Weight 73
2.1.4.2 Power Consumption 74
2.1.5 Operation 76
2.1.5.1 ESA Operation 76
2.1.5.2 ISA Operation 76
2.1.5.3 EIS Operation 77
2.1.5.4 XUV Operation 78

2.1.6 Command and Telemetry Consumption 78
2.1.6.1 Command Items 78
2.1.6.1.1 Discrete Commands 78
2.1.6.1.2 Block Commands 80
2.1.6.2 Telemetry Items 87
2.1.6.2.1 Status Data 87
2.1.6.2.2 HK Status 91
2.1.6.2.3 Mission Packet 92
2.1.7 Particular Cares Required 97
2.1.8 Appendix 98
2.1.8.1 Intensity of the scattered EUV light 98
2.1.8.2 EUV intensity from the Martian atmosphere and ionosphere 98
2.1.8.3 EUV intensity from the magnetosphere of the Earth 100
2.2 Plasma Wave Analyzer (PWA) 101
2.2.1 Scientific Objectives 102
2.2.1.1 PWS (Plasma Wave and Sounder Experiment) 102
2.2.1.2 LFA (Low Frequency Wave Analyzer) 102
2.2.2 Instrument Specifications 103
2.2.2.1 PWA-E 103
2.2.2.2 PWS 104
2.2.2.3 LFA 108
2.2.2.4 WANT (Wire Antenna System) 113
2.2.2.5 Software 119
2.2.3 Size, Weight, and Power Consumption 121
2.2.3.1 Size and Weight 121
2.2.3.2 Power Consumption 121
2.2.4 Operation 122
2.2.5 Command s and Telemetry 123
2.2.5.1 Commands 123
2.2.5.2 PWA Status Telemetry 129
2.2.6 EMI Requirements to Other Subsystems of the PLANET-B Spacecraft 134
2.3 MGF/PET/MST/UVS (MPM) 135
2.3.1 Observation Objectives 231
2.3.1.1 Magnetic Field Measurement(MGF) 136
2.3.1.2 Probe for Electron Temperature(PET) 136
2.3.1.3 Ultraviolet Imaging Spectrometer(UVS) 138
2.3.2 Instrument Specifications 138
2.3.2.1 Magnetic Field Measurement(MGF) 138
2.3.2.2 Probe for Electron Temperature(PET) 139
2.3.2.3 Ultraviolet Imaging Spectrometer(UVS) 142
2.3.2.4 Extendible Mast(MST) 145
2.3.2.5 MPM-E 148
2.3.3 Instrument Configuration 149
2.3.4 Size, Weight, and Power Consumption 156
2.3.4.1 Size and Weight 156
2.3.4.2 Power Consumption 156
2.3.5 Operation 157
2.3.5.1 MGF and PET 157
2.3.5.2 UVS 160

2.3.5.3 MST 162
2.3.6 Command and Telemetry Items 164
2.3.6.1 Command Items 164
2.3.6.2 Telemetry Items 168
2.3.7 Particular Cares Required 174
2.3.8 Appendix : MGF Science Team 175
2.4 Mars Imaging Camera (MIC) 176
2.4.1 Science Objectives 176
2.4.2 Instrument Specifications 177
2.4.2.1 Hardware Specifications 177
2.4.2.2 Software functions overview 181
2.4.2.3 Manual Mode 181
2.4.2.4 Software-control Mode (Autonomous Tracking Mode) 182
2.4.2.5 Memory-pointer operation function 183
2.4.3 Instrument Configuration 184
2.4.3.1 CCD-ASSY 184
2.4.3.2 ASP1-PWB, ASP2-PWB 185
2.4.3.3 DSP-PWB 185
2.4.3.4 JPEG-PWB 185
2.4.3.5 SICPU-PWB 185
2.4.4 Operation 189
2.4.4.1 Procedure for MIC turn-on 189
2.4.4.2 Comparison among hardware and Software modes 189
2.4.4.3 Procedure for Manual mode imaging 190
2.4.4.4 Procedure for Auto mode imaging 191
2.4.4.5 Procedure for Autonomous-tracking imaging 191
2.4.4.6 Procedure for turn off 192
2.4.4.7 Thermal control 192
2.4.5 Size, Weight, and Power Consumption 193
2.4.6 Command and Telemetry Items 195
2.4.6.1 Command Items 195
2.4.6.2 Telemetry Items 202
2.5 Thermal Plasma Analyzer (TPA) 210
2.5.1 Observation Objectives 210
2.5.2 Instrument Configuration 211
2.5.3 Instrument Specifications 215
2.5.4 Size, Mass, Power Consumption 216
2.5.5 Instrument Operation 217
2.5.6 Command and Telemetry 218
2.5.7 Special Requirements 221
2.6 The Ion Mass Imager (IMI) 224
2.6.1 Scientific Objectives 224
2.6.2 Instrument Detection System 226
2.6.3 Size, Weight, Thermal Specification and Power Consumption 227
2.6.4 Instrument Specification 228
2.6.5 Operation 228
2.6.5.1 Raw Data Production 228
2.6.5.2 Telemetry allocation for IMI 229
2.6.5.3 Integration Options 229

2.6.6 Suggested Telemetry Content from IMI 230
2.6.7 Command / Telemetry 235
2.6.7.1 IMI DC commands 235
2.6.7.2 IMI BC commands 238
2.6.7.3 IMI bi-level status 239
2.6.7.4 IMI analogue status 240
2.6.8 Appendix 240
2.6.8.1 Telemetry 240
2.6.8.2 Energy Table (at 20° C) 241
2.6.9 Figures 242
2.7 Mars Dust Counter (MDC) 248
2.7.1 Observation Objectives 248
2.7.2 Instrument Specifications 253
2.7.3 Instrument Configuration 256
2.7.4 Size, Weight, and Power Consumption 256
2.7.5 Operation 257
2.7.6 Commands and Telemetry Items 262
2.7.6.1 Commands 262
2.7.6.2 Telemetry Items 265
2.7.7 References 268
2.8 Neutral Mass Spectrometer (NMS) 269
2.8.1 Observation Objectives 269
2.8.2 Instrument Specifications 271
2.8.3 Instrument Configuration 272
2.8.4 Size, Weight and Power Consumption 272
2.8.4.1 Size and Weight 272
2.8.4.2 Power Consumption 272
2.8.5 Operation 273
2.8.5.1 Mechanical 273
2.8.5.2 Electrical 274
2.8.5.3 Instrument Response 274
2.8.5.4 Instrument Control 276
2.8.5.5 Instrument Modes 277
2.8.6 Command and Telemetry Items 277
2.8.6.1 Command Items 277
2.8.6.1.1 Discrete Commands (DC) 277
2.8.6.1.2 Block Commands (BC) 278
2.8.6.2 Telemetry Items 279
2.8.6.2.1 HK Status (Bilevel) Data 280
2.8.6.2.2 HK Data (Along) Values 281
2.8.6.2.3 NMS Science Packet 282
2.8.7 Particular Cares Required 283
2.9 Radio Science Experiment in PLANET-B Mission 291
2.9.1 Major Scientific Objectives 291
2.9.2 Observation 292
2.9.3 Data Acquisition 293
2.9.4 Requirement to the Onboard System 294
2.10 Theory and Modeling 297
2.10.1 Objectives 297

2.10.2 Pre-Arrival Research 297
2.10.3 Post -Arrival Research 298
2.11 Field of View of the Scientific Instruments 299

3 Communications System 301
3.1 Parameters and Performance of the Whole System 301
3.1.1 TT&C Schemes 301
3.1.1.1 General 301
3.1.1.2 Telemetry Subsystem 301
3.1.1.3 Command Subsystem 302
3.1.1.4 Raging Subsystem 302
3.1.2 Spacecraft Segments 309
3.1.2.1 Coverage of PLANET-B Antennas 309
3.1.2.2 EIRP and G/T of PLANET-B 309
3.1.3 Ground Segment 313
3.1.3.1 Operations 313
3.1.3.2 EIRP and G/T of Tracking Stations 313
3.2 Link Analysis 315
3.2.1 Conditions for the Analysis 315
3.2.2 Results of Link Calculations 319
3.3 Antennas 330
3.3.1 High Gain Antenna(HGA) 331
3.3.2 Low Gain Antenna(LGA) 333
3.4 Electronic Components 336
3.4.1 S-Band Receiver(SBR) 336
3.4.1.1 General 336
3.4.1.2 Functions 336
3.4.1.3 Performance 337
3.4.2 S-Band Transmitter(TMS) 340
3.4.2.1 General 340
3.4.2.2 Functions 340
3.4.2.3 Performance 341
3.4.3 X-Band Transmitter(TMX) 344
3.4.3.1 General 344
3.4.3.2 Functions 344
3.4.3.3 Performance 344
3.4.4 X-Band Power Amplifier(XPA) 348
3.4.4.1 General 348
3.4.4.2 Electrical Function 348
3.4.4.3 Performance 348
3.4.5 S-Band Switch(SSW) 350
3.4.5.1 General 350
3.4.5.2 Functions 350
3.4.5.3 Performance 350
3.4.6 S-Band Diplexer(SDIP) 352
3.4.6.1 General 352
3.4.6.2 Functions 352
3.4.6.3 Performance 352

4 Command and Data Handling System 355
4.1 Overview 355
4.1.1 Operation Control System 355
4.1.1.1 Types of Commands 355
4.1.1.2 OP and OG 361
4.1.1.3 Program Loading 363
4.1.2 Autonomous Control System 369
4.1.3 Data Handling 370
4.2 Command Decoder (CMD) 374
4.2.1 Overview 374
4.2.2 Function 374
4.2.2.1 Command Demodulator 374
4.2.2.2 Command Data Decoder 376
4.2.2.3 Performance 376
4.3 Data Handling Unit (DHU) 380
4.3.1 Overview 380
4.3.2 Functions 380
4.3.2.1 CPU Module(CPM) 381
4.3.2.2 Command Interface Module(CMDIF) 381
4.3.2.3 Bus Control Module(BCNT) 382
4.3.2.4 Status Encoding Module 382
4.3.2.5 Telemetry Processor Module(TLMP) 385
4.3.2.6 Backup File Memory(BFM) 385
4.3.2.7 Interface 386
4.3.2.8 Performance 387
4.4 Peripheral Interface Module (PIM) 390
4.4.1 Overview 390
4.4.2 Functions 390
4.4.2.1 Supervisory Bus Message Decoder(S-BUS-DEC) 390
4.4.2.2 User Interface(USR I/F) 391
4.4.2.3 Response Bus Message Encoder(R-BUS ENC) 391
4.4.2.4 TI Counter(TIC) 391
4.4.2.5 Interface 391
4.4.2.6 Performance 391
4.5 Data Recorder (DR) 398
4.5.1 Overview 398
4.5.2 Functions 398
4.5.3 Operations 400
4.6 Telemetry Command Interface (TIC) 403
4.6.1 Overview 403
4.6.2 Functions 403
4.6.2.1 Command Decoder Module(CMD-DEC) 403
4.6.2.2 Telemetry Encoder Module(TLM-ENC) 403
4.6.2.3 Function to count pulse from SPM 404
4.6.2.4 Function to generate EPT/INS packet 404
4.6.2.5 Interface 404
4.6.2.6 Specification 404

5 Attitude and Orbit Control System 408

5.1 Overview 408
5.1.1 AOCS configuration and components 408
5.1.2 AOCS functions 409
5.2 Attitude and Orbit Control Electronics (AOCE) 412
5.2.1 Scope 412
5.2.2 Main Characteristics 413
5.3 Components for AOCS 414
5.3.1 SSAS (Spin-type Sun Aspect Sensor) 414
5.3.1.1 Scope 414
5.3.1.2 Main characteristics 414
5.3.1.3 Command Items 415
5.3.1.4 Telemetry Items 415
5.3.2 Star Scanner(SSC) 418
5.3.2.1 General description 418
5.3.2.2 Functions 418
5.3.2.3 Specification and Performance 418
5.3.3 Gas Rate Sensor (GRS) 426
5.3.3.1 General 426
5.3.3.2 Specification and Performance 426
5.3.3.3 Size, Weight, and Power Consumption 427
5.3.3.4 Electrical and Mechanical Interface 429
5.3.3.5 Command Items 430
5.3.3.6 Telemetry Items 430
5.3.4 Accelerometer(ACM) 431
5.3.4.1 General 431
5.3.4.2 Specification and Performance 433
5.3.4.3 Interface condition and thermal characteristics 435
5.3.4.4 External View 438
5.4 Propulsion System 439
5.4.1 Overview 439
5.4.2 System Description 439
5.4.3 Performance 441
5.5 Command and Telemetry Items 448
5.5.1 Command Items 448
5.5.2 Telemetry Items 448

6 Electrical Power System (EPS) 449
6.1 Overview 449
6.2 Solar Cell Paddle (SCP) 451
6.2.1 Overview 451
6.2.2 Functions 452
6.2.2.1 Electrical Functions 452
6.2.2.2 Mechanical Functions 454
6.3 Battery (BAT) 461
6.3.1 Overview 461
6.3.2 Functions 461
6.3.3 Operations 462
6.4 Power Controller and Distributor (PCD) 464
6.4.1 Overview 464

6.4.2 Functions 465
6.4.3 Operations 466
6.5 Power Supply Unit (PSU) 468
6.5.1 Overview 468
6.5.2 Function 468
6.5.3 Operation 469
6.6 Shunt Dissipater (SHNT) 470
6.6.1 Overview 470
6.6.2 Function 470
6.6.3 Mechanical Functions 471
6.7 Command and Telemetry Items 473
6.7.1 EPS Command List 473
6.7.2 EPS Telemetry List 476

7 Structure 480
7.1 Overview 480
7.2 Spacecraft Configuration 480
7.3 Design Criteria 480
7.3.1 System Environment Condition 480
7.3.2 Strength 481
7.3.3 Stiffness Requirement 481
7.4 Primary Structure 481
7.4.1 Upper Panel 481
7.4.2 Side Panel 481
7.4.3 Base Panel 482
7.4.4 Truss Construction 482
7.5 Mechanical Integration Parts 482
7.5.1 Overview 482
7.5.2 Components 482
7.6 Structural Analyses 490
7.6.1 Dynamic Analysis 490
7.6.2 Stress Analysis 490

8 Thermal Design and Control 495
8.1 Overview 495
8.2 Design Requirements 495
8.3 Thermal Design 495
8.3.1 Thermal Design of the Spacecraft Structure and Components 498
8.3.2 HGA 498
8.3.3 MLI 500
8.3.4 Battery 501
8.3.5 Summary of the HCE's Heater 501
8.4 Thermal Analyses 503
8.4.1 Thermal Analysis Case 503
8.4.2 Flight Temperature Prediction 503
8.5 Thermal Model Test 504
8.5.1 Test Objects 504
8.5.2 Thermal Model Testing 504

9 Radiation Environment 506
9.1 Estimation 506
9.1.1 Total Doze 506
9.1.2 Protection for Latch-up 506
9.2 Solar Particle Monitor(SPM) 508
9.2.1 Overview 508
9.2.2 Size, Weight, and Power Consumption 509
9.2.2.1 Size and Weight 509
9.2.2.2 Power 509
9.2.3 Command & Telemetry Items 509
9.2.3.1 Command 509
9.2.3.2 Telemetry Items 510
9.2.3.2.1 Bilevel Data 510
9.2.3.2.2 Other Status Data 510

10 Other Onboard System 512
10.1 ETP-SA(Electrical programmable Timer-Satellite) 512
10.2 Wire Harness 521
10.3 Nitrogen Purge System 522
10.3.1 at ISAS 522
10.3.2 During the Transportation 522
10.3.3 at KSC 522
10.4 INS-SA(INStrument - SAtellite) 528

11 Orbit Design 537

11.1 Orbit design Strategy (Nominal Launch Window) 537
11.2 Summary of Orbital Events (Nominal Launch Window) 537
11.2.1 Launch and Earth Orbiting Phase 538
11.2.2 Mars Transfer Phase 539
11.2.3 Mars Orbiter and Scientific Observations Phase 539
11.3 Nominal and Backup Launch Window 546
11.3.1 Launch Vehicle Capability 546
11.3.2 Mars Mission Launch Window Analysis (Interplanetary Phase) 546
11.3.3 PLANET-B Nominal and Backup Launch Windows 547
11.4 Mars Obit Insertion Conditions (Nominal Launch Window) 559
11.5 Mars Orbiter Phase Characteristics (Nominal Launch Window) 561
11.6 Initial Operations Plan (Nominal Launch Window) 563
11.7 Mars Orbit Insertion Operation Plan (Nominal Launch Window) 568

12 Ground System and Mission Operations 570
12.1 Spacecraft Checkout, Tracking and Operation System 570
12.1.1 General 570
12.1.2 Function of Spacecraft Checkout System 573

12.1.3 Function of Spacecraft Tracking and Operation System 574
12.1.3.1 Sagamihara Spacecraft Operation Center(SSOC) 574
12.1.3.2 Usuda Deep Space Center(UDSC) and Kagoshima Space Center(KSC) 574
12.1.3.3 Data Communication networks Connecting SSOC, UDSC and KSC 575
12.1.4 Characteristics of the Spacecraft Checkout, Tracking and Operation System and Their Equipment 575
12.2 Orbit Determination System 583
12.2.1 Introduction 583
12.2.2 Orbit Determination System Data Flow 584
12.2.3 Orbit Determination Program 584
12.2.4 Orbit Prediction Program 586
12.2.5 Real Time Monitor Program 586
12.3 Operation Planning System 588
12.3.1 Introduction 588
12.3.2 Basic Functions of ISACS-PLN 588
12.3.3 General Rule of Command Usage 590
12.3.4 General Rule of Spacecraft Operation 591
12.3.5 Command Planning Procedure 592
12.3.6 ORLmars 593
12.3.6.1 Scope of ORLmars 594
12.3.6.2 Specification of ORLmars 594
12.3.6.2.1 Block 594
12.3.6.2.2 Format 595
12.3.6.3 Description 595
12.3.6.3.1 Header Block 595
12.3.6.3.2 Command Sequence Block 597
12.3.6.3.3 Start Time Block 598
12.3.6.3.4 End-of-file declaration 599
12.3.6.3.5 Comments 599
12.3.6.4 Example of ORLmars 599
12.4 Operation Supporting System 600
12.5 Data Archive and Ground Data Handling System for Scientific Instruments 603
12.5.1 Network Configuration 603
12.5.2 Telemetry Data Flow in a Real-Time Operation 604
12.5.3 Contents of the PLANET-B File Server 604
12.5.4 Science Data Base(SDB) 604

Appendix-A : Telemetry Format 607
Appendix-B : HK Items 620
Appendix-C : Command Items 716
Appendix-D : Special Abbreviations, Acronyms and Nomenclature 771

Preamble

Development of the ISAS new launcher M-V has made it possible for the Japanese planetary science community to explore the moon and the nearby planets by its own vehicles. The Planet-B is the second of the M-V based programs following the radio astronomy satellite MUSES-B(Haruka) launched in 1996. Before the official start of the Planet-B program, a working group on the exploration of the terrestrial planets was formed in 1985 and had studied scientific problems to solve as well as technical feasibility of exploring Venus and Mars. The working group was reorganized to the Planet-B project team when the project was approved in 1992.

The objectives of the Planet-B are twofold, the scientific objectives and engineering ones. The primary scientific objective is to study the structure and dynamics of Martian upper atmosphere with emphasis on its interaction with the solar wind. The engineering objective is to develop basic technologies for the ISAS's planetary explorations, which follow Planet-B.

Mars has no intrinsic magnetic field strong enough to stand off the solar wind far above the atmosphere and the Martian upper atmosphere is considered to be under strong control of the solar wind. This situation resembles to that of Venusian upper atmosphere but the observations of Martian ionosphere by the two Viking landers suggest that somewhat different processes from those in Venusian ionosphere dominate in the Martian ionosphere. Large flux of ionospheric ions escaping from Mars observed by Phobos 2 spacecraft also suggests that some important processes remain unexplored. Planet-B is the first spacecraft dedicated to the investigation of Martian upper atmosphere and expected to make significant contributions to the understanding the atmosphere of non magnetized planet as Pioneer Venus Orbiter did decades ago with Venus.

Although the primary scientific research target is the upper atmosphere, Planet-B aims to make contributions to Martian meteorology, geology, and dust ring detection using onboard camera, radio sounder, and dust counter.

Planet-B is scheduled for launch in early July, 1998 from Kagoshima Space Center. After staying in the earth-revolving orbit for four months, Planet-B starts long journey to Mars in December 1998 and arrives at Mars in October, 1999. The scheduled operation period is two years (one Martian year). Planet-B started as a domestic program but collaborations with the United State (NASA), Canada, Sweden, Germany, and France (CNES) are under way. It is hoped that collaboration expands world wide in the data analysis phase.

1. Summary

1.1 Mission

K. Tsuruda and H. Hayakawawa (ISAS)

1.1.1 Mission Objectives

The primary objective of the program is to study the Martian aeronomy, putting emphasis on the interaction of the Martian upper atmosphere with the solar wind. It is believed that Mars has no intrinsic magnetic field strong enough to stand off the solar wind far above the atmosphere. The knowledge of the Venus upper atmosphere accumulated by the PVO (Pioneer Venus Orbiter) suggests that the Martian upper atmosphere be strongly controlled by the solar wind. The two existing in situ measurements of the Martian ionosphere profiles made by the two Viking landers, however, do not show clear feature of the interaction with the solar wind as is seen in the Venusian ionosphere. The analysis of the Martian bow shock position shows dissimilarity with that of Venus. The mean distance to the sub solar shock at Mars is larger than at Venus when normalized by the respective planetary radius. The clear dependence of the shock position on the solar cycle observed at Venus is not seen at Mars. These results could be interpreted as an indirect evidence for the presence of weak but significant intrinsic magnetic field at Mars. However, discussions against this interpretation are also possible and recent observation of Martian magnetic field by Mars Global Surveyor supports this view. We expect that the Planet-B magnetic field experiment gives the final resolution to this problem.

The Martian upper atmosphere remains unexplored by the spacecraft equipped with a set of in situ instruments. Except for two Viking landers, the 'Phobos 2 periapsis altitude of 850 km is the lowest but it is still too high for the measurements of the most important altitude range of 150 – 300 km. The scarcity of the in situ measurements at Martian upper atmosphere has made it difficult to compare the structure and physical processes in the upper atmosphere of the two planets, Venus and Mars. If Mars has weak but significant intrinsic magnetic field, the interaction of the upper atmosphere with the solar wind at Mars would be quite different from either at the Earth or at Venus. On the other hand, if Mars is non-magnetized, as is Venus, the dissimilarity in the solar wind interaction at the two planets has to be explained Measurements by Planet-B will make the similarity and dissimilarity clearer and comparison of the two planets will be done on more firrm experimental basis.

In order to cover the altitude range of interest, the periapsis altitude is chosen as low as 150 km. The effects of the solar wind on the ionosphere will be largest at the sub-solar point where the dynamic pressure of the solar wind is at maximum. The orbit is designed so that the periapsis comes close to the sub-solar point at least twice during the designed lifetime of the spacecraft.

The importance of the plasma measurements in the nightside tail region of Mars is demonstrated by the finding of escaping ionospheric ions by 'Phobos 2'. The total mass flux and energy flux carried away by the escaping ions are found to be so enormous that, if the escape occurs continuously, significant effects are expected on the evolution of the atmosphere. Planet-B will carry out extensive and systematic

measurements of energetic ions in the tail region. The apoapsis of 15 Mars radii is suited for the observation in the tail.

The Martian upper atmosphere is controlled by the meteorological activities in the lower atmosphere. Monitoring of the dust storms and the growth and decay of polar ice are necessary. Visible camera onboard Planet-B is used for this purpose.

Although the primary research area for the Planet-B program is the Martian aeronomy, the researches in other fields are also planed in the Planet-B program. The visible camera is used, as mentioned above, as a tool for the study of Martian meteorology. It can also be used to take photographs of Martian surface with moderate resolution of 100 m per pixel. The orbit of Planet-B intersects several times with those of Phobos and Deimos. The camera can take close up image of those satellites. A light weight instrument 'dust counter' observes dusts during the cruise phase and also in the orbit of Mars. With this instrument, there is a possibility to detect the dust ring of Mars or set an upper limit of the dust ring density.

In addition to the scientific objectives, the Planet-B program has engineering objectives to develop key technologies for the ISAS's future planetary missions. The launch capability of ISAS's new launching vehicle M-V is moderate and one of the engineering challenges in the Planet-B program is to realize a light weight but high performance spacecraft. The net weight of the Planet-B spacecraft without propulsion system is around 186 kg. Extremely lightweight on-board equipment both for the bus and science instruments is necessary to realize the science objectives within this weight limit.

1.1.2 Scientific Instruments

The 14 instruments listed in the Table 1.1-1 below are installed on Planet-B. Some of them make observations in the parking orbit around the earth and during the cruising phase. But the full-scale observations start after the deployment of antennas and boom which will be made shortly after the injection of the spacecraft into Mars orbit in October 1999.

1) Composition of upper atmosphere

The neutral mass spectrometer (NMS) and ion mass spectrometer (TPA and IMI) measure the composition of neutral atmosphere and ionosphere, respectively, along the track of the spacecraft and the ultra violet imaging photometer (UVS) measures atmospheric composition remotely. The altitude profile of electron density measured by top side sounder as well as in situ measurement (PWS) will also give the information of the ionospheric composition.

Table 1.1-1 Scientific Instruments onboard Planet-B

Magnetic Field (MGF)	3-axis, 0.1 nT accuracy
Energetic Electrons (ESA)	5 eV – 22 keV
Energetic Ions (ISA)	10 eV – 20 keV/q
Energetic Ion Mass (IMI)	0.5 eV – 40 keV/q
High Energy Particles (EIS)	40 – 500 keV (e, p, He, O)
Thermal Ion Drift (TPA)	0.1 – 100 eV, drift velocity
Electron Temperature (PET)	Electron Temperature Probe
UV Spectra (UVS)	H, O, CO, CO_2, imaging, D/H ratio
Sounders and HF Waves (PWS)	Electron Density Profile, HF waves
Plasma Waves (LFA)	VLF/ELF waves
Visible Camera (MIC)	Visible image, 3 colors
Dust Counter (MDC)	Dust counter
EUV Spectrometer (XUV)	He^+ ion contents
Neutral Gas Mass (NMS)	Neutral gas mass spectrometer
Radio Science	Radio occultation measurement

2) Altitude profile of electron density and temperature

In order to estimate the 'strength' of the Martian ionosphere against the impinging solar wind, the knowledge of electron temperature is inevitable. One of the arguments made for the presence of the Martian magnetic field is the low ionospheric pressure measured by the Viking probe compared to the solar wind dynamic pressure. The electron temperature measured by PET combined with the electron density measurement by PWS will give good estimates of the strength of the ionosphere.

3) Magnetic field

If Mars has the intrinsic magnetic field of the order of 50 nT at the ionospheric altitude, the interaction of the ionosphere with the solar wind at Mars would become a quite different one from that at Venus. Existence of the intrinsic magnetic field also suggests that the dynamo action in the Martian core is still working. This will impose a bounding condition to the thermal history of Mars. Even when the intrinsic magnetic field is absent, the solar wind magnetic field would pile up on the dayside and drape toward the night side of Mars forming Martian tail. The magnetic field sensor is deployed 5 m from the spacecraft in order to avoid interference generated from the currents in the spacecraft.

4) Drift velocity of thermal ions

Solar wind will transfer part of their momentum to the ionospheric ions during the interaction. Neutral wind will also interact with ions. Although Planet-B has no instrument to measure neutral wind directly, the thermal ion drift velocity measured by TPA can be used to construct dynamical features of neutral atmosphere and ionosphere.

5) Solar wind and pick-up ions

The solar wind approaching Mars will first encounter hot ionospheric atoms before reaching the main body of the ionosphere. Some of these atoms will be ionized by the charge exchange and solar UV in the solar wind and transported with the solar wind. The rate of this ion pick up process has not been measured at Mars experimentally. The small radius of Mars compared with the gyro radius of pick up ions produces asymmetric distribution of energetic ions. EIS and high-energy channel of IMS and ISA measure the pick up ions.

6) Plasma waves

Effective collisions given rise to by plasma waves are considered to play important roles in the interaction with the solar wind. Many of particle acceleration mechanisms are known to involve wave particle interactions. Lightning activity associated with dust storms is expected in the lower atmosphere. The same instrument can measure this. PWS and LFA using two pairs of tip to tip 50 meters antenna measure plasma waves in the ELF to HF range.

7) Energetic ions and electrons

Interaction with the solar wind produces energetic electrons and ions of a few hundred eV to a few tens keV. The escaping oxygen ion beam found in the tail region by 'Phobos 2' has been accelerated to a few keV. Measurements of energy spectra, pitch angle distribution, and mass will be done by the combination of ESA, ISA, IMI and EIS.

Items from 1) through 7) above are intended mainly for the study of Martian aeronomy and the interaction between Martian upper atmosphere and the solar wind. The following measurements aim at contributing to the other research area.

8) Interplanetary dust and Martian dust ring

Dust distribution in the space between the Earth and Mars is measured by the dust counter (MDC) along the trans-Mars orbit. MDC is also used for the detection of dust rings that might exist along the orbits of Martian satellite Phobos and Deimos.

9) Cloud, haze, dust storm and polar ice

As a monitor for the meteorological activities in the lower atmosphere, which is considered to modify the upper atmosphere significantly, a camera (MIC) of moderate resolution is installed. This camera will be used to take a global image of Mars from a large distance at least once per orbital period. This image will give crude information of cloud distribution, polar haze activity, dust storms, and growth and decay of polar ice and can be used for the study of large scale dynamics of Martian atmosphere. The image from the periapsis altitude has the resolution of 100 m. Though the chance of taking high resolution images is restricted by the capacity of telemetry, it is planned to increase the frequency of taking high resolution images on special events, such as the onset of dust storm.

10) Image of Martian surface and Phobos and Deimos

Camera is also used for the study of the surface science. Selecting targets of interest, high-resolution images will be taken. Study of weathering effect will be one of the research targets that can be done by comparing with the Viking images. The orbit of Planet-B intersects those of Phobos and Deimos and there are several chances of close encounter with those satellites during the lifetime of the spacecraft. It is planned to take close up images of these satellites at the encounters.

11) Reflectivity of Mars at radio frequency

The RF radio waves transmitted from the topside sounder (PWS) penetrates the ionosphere at high frequency end and surface echo will be received at these frequencies. Analysis of surface echo is expected to give some information on the sub-surface structure.

12) Interplanetary helium glow and Martian helium ion content

Interplanetary glow at Helium II line (304 Å) is measured during the cruise phase by XUV. This measurement is included primarily to provide basic data for the future magnetospheric imaging technology but it also gives Helium ion contents in the Martian upper atmosphere. A helium content is one of the key parameters for the study of thermal history of Mars.

13) D to H ratio of the upper atmosphere

D/H ratio in the upper atmosphere is a key information to the evaluation of water loss from the Martian atmosphere. D/H ratio is measured by absorption cell technique by as a part of the UVS instrument.

1.1.3 Mission Strategy

Observations in the low altitude ionosphere, the Martian tail, and the near Mars solar wind are important for the understanding the structure of the Martian upper atmosphere and its interaction with the solar wind. The highly elliptical Planet-B orbit with periapsis altitude of 150 km and apoapsis distance of 15 Martian radii makes it possible to observe all of these three regions of interest. The orbital inclination of 170 degrees with respect to the ecliptic plane is chosen so that the subsolar ionosphere can be sampled at least one of the Planet-B periapsis path during the design life and also to keep the solar eclipse time within the allowed period limit. The periapsis segment of the orbit is extremely important for the Planet-B science objectives. Most of the scientific instruments will be operated at their maximum capability during this short time period near the periapsis. In order to accommodate with the rush of data stream from the instruments, a solid state data recorder of 100 Mbits capacity is employed. This capacity is sufficient to store the data with 64 kbps during the passage of periapsis. The data stored in the data recorder during the periapsis path are played back and transmitted to Earth during the rest of the orbit where the data rate from the instrument can be made lower.

The Planet-B orbit crosses the orbits of Martian satellites, Phobos and Deimos and with small trimming of the orbit will make Planet-B encounter these Martian satellites several times during its lifetime. Taking this opportunity, close up images of Phobos and Deimos will be taken by the onboard camera and the near satellite environment will be measured other instruments.

The prime tracking station for the Planet-B spacecraft is UDSC (Usuda Deep Space Center) with 64-mϕ antenna. The 34-mϕ new antenna system at Kagoshima Space Center (J-KSC) will be also used for the uplink operation and a backup station at critical spacecraft operations. The telemetry and ranging data obtained at UDSC / J-KSC is sent via ground line to SSOC (Sagamihara Spacecraft Operation Center) where data processing is carried out. Telemetry data monitoring, science data analysis, orbit / attitude determination and control and command sequence generation are carried out at SSOC. The generated command data is sent via the ground line to UDSC / J-KSC and is sent to the spacecraft. Although the operation of the Planet-B spacecraft assumes Japanese stations, support from the NASA Deep Space Network (DSN) will contribute greatly to secure the mission success and also to increase the science return.

The design lifetime of Planet-B is one Martian year (two Earth years). The most critical to the mission life is the amount of the fuel to maneuver the attitude of the spacecraft which is necessary to direct the body mounted communication dish to Earth. The operation of the spacecraft after the nominal mission life of one Mars year depends on the available fuel at that time and is not determined.

1.1.4 Observation Planning and Data Analyses

The planning for observations and the policy of data usage are determined by the 'Planet-B science working group meeting' (Planet-B SWG meeting) which consists of the principal investigators, co-investigators, and those responsible for the Planet-B project. The Planet-B SWG meeting is chaired by the project scientist and will be held approximately every two or three months.

The raw data acquired from the spacecraft are archived in the ISAS data system and distributed to the experimenter groups along with the ancillary data. The evaluation of the raw data is the responsibility of the respective principal investigator and his group. The evaluated data are to be returned and registered in the ISAS data system within TBD time. All data obtained by the Planet-B project are considered as a common asset not only for the Planet-B scientists but also for anyone interested in them. Time and method of data release are determined by the Planet-B SWG meeting. Those who are interested in the data obtained in the early phase (data evaluation phase), are strongly encouraged to join in the SWG by contacting with an appropriate principal investigator or the project scientist. Table 1.1-2 shows core members of the Planet-B SWG.

Table 1.1-2. Planet-B SWG Core Members

Researcher	Organization	Title
K. Tsuruda	Inst. Space and Astron. Sci.	Program Manager
I.. Nakatani	Inst. Space and Astron. Sci.	Project Manager
H. Hayakawa	Inst. Space and Astron. Sci.	Project Scientist, PI of ISA
S. Machida	Kyoto Univ.	PI of ESA
J. Kikuchi	Waseda Univ.	PI of EIS
R. Lundin	Swedish Inst. Space Phys.	PI of IMI
A. W. Yau	Univ. Calgary	PI of TPA
H. B. Niemann	NASA/GSFC	PI of NMS
K. Oyama	Inst. Space and Astron. Sci.	PI of PET and Radio Science
T. Ono	Tohoku Univ.	PI of PWS
H. Matsumoto	Kyoto Univ.	PI of LFA
H. Fukunishi	Tohoku Univ.	PI of UVS
K. Yamashita	Nagoya Univ.	PI of XUV
T. Mukai	Kobe Univ.	PI of MIC
E. Igenberg	Tech. Univ. Munich	PI of MDC
S. Sasaki	Univ. Tokyo	PI of MDC
H. Shinagawa	STE lab., Nagoya Univ.	PI of Theory and Modeling

1.1.5 International Collaboration

The following organizations are collaborating with ISAS in the development of the onboard instruments;

- CSA (Canadian Space Agency) in the development of Thermal Plasma Analyzer,
- TUM (Technical University of Munchen) in the development of Mars Dust Counter,
- IRF (Swedish Institute of Space Physics) in the development of Ion Mass Imager,
- CNESS (Centre Narinal d'Etudes Spatiales) in the data compression technique for Mars Imaging Camera, and
- NASA (National Space and Aeronautical Agency) in the development of Neutral Mass Spectrometer.

In order to secure the mission success and increase the science return, supports of the NASA Deep Space Network for the orbit determination during the phases critical to the mission and for radio occultation measurements are being discussed.

For the collaborations in the data analysis phase, some guest investigator program is to be discussed. It will be also discussed in the Planet-B SWG meeting.

1.2 Spacecraft System Design

I.Nakatani (ISAS)
NEC Corporation

1.2.1 Overview

PLANET-B is a spin-stabilized spacecraft with a 1.6mϕ high gain antenna(HGA) fixed onto the top. Two-wing solar cell paddles are also fixed to the body. The overall spacecraft configurations during launch phase and Mars orbiting phase are shown in Figure 1.2.1-1 and Figure 1.2.1-2 respectively. As shown in Fig.1.2.1-2, the spacecraft has two wire antennas with tip-to-tip-length of 50m. The necessary tension in radial direction is given taking advantage of 7.5rpm spin. Also, a 5m simplex mast and a 1m boom are extended in Mars orbit.

As the HGA has a sharp radiation pattern with the half beam width of 0.7° , it is essential that the spacecraft spin axis, which coincides with the HGA boresight direction, is controlled towards the earth. The angle between the earth and the sun seen from the Mars orbit is within ±45° , so we can fix both the HGA and the solar paddles to the spacecraft body. This configuration, with neither the earth-pointing gimbal for the HGA nor the sun-tracking mechanism for the solar arrays, helps simplification of the spacecraft thus contributing to overall weight reduction and reliability increase even with larger solar array size compared with the case with sun-tracking mechanism.

For large orbit maneuvers, newly developed 500N bi-propellant thruster is used which is on the bottom of the spacecraft. Immediately after injection of the Mars orbit, four 25m-long wire antennas, 5m mast and 1m boom are deployed.

The total wet weight of the spacecraft is 540 kg and the dry weight 260.5kg. One of the most challenging items for technology development is the reduction of the spacecraft weight. Examples of the newly introduced technologies to name a few are:

1) Light weight HGA dish using 3-axis weaving of composite material,
2) Surface-mount technique for electronics circuits,
3) High-efficiency(16.8%) solar cells,
4) Nickel-Metal-Hydride battery and
5) Composite material He tank for bi-propellant thruster system.

Figures 1.2.1-3 and 1.2.1-4 are the system block diagram and component list respectively. The PLANET-B subsystem functions and specifications are listed in Table 1.2.1-1.

1.2.2 Scientific Instruments

Fourteen science instruments (TPA, ESA, ISA, EIS, XUV, IMI, MGF, PET, UVS, PWS, LFA, MIC, MDC, and NMS) are onboard the PLANET-B spacecraft for scientific mission. Ten instruments out of the 14 are from Japan and the other four are from abroad: Canada, Germany, Sweden and the U.S. These instruments have 12 sensors and three extendible mechanisms (WANT-1～4, MST and TPA-S).

Japanese instruments are integrated into four mission groups : PWA (PWS, LFA, WANT-1～4), PSA (ESA, ISA, EIS, XUV), MPM (MGF, PET, UVS, MST), and MIC. These mission groups have the same standardized CPU boards and power supply units.

Onboard software for all the instruments are stored in the backup file memory (BFM) in the data handling unit (DHU).

The foreign scientific instruments (IMI, MDC, TPA, NMS) have their own CPU systems and DC/DC converters and their onboard programs are stored in their own ROMs.

1.2.3 Power System

The power system consists of :

-Solar Cell Paddles (SCP)

-Batteries (BAT-A,B)

-Power Control Unit (PCU)

-Distributor (DIST)

-Power Supply Units (PSUs)

-Shunt Dissipaters (SHNT-A,B)

The 16.8% efficiency silicon solar cells (Size : 2cm × 4cm × 0.1mm ^{t}) with cover glasses coated with conductive material are installed on the solar cell paddles which consist of dual wings each of which has three rigid panels. Generated power is more than 200watts through the mission period.

PLANET-B has a battery system for operations in a shadow. It consists of two 15AH batteries using nickel metal hydride (NiMH) cells. Analog sequential shunt dissipaters are used for over-voltage control.

The power control unit and distributor control the power bus voltage to be 16.3 volt～27.5 volt and distribute the primary power for each component. And they also have the functions of current limiting and circuit breaking for each power bus line and charge / discharge controlling. The PCU collects telemetry data from each component of the power system and sends it to the DHU through the PIM.

PSU is a DC/DC converter with switching a regulator and provides secondary power, which is regulated at several secondary voltages for each user. The switching frequency is 300kHz～480kHz.

1.2.4 Communication System

The communication system consists of :

-S/X-band High Gain Antenna (HGA)
-S-band Low Gain Antennas (LGA-A,B)
-S-band Switches (SSW-A,B)
-S-band Diplexer (SDIP-A,B)
-S-band Receivers (SBR-A,B)
-S-band Transmitter (TMS)
-X-band Transmitter (TMX)
-X-band power Amplifier (XPA)

PLANET-B uses two RF bands (S:2GHz & X:8GHz) with three communication links, S-up, S-down and X-down links. Phase modulation is used for all links.

HGA is a light weight integrated system which consists of 1.6m diameter parabolic mesh antenna, S/X common feed system, XPA and LGA-A. X-band downlink has 5watt transmission power and 37.7dBi HGA peak gain. It is used for high rate communication. The bit rate for X-band is 2048bps～32,768bps. S-band downlink has 4.0watt and 27.8dBi HGA peak gain. It is used for low rate communication for house keeping telemetry monitoring. The bit rate for S-band is 64bps～1024bps.

The commands from the earth stations to the PLANET-B are sent via S-band uplink with the bit rates of 15.625bps and 125bps. Either S or X band is used for ranging downlink. Ranging can be carried out concurrently with telemetry transmission.

1.2.5 Command and Data Handling System

The data handling system consists of :

-Data Handling Unit (DHU)

-Peripheral Interface Modules (PIM)

-Command Decoder (CMD)

-Data Recorder (DR)

-Telemetry and Command Interface (TCI)

TCI is the telemetry and command interface for the communication and EPT/INS subsystems. TCI sends commands to and receives telemetry data from these subsystems. The received telemetry data is provided to DHU through PIM.

CMD demodulates uplink signal, decodes its PN code and sends commands to DHU. CMD can be used for two uplink bit rates (15.625bps / 125bps).

DR is a solid state data recorder with 134 Mbit capability. It can be used for simultaneous recording and reproducing.

The data handling system consists of DHU and PIMs. This system sends commands to each PIM user under its priority control. Also it collects and edits the data from PIM users. The telemetry transfer format for PLANET-B is based on the CCSDS AOS format. DHU has the functions of telemetry/command data handling including DR interface (recording /reproducing of telemetry data to/from the data recorder) and autonomous control of spacecraft.

1.2.6 Launch Operation System

The launch operation system consists of:

-Electrical Programmable Timer-Satellite (EPT-SA)

-Instrument-Satellite (INS-SA)

EPT-SA controls the ignition of pyro devices in accordance with the planned time sequence. INS-SA measures the environmental conditions during launch and sends the measured data to the ground through the launch vehicle and spacecraft.

1.2.7 Attitude and Orbit Control System

The attitude and orbit control system consists of :

-Attitude and Orbit Control Electronics (AOCE)
-Sun Aspect Sensor (SAS)
-Star Scanner (SSC)
-Gas Rate Sensor (GRS)
-Accelerometers (ACM-A～D)
-Nutation Damper (ND)
-Reaction Control System (RCS)
-Orbit Maneuvering System (OMS)

ND is a hoop partially filled with silicon oil and is used to damp spacecraft nutation caused mainly by attitude maneuvers.

GRS is used for active nutation control during power flight with the 4th stage of the M-V launch vehicle.

SAS and SSC acquire the sun sensor data for spacecraft attitude determination.

ACMs are used for measuring delta-V of spacecraft.

RCS is a mono-propellant / controlled pressure system with hydrazine with ten 2.3N thrusters. OMS is a bi-propellant / controlled pressure system with hydrazine and NTO and has one 500N thruster. RCS / OMS includes five big tanks, two of which are for hydrazine, another two for NTO and one for GHe.

AOCE controls all the sensors and actuators automatically and/or by command. And it collects all the telemetry data from attitude sensors and actuators and sends them to DHU through PIM.

1.2.8 Structure and Thermal Design

Main structure consists of a truss assembly, a base panel and eight side panels. The truss assembly consists of FRP tubes. The base and side panels are sandwich panels with aluminum honeycomb and FRP/aluminum facesheet.

Thermal control system consists of heater control electronics, heaters and passive control devices (paint, blankets, doublers, isolators, thermal conductors and so on).

Table 1.2.1-1 Subsystem Specifications (1/13)

1. Scientific Instruments

1.1 PSA

PSA-XUV/ISA/EIS/ESA

(1)XUV (Extremely Ultra Violet Scanner)

Wave Length	: 304 A°
FOV	: ±5.6°
Detection Efficiency	: 0.3%

(2)ISA (Low Energy Particle Detector for Ion)

Energy Range	: 20eV/q ～ 22keV, 32 Steps
Energy Resolution	: 10 %
FOV	: 6° × 360°
Angular Resolution	: 6° × 6°
Time Resolution	: Spin Period
G-Factor	: $10^{-4}cm^2 \cdot sr \cdot eV/eV$

(3)EIS (Electron and Ion Composition Spectrometer)

FOV	: ±13.1° Corn
Time Resolution	: 1.0ns (TAC)
Type	: Ion-Implanted Type

(4)ESA (Electron Spectrum Analyzer)

Energy Range	: 5 eV ～ 22 keV, 32 Steps
Energy Resolution	: 10 %
FOV	: 6° × 180°
Angular Resolution	: 6° × 6°
Time Resolution	: Spin Period
G-Factor	: $10^{-4}cm^2 \cdot sr \cdot eV/eV$

Table 1.2.1-1 Subsystem Specifications (2/13)

1.2 PWA

PWA-PWS/LFA/WANT

(1)PWS (Plasma Wave and Sounder Experiment)

NPW Rx Frequency	: 20KHz～7MHz	
Band Width	: ±2KHz	
SPW Tx/Rx Frequency	: SPW NORMAL	20KHz～7MHz
	: SPW H	8MHz～10MHz
	: ALT	9MHz
Band Width	: ±2KHz	
Tx Power	: High/Low	600W/60W
ALT Phase Accuracy	: 5° (Resolution : 1.4°)	
NEI Capacity	: 1pF ～ 1000pF	

(2)LFA (Low Frequency Analyzer)

Frequency Range	: OFA	10Hz ～ 30KHz
	: WFC-M	10Hz～1KHz
	: WFC-D	0.1Hz～15Hz

(3)WANT (Wire Antenna)

Length	: 25m(MAIN Body to Tip)×4
Tip Mass	: 20g×4

Table 1.2.1-1 Subsystem Specifications (3/13)

1.3 MPM

MPM-MGF/PET/MST/UVS

(1)MGF (Magnetic Field Measurement)

Measurement Range	: ±65536nT/±1024nT/±256nT/±16nT
Resolution	: 8.0nT/0.125nT/0.016nT/0.002nT (14bits)
Linearity	: $<10^{-3}$

(2)PET (Probe for Electron Temperature)

Measurement Range	: 500 ～ 4000 ° K

(3)MST (Extendible Mast)

Length	: 5m (MGF-S mounted on its tip)

(4)UVS (Ultra Violet Spectrometer)

Spectro Scope Wave Length Range	: 115.0nm ～ 310.0nm
Wave Length Resolution	: 1.5nm
Space Resolution	: 1.43 ° × 0.7 °
FOV	: 0.09 ° × 1.43 °
Photometer Wave Length	: 121.566nm(H Ly α)
	: 121.533nm(D Ly β)
FOV	: 3 ° × 0.5 °

1.4 MIC (Mars Imaging Camera)

FOV	: 53 °
Resolution	: 82.6"
CCD	: 5000 Pixel

Table 1.2.1-1 Subsystem Specifications (4/13)

1.5 TPA (Thermal Plasma Analyzer)

Particles Detected	: Electrons AND Ions
Energy Resolution	: $\Delta E/E = 0.1$
Mass Resolution	: $\Delta M/M = 0.2/\ M$
Angular Resolution	: $\Delta\theta = \Delta\phi = 0.05$rad
Temporal Resolution	:1/4 spin period (Complete 3D Distribution)
	: 0.01 sec (Parameterized Distribution)

1.6 IMI

Max. Energy Range	: 0.5～40000eV/e , 64 Steps
Energy Resolution	: 0.07 (FWHM)
Angular Resolution	: El.=5° ,Az.=11° (32Directions)(FWHM)
FOV	: 5° ×360°
Mass Range	: 1～10^{12} Amu/e
Mass Resolution	: m/Δm=6～1 (HOT), 4～30 (COLD)
Time Resolution	: 1/2 Spin Period →Full 3D Distribution
Conversion Factor	: CF(11°) 1×10^{-4} (cm2srkeV/keV)
	: CF(360°) 3.2×10^{-3} (cm2srkeV/keV)
Dynamic Range	: 0.1～10^{6} cts/s (Full Particle Image)

1.7 MDC (Mars Dust Counter)

Minimum Velocity	: 1 km/sec

1.8 NMS (Neutral Mass Spectrometer)

Sensitibity	: $1\times\ 10^{-3}$ (counts/sec)/(part/cm3)
Density/Mass Range	: 16-10^{12} (cm^{-3}) : 1-60(amu)
Scan Type	: 1)Selected masse, 2)Mass scan, 3)RPA sweep

Table 1.2.1-1 Subsystem Specifications (5/13)

1.9 USO (Ultra Stable Oscillator)

Output Frequency	: 19.11574(MHz)
Allan Variance, Tau(s)	: 0.1 $<3\times10^{-12}$,1 $<4\times10^{-13}$
	: 10 $<3\times10^{-13}$,100 $<4\times10^{-13}$
	: 1000 $<4\times10^{-13}$

Table 1.2.1-1 Subsystem Specifications (6/13)

2. Electrical Power Subsystem

2.1 SCP (Solar Cell Paddle)

Paddle Type	: 3 Rigid Panels × 2 Wings
Generating Power	: 200 W min. (Solar Range 2.5AU, θ s=45 °)
Cell Type	: 20×40mm 100 μ m t Si
Cover Glass Type	: 100 μ mt Conductive Coating Cover Glass
Cell Efficiency	: 16.8%
Paddle Size	: 4.584 m² (1m×2.3m×2 Wings)

2.2 BAT (Battery)

Cell Type	: Ni-MH 15AH CELL
BAT Configuration	: 16 Cells Series ×2 Units
DOD Limitation	: nominal 20% , max 64%
BAT Efficiency	: 1 / 1.05

2.3 PCU (Power Control Unit) & DIST (Distributor)

Bus Voltage : 16.3 V ～ 27.5 V
Under Voltage Control(UVC)
Over Voltage Control(OVC)
Power Bus Distribution : 14 Lines
Power Bus Switch : 13 Lines
IP/PC and GP signal Distribution
Each Line Current Monitor /Limitation & ON/OFF Control
Charge/Discharge Control : High Rate Charge 3.0 A (1/10C)
: Trickle Charge 0.41 A (1/70C)
Battery Reconditioning
C/D Counter
Battery Voltage & Charge/Discharge Current Monitor
Boostup Converter : 24.5V ± 0.5V

2.4 PSU (Power Supply Unit)

2nd Power Source Regulation
Output Voltage :+5V、±12V、+29V

2.5 SHNT (Shunt Dissipater)

Type	: Analog Sequential · Partial Shunt (2 units)
Capacity	:600W max. (full shunt)

Table 1.2.1-1 Subsystem Specifications (7/13)

3. Communication Subsystem

3.1 HGA-S、X (S/X-band High Gain Antenna)

Type	: φ1.6m Parabolic Mesh Antenna
Gain	: S-Tx 27.8 dBi min. (peak)/±2.7° (-3dB)
	: X-Tx 37.7 dBi min. (peak)/±0.75° (-3dB)

3.2 LGA-A、B (S-band Low Gain Antenna)

Type	: Crossed Dipole
Gain	: 0 dBi min. (±45°), -10 dBi min. (±90°)

3.3 SSW-A、B (S-band Switch)

Insertion Loss	: 0.2 dB max.

3.4 SDIP-A、B (S-band Diplexer)

Insertion Loss	: 1.0 dB max. (Tx)/0.9 dB max. (Rx)

3.5 SBR-A、B (S-band Receiver)

Frequency	
Signal	: Command and/or RNG
Noise Figure	: 2.6 dB
Demodulation	: PM→PSK (Refer to next page)

3.6 TMS (S-band Transmitter)

Frequency	
Tx Power	: 4.0W (High)
	: 0.1W (Low)
Signal	: TLM and/or RNG
Modulation	: PM (Refer to next table)

3.7 TMX (X-band Transmitter)

Frequency	
Output Power	: 15mW (11dBm)
Signal	: TLM and/or RNG
Modulation	: PM (Ref er to next page.)

3.8 XPA (X-band Power Amplifier)

Power Amplification	: 15mW → 5.8W (37.8dBm)

Table 1.2.1-1 Subsystem Specifications (8/13)

Transmission Signal Details

LINK (BAND)	SIGNAL	BIT RATE (bps)	MOD. FORM	SUBCARRIER FREQ.	MOD. INDEX (rad)	CODING
UP (S)	CM	15.625 / 125	PCM-PSK-PM	4000Hz	0.6 (CM) 0.5(CM/RNG)	
	RNG	516kHz	TONE-PM		1.2 (RNG) 0.7 (CM/RNG)	
DOWN (S)	TLM	64-1024	PCM-PSK-PM	8192Hz	1.18	Convolution+RS
		2048-32768	PCM-PM		1.22	
	RNG	516kHz	TONE-PM		0.5	
DOWN (X)	TLM	64-1024	PCM-PSK-PM	8192Hz	1.22	Convolution+RS
		2048-32768	PCM-PM		1.22	
	RNG	516kHz	TONE-PM		0.9	

Table 1.2.1-1 Subsystem Specifications (9/13)

4. Command and Data Handling Subsystem

4.1 CMD (Command Decoder)

Bit Rate	: 15.625/125 bps
Demodulation	: PSK→PCM

4.2 DHU (Data Handling Unit)

Function with PIM :

Individual Command Operation	DC :	252 items/PIM
	BC :	255 bytes/Command Block
Organized Command Operation	OP :	1 (1 OP=512 OG)
	OG :	256 (1 OG=16 Command Block)
Onboard Command Generation	: Command Broadcasting	
	: Autonomous OG 8	
	: Request OG 16	
Onboard Memory Handling	: Onboard Verification	
	: Memory Damp / Rewriting	
Packet Telemetry Handling	: 432 bytes /packets	
	: Bit Rate and Edition Format Control	
	: DR Control	
Modulation and Coding	: Refer to the table in previous page.	
Back-up File Memory	: Onboard Program strage	
	: 512 kbytes IC Memory	

4.3 PIM (Peripheral Interface Module)

DHU-PIM	: Serial Interface
PIM-USER	: Parallel Interface

4.4 DR (Data Recorder)

Function	: Record, Repro, Simultaneous Rec/Rep
Type	: 134 Mbits IC Memory
Data Rate	: 65 kbps max. (REC)
	: 32 kbps max. (REPRO)

Table 1.2.1-1 Subsystem Specifications (10/13)

4.6 TCI (Telemetry Command Interface)

Function	: TLM/CMD Interface for Com. S/S components and EPT/INS

Table 1.2.1-1 Subsystem Specifications (11/13)

5. Launch Operation & Environment Measurement Subsystem

5.1 EPT-SA (Electrical Programmable Timer-Satellite)

Function : Signal/Command Generation to Igniter/INS-SA in accordance with planned sequence

5.2 INS-SA (Instrument-Satellite)

Function : Launch Environment Measurement of Kick Motor and Spacecraft

5.3 SPM(Solar Particle Monitor)

Function : counter of solar particle having high energy

5.4 IG-PS (Power Supply for Igniter)

Function : Condenser Bank for Ignite System

Table 1.2.1-1 Subsystem Specifications (12/13)

6. Attitude and Orbit Control System

6.1 AOCE (Attitude & Orbit Control Electronics)

Function : Attitude Sensor control & Data Processing
: RCS/OMS Drive/Control
: Spin(Axis Direction/Rate) Control
: Delta-V Control
Active Nutation Control
: Auto Earth Pointing
: Earth Re-orientation
: Abnormal Condition Detection

6.2 SAS (Sun Aspect Sensor)

FOV : 170° ±2° (Two Fan Beam Type)
Resolution : Better than 0.02°

6.3 SSC (Star Scanner)

FOV : φ72° (Primary), φ110° (Secondary)
Detector : Photo Diodes Resolution : 10 Arcmin

6.4 GRS (Gas Rate sensor)

Range : ±100° /sec

6.5 ACM-A~D (Accelerometer)

	Purpose	Full Scale
ACM-A/B	: RCS ΔV	±8mG
ACM-C	: M-V 4th Stage ΔV	±500mG
ACM-D	: OMS ΔV	±20G

6.6 ND (Nutation Damper)

Type : Hoop with Silicon Oil

Time Constant : T.B.D.

Table 1.2.1-1 Subsystem Specifications (13/13)

7. Propulsion Subsystem

7.1 RCS (Reaction Control System)

Type	: Mono Propellant / Pressure Control System
Fuel/Gas	: N2H4/GHe
Tank	: Common Use with OMS System
Thrusters	: 2.3N × 10 (Axial × 4、Radial × 2、Tangential × 4)

7.2 OMS (Orbit Maneuvering System)

Type	: Bi Propellant / Pressure Control System
Fuel/Gas	: N2H4、NTO/GHe
TANK	: N2H4 Tank(Tear Drop) × 2
	: NTO Tank(Tear Drop) × 2 : GHe Tank(Sphere) × 1

8. Structural Subsystem

8.1 STR (Structure)

Shape : Octagonal Pole M-V Interface : 4-Separation Bolts

Primary Structure : Truss and Deck Component Panel : 8-Side Panels, Deck

8.2 MINT (Mechanical Integration)

Brackets for Components, Fasteners for Component Installation,
Balance Weight

9. Thermal Control Subsystem

9.1 HCE (Heater Control Electronics)

Function	: Active Thermal Control with Heaters
Control Channel	: 40ch

9.2 TINT (Thermal Integration)

Function	: Passive Thermal Control
Control Method	: MLI, Radiators, Paint, Thermal Dissipater/ Isolators

10. Wire Harness

Main Harness (Power, Data Bus)

Connector Type	: MDM / Dsub
Wire Material	: Cu, BeCu, Al
Co-axial Cable	:for RF Signal, a part of Cable between SI

1.3 Spacecraft Properties

I.Nakatani(ISAS)
NEC Corporation

1.3.1 Mass

PLANET-B WEIGHT OF SUBSYSTEMS (1/3)

(UNIT:kg)

S/S NAME	UNIT NAME	WEIGHT	REMARK
SCIENTIFIC INSTRUMENTS		**36.093**	
PSA	**(TOTAL)**	**6.230**	
	PSA-E	2.260	
	ESA-S	1.038	
	ISA-S	1.037	
	EIS-S	1.045	
	XUV-S	0.850	
PWA	**(TOTAL)**	**8.106**	
	PWA-E	5.248	
	WANT 1-4	2.858	
	WANT-P-1-4	↑	
MPM	**(TOTAL)**	**8.52**	
	MPM-E	2.72	
	MGF-S	→MST	
	PET-S	0.25	
	MST	3.00	
	UVS-P/G	2.55	
MIC	**(TOTAL)**	**2.984**	
	MIC	2.984	
TPA	**(TOTAL)**	**3.274**	
	TPA-E	1.234	
	TPA-S	2.040	
IMI	**(TOTAL)**	**2.988**	
	IMI-E	2.988	
	IMI-S	↑	
MDC	**(TOTAL)**	**0.734**	
	MDC	0.734	
NMS	**(TOTAL)**	**2.802**	
	NMS	2.802	
USO	USO	0.458	

PLANET-B WEIGHT OF SUBSYSTEMS (2/3)

(UNIT:kg)

S/S NAME	UNIT NAME	WEIGHT	REMARK
COMMON INSTRUMENTS		**220.871**	
POWER S/S		**43.695**	
SCP	PDL	20.240	
	CELL	↑ PDL	
BAT	BAT-A,B	16.943	
PCD	PCU	2.845	
	DIST	2.118	
SHNT	SHNT-A,B	0.723	
PSU	PSU-3, XPA-PS	0.826	
COMMUNICATION S/S		**11.727**	
HGA	**(TOTAL)**	**5.793**	
	HGA	5.793	
	LGA-A	↑ HGA	
	XPA	↑ HGA	
	INT	↑ HGA	
LGA	LGA-B	0.246	
SBR	SBR-A,B	2.657	
TMS	TMS	0.977	
TMX	TMX	1.289	
SDIP	SDIP-A,B	0.622	
SSW	SSW-A,B	0.143	
COMMAND,DATA S/S		**10.003**	
CMD	CMD	1.970	
DHS	DHU	4.052	
	PIM	0.878	
DR	DR	1.105	
TCI	TCI	1.998	
LAUNCH OPERATION S/S		**3.573**	
EPT-SA	EPT-SA	1.611	
INS-SA	INS-SA	1.767	With Cables
IG-PS	IG-PS	0.118	
SPM	SPM	0.077	

PLANET-B WEIGHT OF SUBSYSTEMS (3/3)

(UNIT:kg)

S/S NAME	UNIT NAME	WEIGHT	REMARK
AOCS		**11.685**	
AOCE	AOCE	6.389	
SAS	SAS	1.147	
SSC	SSC	2.062	
GRS	GRS-A/B	0.191	
ACM	ACM-A/B/C/D	0.652	
ND	ND	1.244	
PROPULSION S/S		**61.930**	
RCS/OMS	RCS	61.930	
	OMS	↑ RCS	
	MINT/TINT	↑ RCS	
WIRE HARNESS		**14.245**	
WHN	WHN	14.245	
STRUCTURE		**56.735**	
STR	STR	50.535	
MINT	MINT	↑	
	BALANCE WT	6.200	
THERMAL		7.279	
HCE	HCE	2.722	
TINT	TINT	4.557	
CONTINGENCY		**3.536**	
TOTAL AMOUNT	DRY	260.50	
	FUEL(N2H4) FUEL(NTO)	279.50 ↑	
	WET	**540.00**	

1.3.2 Moment of Inertia

PLANET-B MOMENT OF INERTIA ($kg \cdot m^2$)

Phase	Fuel	I_X	I_Y	I_Z
S/C separation	Full	99.7	122.5	179.3
After deployment of PDL	Full	102.8	199.8	253.6
Trans-Mars-Orbit Insertion	Consumption N_2H_4=77.33kg NTO=37.13kg	94.0	191.0	239.0
Mars-Orbit Insertion	Consumption N_2H_4=165.66kg NTO=99.95kg	75.8	172.7	206.8
End of Life After deployment of MAST,TPA-S,WANT	Empty	139.0	205.7	303.1

Table1.3.3-1 Power Consumption of each Subsystem (1/4)

S/S Name	S/S Mode	S/S Power (W)	S/S Current (mA)							PS Eff. (%)	Bus Power		Remark
			2nd Voltage					Bus Voltage			+19V (W)	+27V (W)	
			+5V	+12V	-12V	+15V	+29V	+19V	+27V				
PSA	STBY1(CPU+H32)	5.12	790	34	25	0	0	0	0	40	12.81	12.81	PSU2-1 (S/N=1)
	ALL HV/SV ON	17.94	1185	557	308	0	0	0	0	60	29.89	29.89	
PWA	STBY(CPU ON)	2.32	350	30	0	0	0	0	0	30	7.74	7.74	PSU2-2 (S/N=1)
	LFA+ALT+WANT P	28.08	600	895	520	0	200	0	0	70	40.11	40.11	
	LFA+SPW+WANT P	24.80	580	815	510	0	135	0	0	70	35.43	35.43	
	LFA+NPW+WANT P	19.59	585	755	485	0	0	0	0	70	27.98	27.98	
	LFA+NEI+NEI P	21.27	580	845	525	0	0	0	0	70	30.39	30.39	
	WANT DRV ON+MONI ON	4.12	600	24	38	0	0	339	500	45	15.60	23.15	
MPM	STBY(CPU ON)	5.53	465	116	109	0	0	0	0	50	11.06	11.06	PSU2-2 (S/N=2)
	MGF/PET ON	8.00	470	226	184	0	0	0	0	55	14.54	14.54	
	MGF/PET/MST DRV ON	8.69	490	248	206	0	0	136	200	60	17.06	20.08	
	MGF/PET/UVS ON	14.77	847	398	368	0	0	0	0	65	22.72	22.72	
	MGF/PET ON +UVS UV	15.21	847	420	379	0	0	0	0	65	23.39	23.39	
	MGF/PET ON +UVS PM	23.57	847	422	382	0	272	0	0	70	33.67	33.67	
	MGF/PET ON +UVS UV/PM	23.86	847	433	393	0	272	0	0	70	34.08	34.08	
MIC	STBY(CPU ON)	3.15	480	0	0	33	0	0	0	41	7.68	7.68	PSU1-2 (S/N=2)
	IMAGING	10.64	920	0	0	360	0	0	0	74	14.31	14.31	
TPA	SLEEP	0.00	0	0	0	0	0	103	70	100	1.95	1.95	3.92W @Boot
	DEPLOY	0.00	0	0	0	0	0	655	445	100	12.45	12.45	
	IDLE (TLM)	0.00	0	0	0	0	0	99	67	100	1.88	1.88	
	MEAS (ACTIVE)	0.00	0	0	0	0	0	464	315	100	8.82	8.82	7.78W @MEAS(STBY)
IMI	STBY(CPU ON)	0.00	0	0	0	0	0	574	343	100	10.90	9.60	
	HV ON	0.00	0	0	0	0	0	674	411	100	12.80	11.50	
MDC	STBY(HV OFF)	0.00	0	0	0	0	0	158	107	100	3.00	3.00	
	HV ON	0.00	0	0	0	0	0	163	111	100	3.10	3.10	
NMS	SLEEP	0.00	0	0	0	0	0	421	286	100	8.00	8.00	
	MEASURE	0.00	0	0	0	0	0	737	500	100	14.00	14.00	
USO	OFF	0.00	0	0	0	0	0	0	0	65	0.00	0.00	
	ON	0.50	0	38	0	0	0	0	0	65	0.77	0.77	

Table-1.3.3-1 Power Consumption of each Subsystem (2/4)

S/S Name	S/S Mode	S/S Power (W)	S/S Current (mA) 2nd Voltage +5V	+12V	-12V	+15V	+29V	Bus Voltage +19V	+27V	PS Eff. (%)	Bus Power +19V (W)	+27V (W)	Remark
PCD	ON	4.87	180	0	0	250	0	0	0	60	8.11	8.11	PSU1-2 (S/N=1)
SBR	SBR-A /B ON	12.27	670	550	100	0	0	0	0	70	17.52	17.52	PSU3
CMD	ON	2.13	100	120	0	0	0	0	0	70	3.05	3.05	
TMS	OFF	0.14	25	0	0	0	0	0	0	70	0.20	0.20	
	ON (HIGH PWR)	19.48	25	1390	75	0	0	0	0	70	27.82	27.82	
TMX	OFF	0.16	25	1	1	0	0	0	0	70	0.23	0.23	
	ON	2.69	105	85	75	0	0	0	0	70	3.84	3.84	
XPA	RF OFF	13.57	0	VD/VG	(+7/-7V)	1950	12	0	0	65	20.87	20.87	XPA-PS
	RF ON	21.62	0	VD/VG	(+7/-7V)	3100	12	0	0	65	33.26	33.26	
DHU	CPU OFF	3.87	0	0	0	0	0	0	0	70	5.54	5.54	PSU1-1
	CPU A ON	4.54	0	0	0	0	0	0	0	70	6.48	6.48	
	CPU A/B ON	4.91	0	0	0	0	0	0	0	65	7.56	7.56	
TCI	ON	4.23	200	58	20	0	69	0	0	65	6.51	6.51	PSU2-2
DR	OFF	0.74	135	0	0	0	0	0	0	65	1.14	1.14	*TCI+PSU-Loss
	STANDBY	2.09	380	0	0	0	0	0	0	65	3.22	3.22	9.02
	REC	2.09	380	0	0	0	0	0	0	65	3.22	3.22	
	REC/REPRO	2.26	410	0	0	0	0	0	0	65	3.47	3.47	
HCE	ON (Heater All Off)	2.32	150	60	60	0	0	0	0	65	3.57	3.57	
	ON (Heater All On)	2.32	150	60	60	0	0	0	0	65	3.57	3.57	
EPT-SA	ON (Signal Out)	6.35	0	500	0	0	0	0	0	65	9.77	9.77	1W @ON(Count)
INS-SA	INS 2 ON	4.60	5	210	150	0	0	0	0	65	7.07	7.07	2.6W @INS1-ON
SPM	ON	0.08	0	4	0	0	1	0	0	65	0.13	0.13	
AOCE	CPU-A ON	8.69	740	150	200	0	0	0	0	62	14.00	14.00	PSU4
	CPU-A/B ON	11.11	1180	150	200	0	0	0	0	69	16.00	16.00	
SAS	SAS-A/B ON	0.00	0	0	0	0	0	73	49	100	1.38	1.38	

Table-1.3.3-1 Power Consumption of each Subsystem (3/4)

S/S Name	S/S Mode	S/S Power (W)	S/S Current (mA)							PS Eff. (%)	Bus Power		Remark
			2nd Voltage					Bus Voltage			+19V (W)	+27V (W)	
			+5V	+12V	-12V	+15V	+29V	+19V	+27V				
SSC	ON	0.43	3	18	14	0	0	0	0	70	0.61	0.61	
ACM	ACM-A/B ON	0.90	0	30	38	0	0	0	0	70	1.28	1.28	
	ACM-C ON	0.53	0	20	20	0	0	0	0	70	0.75	0.75	
	ACM-D ON	0.92	0	45	25	0	0	0	0	70	1.32	1.32	
GRS	GRS-A/B ON	1.72	120	40	40	0	0	0	0	70	2.45	2.45	
RCS/OMS	RCS ON (2 thrusters)	24.40	0	0	0	0	800	0	0	70	34.86	34.86	
	OMS ON (NTO, N2H4)	65.21	0	0	0	0	2138	0	0	70	93.16	93.16	
	LV OP/CL (1 valve)	36.84	0	0	0	0	1208	0	0	70	52.63	52.63	30W for LV-M

Table-1.3.3-1 Power Consumption of each Subsystem (4/4)

S/S Name	S/S Mode	S/S R (Ohm)	S/S Current (mA) 2nd Voltage +5V	+12V	-12V	+15V	+29V	Bus Voltage +19V	+27V	PS Eff. (%)	Bus Power +19V (W)	+27V (W)	Remark
SI HTR	EIS HTR ON	179	0	0	0	0	0	106	156	100	2.02	4.38	
	XUV HTR ON	119	0	0	0	0	0	160	235	100	3.03	6.59	
	SPW HTR ON	-	0	0	0	0	60	0	0	70	2.61	2.61	
	MST HTR ON	193	0	0	0	0	0	98	145	100	1.87	4.06	
	UVS HTR ON	TBD	0	0	0	0	0	TBD	TBD	100	0.00	0.00	
	MIC HTR ON	TBD	0	0	0	0	0	TBD	TBD	100	0.00	0.00	
CI HTR(A)	NTNK1	77	0	0	0	0	0	247	365	100	4.70	10.21	NTNK2 (Redundant)
	RCSPIP2	160	0	0	0	0	0	119	175	100	2.25	4.89	
	RCSPIP4	69	0	0	0	0	0	274	403	100	5.20	11.30	
	VLVMB	107	0	0	0	0	0	178	262	100	3.38	7.35	T - 5W, A, R - 10W
	VLVMC	126	0	0	0	0	0	150	222	100	2.86	6.20	
	EMA1	47	0	0	0	0	0	407	600	100	7.73	16.79	EMA2 (Redundant)
	BAT-A SUNLIT	67	0	0	0	0	0	284	418	100	5.39	11.70	
	BAT-A SHADOW	67	0	0	0	0	0	284	418	100	5.39	11.70	
	SSCBLK	63	0	0	0	0	0	300	442	100	5.70	12.37	
(B)	HTNK1	34	0	0	0	0	0	564	831	100	10.71	23.26	HTNK2 (Redundant)
	GTNK1	130	0	0	0	0	0	146	215	100	2.77	6.03	GTNK2 (Redundant)
	RCSPIP1	59	0	0	0	0	0	322	475	100	6.13	13.30	
	RCSPIP3	54	0	0	0	0	0	354	521	100	6.72	14.60	
	RCSPIP5	69	0	0	0	0	0	276	407	100	5.24	11.38	
	VLVMA	106	0	0	0	0	0	179	264	100	3.40	7.38	
	OMEVLV1	66	0	0	0	0	0	289	426	100	5.50	11.94	OMEVLV2 (Redundant)
	EMB1	45	0	0	0	0	0	421	621	100	8.00	17.37	
	BAT-B SUNLIT	67	0	0	0	0	0	284	418	100	5.39	11.70	
	BAT-B SHADOW	67	0	0	0	0	0	284	418	100	5.39	11.70	
	THR_BED	23	0	0	0	0	0	826	1217	100	15.70	34.09	A OR T (R=46 ohm)
	OME_INJECTION	19	0	0	0	0	0	1000	1474	100	19.00	41.26	

Table1.3.3-2 Power Budget for each Steady State Mode (1/4)

S/S Name	S/S Mode	Mars Orbit										
		Sunlit							Shadow			
		WNT DPL	MST DEP	TPA DPL	STBY	REC	REP	REAL	STBY	REC	REP	REAL
PSA	STBY1(CPU+H32)	# 12.81	# 12.81	# 12.81	# 12.81	0.00	# 12.81	0.00	# 12.81	0.00	# 12.81	0.00
	ALL HV/SV ON	0.00	0.00	0.00	0.00	# 29.89	0.00	# 29.89	0.00	# 29.89	0.00	# 29.89
PWA	STBY(CPU ON)	0.00	# 7.74	# 7.74	# 7.74	0.00	# 7.74	0.00	# 7.74	0.00	# 7.74	0.00
	LFA+ALT+WANT_P	0.00	0.00	0.00	0.00	0.00	0.00	0.00	0.00	0.00	0.00	0.00
	LFA+SPW+WANT_P	0.00	0.00	0.00	0.00	# 35.43	0.00	# 35.43	0.00	# 35.43	0.00	# 35.43
	LFA+NPW+WANT_P	0.00	0.00	0.00	0.00	0.00	0.00	0.00	0.00	0.00	0.00	0.00
	LFA+NEI+NEI_P	0.00	0.00	0.00	0.00	0.00	0.00	0.00	0.00	0.00	0.00	0.00
	WANT DRV ON+MONI ON	# 23.15	0.00	0.00	0.00	0.00	0.00	0.00	0.00	0.00	0.00	0.00
MPM	STBY(CPU ON)	# 11.06	0.00	# 11.06	# 11.06	0.00	# 11.06	0.00	# 11.06	0.00	# 11.06	0.00
	MGF/PET ON	0.00	0.00	0.00	0.00	0.00	0.00	0.00	0.00	0.00	0.00	0.00
	MGF/PET/MST DRV ON	0.00	# 20.08	0.00	0.00	0.00	0.00	0.00	0.00	0.00	0.00	0.00
	MGF/PET/UVS ON	0.00	0.00	0.00	0.00	0.00	0.00	0.00	0.00	0.00	0.00	0.00
	MGF/PET ON +UVS UV	0.00	0.00	0.00	0.00	0.00	0.00	0.00	0.00	0.00	0.00	0.00
	MGF/PET ON +UVS PM	0.00	0.00	0.00	0.00	0.00	0.00	0.00	0.00	0.00	0.00	0.00
	MGF/PET ON +UVS UV/PM	0.00	0.00	0.00	0.00	# 34.08	0.00	# 34.08	0.00	# 34.08	0.00	# 34.08
MIC	STBY(CPU ON)	# 7.68	# 7.68	# 7.68	# 7.68	# 7.68	# 7.68	# 7.68	# 7.68	# 7.68	# 7.68	# 7.68
	IMAGING	0.00	0.00	0.00	0.00	0.00	0.00	0.00	0.00	0.00	0.00	0.00
TPA	SLEEP	# 1.95	# 1.95	0.00	0.00	0.00	0.00	0.00	0.00	0.00	0.00	0.00
	DEPLOY	0.00	0.00	# 12.45	0.00	0.00	0.00	0.00	0.00	0.00	0.00	0.00
	IDLE (TLM)	0.00	0.00	0.00	# 1.88	0.00	# 1.88	0.00	# 1.88	0.00	# 1.88	0.00
	MEAS (ACTIVE)	0.00	0.00	0.00	0.00	# 8.82	0.00	# 8.82	0.00	# 8.82	0.00	# 8.82
IMI	STBY(CPU ON)	# 9.60	# 9.60	# 9.60	# 9.60	0.00	# 9.60	0.00	# 10.90	0.00	# 10.90	0.00
	HV ON	0.00	0.00	0.00	0.00	# 11.50	0.00	# 11.50	0.00	# 12.80	0.00	# 12.80
MDC	STBY(HV OFF)	# 3.00	# 3.00	# 3.00	# 3.00	0.00	# 3.00	0.00	# 3.00	0.00	# 3.00	0.00
	HV ON	0.00	0.00	0.00	0.00	# 3.10	0.00	# 3.10	0.00	# 3.10	0.00	# 3.10
NMS	SLEEP	# 8.00	# 8.00	# 8.00	# 8.00	0.00	# 8.00	0.00	# 8.00	0.00	# 8.00	0.00
	MEASURE	0.00	0.00	0.00	0.00	# 14.00	0.00	# 14.00	0.00	# 14.00	0.00	# 14.00
USO	OFF	# 0.00	# 0.00	# 0.00	# 0.00	# 0.00	# 0.00	# 0.00	# 0.00	# 0.00	# 0.00	# 0.00
	ON	0.00	0.00	0.00	0.00	0.00	0.00	0.00	0.00	0.00	0.00	0.00
SI Total (W)		77.25	70.86	72.34	61.76	144.50	61.76	144.50	63.06	145.80	63.06	145.80

note) Mark "#" indicates the using mode in each operation

Table1.3.3-2 Power Budget for each Steady State Mode (2/4)

S/S Name	S/S Mode	Mars Orbit															
		Sunlit							Shadow								
		WNT DPL		MST DEP		TPA DPL		STBY		REC		REP		REAL	STBY	REC	REP	REAL
PCD	ON	#	8.11	#	8.11	#	8.11	#	8.11	#	8.11	#	8.11	#	8.11	#	8.11	#	8.11	#	8.11
SBR	SBR-A /B ON	#	17.52	#	17.52	#	17.52	#	17.52	#	17.52	#	17.52	#	17.52	#	17.52	#	17.52	#	17.52
CMD	ON	#	3.05	#	3.05	#	3.05	#	3.05	#	3.05	#	3.05	#	3.05	#	3.05	#	3.05	#	3.05
TMS	OFF		0.00		0.00		0.00	#	0.20	#	0.20		0.00		0.00		0.00	#	0.20		0.00		0.00
	ON (HIGH PWR)	#	27.82	#	27.82	#	27.82		0.00		0.00	#	27.82	#	27.82	#	27.82		0.00	#	27.82	#	27.82
TMX	OFF		0.00		0.00		0.00	#	0.23	#	0.23		0.00		0.00	#	0.23	#	0.23		0.00		0.00
	ON	#	3.84	#	3.84	#	3.84		0.00		0.00	#	3.84	#	3.84		0.00		0.00	#	3.84	#	3.84
XPA	RF OFF		0.00		0.00		0.00	#	20.87	#	20.87		0.00		0.00	#	20.87	#	20.87		0.00		0.00
	RF ON	#	33.26	#	33.26	#	33.26		0.00		0.00	#	33.26	#	33.26		0.00		0.00	#	33.26	#	33.26
DHU	CPU OFF		0.00		0.00		0.00		0.00		0.00		0.00		0.00		0.00		0.00		0.00		0.00
	CPU A ON	#	6.48	#	6.48	#	6.48	#	6.48	#	6.48	#	6.48	#	6.48		0.00		0.00		0.00		0.00
	CPU A/B ON		0.00		0.00		0.00		0.00		0.00		0.00		0.00	#	7.56	#	7.56	#	7.56	#	7.56
TCI	ON	#	6.51	#	6.51	#	6.51	#	6.51	#	6.51	#	6.51	#	6.51	#	6.51	#	6.51	#	6.51	#	6.51
DR	OFF		0.00		0.00		0.00		0.00		0.00		0.00		0.00		0.00		0.00		0.00		0.00
	STANDBY		0.00		0.00		0.00	#	3.22		0.00		0.00		0.00	#	3.22		0.00		0.00		0.00
	REC	#	3.22	#	3.22	#	3.22		0.00	#	3.22		0.00		0.00		0.00	#	3.22		0.00		0.00
	REC/REPRO		0.00		0.00		0.00		0.00		0.00	#	3.47	#	3.47		0.00		0.00	#	3.47	#	3.47
HCE	ON (Heater All Off)		0.00		0.00		0.00		0.00		0.00		0.00		0.00		0.00		0.00		0.00		0.00
	ON (Heater All On)	#	3.57	#	3.57	#	3.57	#	3.57	#	3.57	#	3.57	#	3.57	#	3.57	#	3.57	#	3.57	#	3.57
EPT-SA	ON (Signal Out)		0.00		0.00		0.00		0.00		0.00		0.00		0.00		0.00		0.00		0.00		0.00
INS-SA	INS 2 ON		0.00		0.00		0.00		0.00		0.00		0.00		0.00		0.00		0.00		0.00		0.00
SPM	ON	#	0.13	#	0.13	#	0.13	#	0.13	#	0.13	#	0.13	#	0.13	#	0.13	#	0.13	#	0.13	#	0.13
AOCE	CPU-A ON		0.00		0.00		0.00		0.00		0.00		0.00		0.00	#	14.00	#	14.00	#	14.00	#	14.00
	CPU-A/B ON	#	16.00	#	16.00	#	16.00	#	16.00	#	16.00	#	16.00	#	16.00		0.00		0.00		0.00		0.00
SAS	SAS-A/B ON	#	1.38	#	1.38	#	1.38	#	1.38	#	1.38	#	1.38	#	1.38	#	1.38	#	1.38	#	1.38	#	1.38

note) Mark "#" indicates the using mode in each operation

Table1.3.3-2 Power Budget for each Steady State Mode (3/4)

S/S Name	S/S Mode	Mars Orbit										
		Sunlit							Shadow			
		WNT DPL	MST DEP	TPA DPL	STBY	REC	REP	REAL	STBY	REC	REP	REAL
SSC	ON	# 0.61	# 0.61	# 0.61	# 0.61	# 0.61	# 0.61	# 0.61	# 0.61	# 0.61	# 0.61	# 0.61
ACM	ACM-A/B ON	# 1.28	# 1.28	# 1.28	# 1.28	# 1.28	# 1.28	# 1.28	# 1.28	# 1.28	# 1.28	# 1.28
	ACM-C ON	0.00	0.00	0.00	0.00	0.00	0.00	0.00	0.00	0.00	0.00	0.00
	ACM-D ON	0.00	0.00	0.00	0.00	0.00	0.00	0.00	0.00	0.00	0.00	0.00
GRS	GRS-A/B ON	0.00	0.00	0.00	0.00	0.00	0.00	0.00	0.00	0.00	0.00	0.00
RCS/OMS	RCS ON (2 thrusters)	0.00	0.00	0.00	0.00	0.00	0.00	0.00	0.00	0.00	0.00	0.00
	OMS ON (NTO, N2H4)	0.00	0.00	0.00	0.00	0.00	0.00	0.00	0.00	0.00	0.00	0.00
	LV OP/CL (1 valve)	0.00	0.00	0.00	0.00	0.00	0.00	0.00	0.00	0.00	0.00	0.00
CI Total (W)		132.78	132.78	132.78	89.16	89.16	133.03	133.03	115.86	88.24	132.11	132.11

note) Mark "#" indicates the using mode in each operation

Unit:W

ITEM	(Remarks)	Mars Orbit										
		Sunlit							Shadow			
		WNT DPL	MST DEP	TPA DPL	STBY	REC	REP	REAL	STBY	REC	REP	REAL
Scientific Instrument (SI)		77.25	70.86	72.34	61.76	144.50	61.76	144.50	63.06	145.80	63.06	145.80
Common Instrument (CI)		132.78	132.78	132.78	89.16	89.16	133.03	133.03	115.86	88.24	132.11	132.11
SI + CI		210.03	203.64	205.11	150.92	233.66	194.79	277.53	178.92	234.04	195.17	277.91
Heater		103.91	103.91	103.91	103.91	35.02	103.91	35.02	52.41	52.41	52.41	52.41
SI+CI+HTR		313.94	307.55	309.03	254.83	268.68	298.70	312.55	231.33	286.45	247.58	330.32
PCD Loss		4.14	3.97	4.01	2.73	3.03	3.74	4.10	14.83	19.14	16.07	22.80
WHN Loss		0.06	0.06	0.06	0.04	0.04	0.05	0.06	0.21	0.27	0.23	0.33
TOTAL		318.14	311.58	313.09	257.60	271.75	302.50	316.71	246.37	305.87	263.88	353.45

═══ Charge Option Table ═══

Unit:W

	PCD Inclease	LOSS Inclease	Power for Charge	Total Inclease
TRICKLE (1/50C)	-	3.41	12.79	16.20
TRICKLE (1/50C) + SHNT	-	3.41	12.79	16.20
FULL (1/20C)	-	2.64	37.86	40.50

Table1.3.3-2 Power Budget for each Steady State Mode (4/4)

S/S Name	S/S Mode	Mars Orbit																					
		Sunlit														Shadow							
		WNT DPL		MST DEP		TPA DPL		STBY		REC		REP		REAL		STBY		REC		REP		REAL	
		(DTY)	(PWR)	(DTY)	(PWR)	(DTY)	(PWR)	(DTY)	(PWR)	(DTY)	(PWR)	(DTY)	(PWR)	(DTY)	(PWR)	(DTY)	(PWR)	(DTY)	(PWR)	(DTY)	(PWR)	(DTY)	(PWR)
SI HTR	EIS HTR ON	0	0.0	0	0.0	0	0.0	0	0.0	0	0.0	0	0.0	0	0.0	0	0.0	0	0.0	0	0.0	0	0.0
	XUV HTR ON	0	0.0	0	0.0	0	0.0	0	0.0	0	0.0	0	0.0	0	0.0	14	0.4	14	0.4	14	0.4	14	0.4
	SPW HTR ON	0	0.0	0	0.0	0	0.0	0	0.0	0	0.0	0	0.0	0	0.0	0	0.0	0	0.0	0	0.0	0	0.0
	MST HTR ON	0	0.0	0	0.0	0	0.0	0	0.0	0	0.0	0	0.0	0	0.0	0	0.0	0	0.0	0	0.0	0	0.0
	UVS HTR ON	0	0.0	0	0.0	0	0.0	0	0.0	0	0.0	0	0.0	0	0.0	0	0.0	0	0.0	0	0.0	0	0.0
	MIC HTR ON	100	0.0	100	0.0	0	0.0	0	0.0	100	0.0	0	0.0	100	0.0	0	0.9	0	0.9	0	0.9	0	0.9
CI HTR(A)	NTNK1	100	10.2	100	10.2	100	10.2	100	10.2	0	0.0	100	10.2	0	0.0	48	2.3	48	2.3	48	2.3	48	2.3
	RCSPIP2	100	4.9	100	4.9	100	4.9	100	4.9	0	0.0	100	4.9	0	0.0	0	0.0	0	0.0	0	0.0	0	0.0
	RCSPIP4	100	11.3	100	11.3	100	11.3	100	11.3	0	0.0	100	11.3	0	0.0	0	0.0	0	0.0	0	0.0	0	0.0
	VLVMB	100	7.3	100	7.3	100	7.3	100	7.3	0	0.0	100	7.3	0	0.0	61	2.1	61	2.1	61	2.1	61	2.1
	VLVMC	100	6.2	100	6.2	100	6.2	100	6.2	0	0.0	100	6.2	0	0.0	55	1.6	55	1.6	55	1.6	55	1.6
	EMA1	100	16.8	100	16.8	100	16.8	100	16.8	0	0.0	100	16.8	0	0.0	52	4.0	52	4.0	52	4.0	52	4.0
	BAT-A SUNLIT	100	11.7	100	11.7	100	11.7	100	11.7	0	0.0	100	11.7	0	0.0	100	5.4	100	5.4	100	5.4	100	5.4
	BAT-A SHADOW	0	0.0	0	0.0	0	0.0	0	0.0	0	0.0	0	0.0	0	0.0	78	4.2	78	4.2	78	4.2	78	4.2
	SSCBLK	100	12.4	100	12.4	100	12.4	100	12.4	0	0.0	100	12.4	0	0.0	12	0.7	12	0.7	12	0.7	12	0.7
(B)	HTNK1	100	23.3	100	23.3	100	23.3	100	23.3	0	0.0	100	23.3	0	0.0	109	11.7	109	11.7	109	11.7	109	11.7
	GTNK1	100	6.0	100	6.0	100	6.0	100	6.0	0	0.0	100	6.0	0	0.0	0	0.0	0	0.0	0	0.0	0	0.0
	RCSPIP1	100	13.3	100	13.3	100	13.3	100	13.3	0	0.0	100	13.3	0	0.0	0	0.0	0	0.0	0	0.0	0	0.0
	RCSPIP3	100	14.6	100	14.6	100	14.6	100	14.6	0	0.0	100	14.6	0	0.0	0	0.0	0	0.0	0	0.0	0	0.0
	RCSPIP5	100	11.4	100	11.4	100	11.4	100	11.4	100	11.4	100	11.4	100	11.4	0	0.0	0	0.0	0	0.0	0	0.0
	VLVMA	100	7.4	100	7.4	100	7.4	100	7.4	0	0.0	100	7.4	0	0.0	56	1.9	56	1.9	56	1.9	56	1.9
	OMEVLV1	100	11.9	100	11.9	100	11.9	100	11.9	100	11.9	100	11.9	100	11.9	66	3.6	66	3.6	66	3.6	66	3.6
	EMB1	100	17.4	100	17.4	100	17.4	100	17.4	0	0.0	100	17.4	0	0.0	60	4.8	60	4.8	60	4.8	60	4.8
	BAT-B SUNLIT	100	11.7	100	11.7	100	11.7	100	11.7	100	11.7	100	11.7	100	11.7	100	5.4	100	5.4	100	5.4	100	5.4
	BAT-B SHADOW	0	0.0	0	0.0	0	0.0	0	0.0	0	0.0	0	0.0	0	0.0	64	3.5	64	3.5	64	3.5	64	3.5
	THR_BED	0	0.0	0	0.0	0	0.0	0	0.0	0	0.0	0	0.0	0	0.0	0	0.0	0	0.0	0	0.0	0	0.0
	OME_INJECTION	0	0.0	0	0.0	0	0.0	0	0.0	0	0.0	0	0.0	0	0.0	0	0.0	0	0.0	0	0.0	0	0.0

HTR Total (W)	SI+(A)+RCS	80.81	80.81	80.81	80.81	0.00	80.81	0.00	52.41	52.41	52.41	52.41
	SI+(B)+RCS	103.91	103.91	103.91	103.91	35.02	103.91	35.02				

Table1.3.3-3 Power Budget for each Transient Mode (1/4)

S/S Name	S/S Mode	Earth Orbit			Orbit Insertion		Mars Orbit						
		Shadow		Sunlit	Transfer	Mars	Sunlit					Shadow	
		Launch	STBY		Orbit	Orbit	LV	PreHeat	RCS	PreHeat	OMS	RCS	OMS
PSA	STBY1(CPU+H32)	# 12.81	# 12.81	# 12.81	# 12.81	# 12.81	# 12.81	# 12.81	# 12.81	# 12.81	# 12.81	# 12.81	# 12.81
	ALL HV/SV ON	0.00	0.00	0.00	0.00	0.00	0.00	0.00	0.00	0.00	0.00	0.00	0.00
PWA	STBY(CPU ON)	# 7.74	# 7.74	# 7.74	# 7.74	# 7.74	# 7.74	# 7.74	# 7.74	# 7.74	# 7.74	# 7.74	# 7.74
	LFA+ALT+WANT_P	0.00	0.00	0.00	0.00	0.00	0.00	0.00	0.00	0.00	0.00	0.00	0.00
	LFA+SPW+WANT_P	0.00	0.00	0.00	0.00	0.00	0.00	0.00	0.00	0.00	0.00	0.00	0.00
	LFA+NPW+WANT_P	0.00	0.00	0.00	0.00	0.00	0.00	0.00	0.00	0.00	0.00	0.00	0.00
	LFA+NEI+NEI_P	0.00	0.00	0.00	0.00	0.00	0.00	0.00	0.00	0.00	0.00	0.00	0.00
	WANT DRV ON+MONI ON	0.00	0.00	0.00	0.00	0.00	0.00	0.00	0.00	0.00	0.00	0.00	0.00
MPM	STBY(CPU ON)	# 11.06	# 11.06	# 11.06	# 11.06	# 11.06	# 11.06	# 11.06	# 11.06	# 11.06	# 11.06	# 11.06	# 11.06
	MGF/PET ON	0.00	0.00	0.00	0.00	0.00	0.00	0.00	0.00	0.00	0.00	0.00	0.00
	MGF/PET/MST DRV ON	0.00	0.00	0.00	0.00	0.00	0.00	0.00	0.00	0.00	0.00	0.00	0.00
	MGF/PET/UVS ON	0.00	0.00	0.00	0.00	0.00	0.00	0.00	0.00	0.00	0.00	0.00	0.00
	MGF/PET ON +UVS UV	0.00	0.00	0.00	0.00	0.00	0.00	0.00	0.00	0.00	0.00	0.00	0.00
	MGF/PET ON +UVS PM	0.00	0.00	0.00	0.00	0.00	0.00	0.00	0.00	0.00	0.00	0.00	0.00
	MGF/PET ON +UVS UV/PM	0.00	0.00	0.00	0.00	0.00	0.00	0.00	0.00	0.00	0.00	0.00	0.00
MIC	STBY(CPU ON)	# 7.68	# 7.68	# 7.68	# 7.68	# 7.68	# 7.68	# 7.68	# 7.68	# 7.68	# 7.68	# 7.68	# 7.68
	IMAGING	0.00	0.00	0.00	0.00	0.00	0.00	0.00	0.00	0.00	0.00	0.00	0.00
TPA	SLEEP	# 1.95	# 1.95	# 1.95	# 1.95	# 1.95	# 1.95	# 1.00	# 1.95	# 1.95	# 1.95	# 1.95	# 1.95
	DEPLOY	0.00	0.00	0.00	0.00	0.00	0.00	0.00	0.00	0.00	0.00	0.00	0.00
	IDLE (TLM)	0.00	0.00	0.00	0.00	0.00	0.00	0.00	0.00	0.00	0.00	0.00	0.00
	MEAS (ACTIVE)	0.00	0.00	0.00	0.00	0.00	0.00	0.00	0.00	0.00	0.00	0.00	0.00
IMI	STBY(CPU ON)	# 10.90	# 10.90	# 9.60	# 10.90	# 10.90	# 9.60	# 9.60	# 9.60	# 9.60	# 9.60	# 10.90	# 10.90
	HV ON	0.00	0.00	0.00	0.00	0.00	0.00	0.00	0.00	0.00	0.00	0.00	0.00
MDC	STBY(HV OFF)	# 3.00	# 3.00	# 3.00	# 3.00	# 3.00	# 3.00	# 3.00	# 3.00	# 3.00	# 3.00	# 3.00	# 3.00
	HV ON	0.00	0.00	0.00	0.00	0.00	0.00	0.00	0.00	0.00	0.00	0.00	0.00
NMS	SLEEP	# 8.00	# 8.00	# 8.00	# 8.00	# 8.00	# 8.00	# 8.00	# 8.00	# 8.00	# 8.00	# 8.00	# 8.00
	MEASURE	0.00	0.00	0.00	0.00	0.00	0.00	0.00	0.00	0.00	0.00	0.00	0.00
USO	OFF	# 0.00	# 0.00	# 0.00	# 0.00	# 0.00	# 0.00	# 0.00	# 0.00	# 0.00	# 0.00	# 0.00	# 0.00
	ON	0.00	0.00	0.00	0.00	0.00	0.00	0.00	0.00	0.00	0.00	0.00	0.00
SI Total (W)		63.14	63.14	61.84	63.14	63.14	61.84	60.88	61.84	61.84	61.84	63.14	63.14

note) Mark "#" indicates the using mode in each operation

Table1.3.3-3 Power Budget for each Transient Mode (2/4)

S/S Name	S/S Mode	Earth Orbit				Orbit Insertion		Mars Orbit									
		Shadow			Sunlit	Transfer	Mars	Sunlit						Shadow			
		Launch	STBY			Orbit	Orbit	LV	PreHeat	RCS	PreHeat	OMS		RCS		OMS	
PCD	ON	# 8.11	# 8.11	# 8.11		# 8.11	# 8.11	# 8.11	# 8.11	# 8.11	# 8.11	# 8.11		# 8.11		# 8.11	
SBR	SBR-A /B ON	# 17.52	# 17.52	# 17.52		# 17.52	# 17.52	# 17.52	# 17.52	# 17.52	# 17.52	# 17.52		# 17.52		# 17.52	
CMD	ON	# 3.05	# 3.05	# 3.05		# 3.05	# 3.05	# 3.05	# 3.05	# 3.05	# 3.05	# 3.05		# 3.05		# 3.05	
TMS	OFF	0.00	0.00	0.00		0.00	0.00	0.00	0.00	0.00	0.00	0.00		0.00		0.00	
	ON (HIGH PWR)	# 27.82	# 27.82	# 27.82		# 27.82	# 27.82	# 27.82	# 27.82	# 27.82	# 27.82	# 27.82		# 27.82		# 27.82	
TMX	OFF	# 0.23	# 0.23	# 0.23		# 0.23	# 0.23	# 0.23	# 0.23	# 0.23	# 0.23	# 0.23		# 0.23		# 0.23	
	ON	0.00	0.00	0.00		0.00	0.00	0.00	0.00	0.00	0.00	0.00		0.00		0.00	
XPA	RF OFF	# 20.87	# 20.87	# 20.87		# 20.87	# 20.87	# 20.87	# 20.87	# 20.87	# 20.87	# 20.87		# 20.87		# 20.87	
	RF ON	0.00	0.00	0.00		0.00	0.00	0.00	0.00	0.00	0.00	0.00		0.00		0.00	
DHU	CPU OFF	0.00	0.00	0.00		0.00	0.00	0.00	0.00	0.00	0.00	0.00		0.00		0.00	
	CPU A ON	# 6.48	# 6.48	# 6.48		# 6.48	# 6.48	# 6.48	# 6.48	# 6.48	# 6.48	# 6.48		# 6.48		# 6.48	
	CPU A/B ON	0.00	0.00	0.00		0.00	0.00	0.00	0.00	0.00	0.00	0.00		0.00		0.00	
TCI	ON	# 6.51	# 6.51	# 6.51		# 6.51	# 6.51	# 6.51	# 6.51	# 6.51	# 6.51	# 6.51		# 6.51		# 6.51	
DR	OFF	0.00	0.00	0.00		0.00	0.00	0.00	0.00	0.00	0.00	0.00		0.00		0.00	
	STANDBY	0.00	# 3.22	# 3.22		# 3.22	# 3.22	# 3.22	# 3.22	# 3.22	# 3.22	# 3.22		# 3.22		# 3.22	
	REC	# 3.22	0.00	0.00		0.00	0.00	0.00	0.00	0.00	0.00	0.00		0.00		0.00	
	REC/REPRO	0.00	0.00	0.00		0.00	0.00	0.00	0.00	0.00	0.00	0.00		0.00		0.00	
HCE	ON (Heater All Off)	0.00	0.00	0.00		0.00	0.00	0.00	0.00	0.00	0.00	0.00		0.00		0.00	
	ON (Heater All On)	# 3.57	# 3.57	# 3.57		# 3.57	# 3.57	# 3.57	# 3.57	# 3.57	# 3.57	# 3.57		# 3.57		# 3.57	
EPT-SA	ON (Signal Out)	# 9.77	0.00	0.00		0.00	0.00	0.00	0.00	0.00	0.00	0.00		0.00		0.00	
INS-SA	INS 2 ON	# 7.07	0.00	0.00		0.00	0.00	0.00	0.00	0.00	0.00	0.00		0.00		0.00	
SPM		# 0.13	# 0.13	# 0.13		# 0.13	# 0.13	# 0.13	# 0.13	# 0.13	# 0.13	# 0.13		# 0.13		# 0.13	
AOCE	CPU-A ON	# 14.00	# 14.00	# 14.00		# 14.00	# 14.00	# 14.00	# 14.00	# 14.00	# 14.00	# 14.00		# 14.00		# 14.00	
	CPU-A/B ON	0.00	0.00	0.00		0.00	0.00	0.00	0.00	0.00	0.00	0.00		0.00		0.00	
SAS	SAS-A/B ON	# 1.38	# 1.38	# 1.38		# 1.38	# 1.38	# 1.38	# 1.38	# 1.38	# 1.38	# 1.38		# 1.38		# 1.38	

Table1.3.3-3 Power Budget for each Transient Mode (3/4)

S/S Name	S/S Mode	Earth Orbit			Orbit Insertion		Mars Orbit						
		Shadow		Sunlit	Transfer	Mars	Sunlit					Shadow	
		Launch	STBY		Orbit	Orbit	LV	PreHeat	RCS	PreHeat	OMS	RCS	OMS
SSC	ON	# 0.61	# 0.61	# 0.61	# 0.61	# 0.61	# 0.61	# 0.61	# 0.61	# 0.61	# 0.61	# 0.61	# 0.61
ACM	ACM-A/B ON	0.00	# 1.28	# 1.28	# 1.28	# 1.28	# 1.28	# 1.28	# 1.28	# 1.28	# 1.28	# 1.28	# 1.28
	ACM-C ON	0.00	0.00	0.00	0.00	0.00	0.00	0.00	0.00	0.00	0.00	0.00	0.00
	ACM-D ON	# 1.32	0.00	0.00	0.00	0.00	0.00	0.00	0.00	0.00	0.00	0.00	0.00
GRS	GRS-A/B ON	# 2.45	0.00	0.00	0.00	0.00	0.00	0.00	0.00	0.00	0.00	0.00	0.00
RCS/OMS	RCS ON (2 thrusters)	0.00	0.00	0.00	0.00	0.00	0.00	0.00	# 34.86	0.00	0.00	# 34.86	0.00
	OMS ON (NTO, N2H4)	0.00	0.00	0.00	0.00	0.00	0.00	0.00	0.00	0.00	# 93.16	0.00	# 93.16
	LV OP/CL (1 valve)	0.00	0.00	0.00	0.00	0.00	# 52.63	0.00	0.00	0.00	0.00	0.00	0.00
CI Total (W)		134.12	114.78	114.78	114.78	114.78	167.42	114.78	149.64	114.78	207.94	149.64	207.94

note) Mark "#" indicates the using mode in each operation

Unit:W

ITEM	(Remarks)	Earth Orbit			Orbit Insertion		Mars Orbit						
		Shadow		Sunlit	Transfer	Mars	Sunlit					Shadow	
		Launch	STBY		Orbit	Orbit	LV	PreHeat	RCS	PreHeat	OMS	RCS	OMS
Scientific Instrument (SI)		63.14	63.14	61.84	63.14	63.14	61.84	60.88	61.84	61.84	61.84	63.14	63.14
Common Instrument (CI)		134.12	114.78	114.78	114.78	114.78	167.42	114.78	149.64	114.78	207.94	149.64	207.94
SI + CI		197.25	177.92	176.62	177.92	177.92	229.25	175.67	211.48	176.62	269.78	212.78	271.08
Heater		47.52	47.52	185.41	69.03	69.03	185.41	197.11	185.41	197.78	185.41	47.52	47.52
SI+CI+HTR		244.77	225.44	362.03	246.95	246.95	414.66	372.78	396.89	374.40	455.18	260.30	318.59
PCD Loss		15.85	14.39	5.50	2.56	2.56	7.22	5.83	6.61	5.88	8.69	17.06	21.80
WHN Loss		0.23	0.21	0.08	0.04	0.04	0.10	0.08	0.09	0.08	0.12	0.24	0.31
TOTAL		260.85	240.03	367.61	249.55	249.55	421.98	378.69	403.59	380.37	464.00	277.60	340.71

===== Charge Option Table =====

Unit:W

	PCD Inclease	LOSS Inclease	Power for Charge	Total Inclease
TRICKLE (1/50C)	-	3.41	12.79	16.20
TRICKLE (1/50C) + SHNT	-	3.41	12.79	16.20
FULL (1/10C)	-	7.55	73.46	81.00

Table 3.3-3 Power Budget for each Transient Mode (4/4)

		Earth Orbit						Orbit Insertion				Mars Orbit													
		Shadow				Sunlit		Transfer		Mars		Sunlit										Shadow			
		Launch		STBY				Orbit		Orbit		LV		PreHeat		RCS		PreHeat		OMS		RCS		OMS	
		(DTY)	(PWR)	(DTY)	(PWR)	(DTY)	(PWR)	(DTY)	(PWR)	(DTY)	(PWR)	(DTY)	(PWR)	(DTY)	(PWR)	(DTY)	(PWR)	(DTY)	(PWR)	(DTY)	(PWR)	(DTY)	(PWR)	(DTY)	(PWR)
SI HTR	EIS HTR ON	0	0.0	0	0.0	0	0.0	0	0.0	0	0.0	0	0.0	0	0.0	0	0.0	0	0.0	0	0.0	0	0.0	0	0.0
	XUV HTR ON	14	0.4	14	0.4	0	0.0	0	0.0	0	0.0	0	0.0	0	0.0	0	0.0	0	0.0	0	0.0	14	0.4	14	0.4
	SPW HTR ON	0	0.0	0	0.0	0	0.0	0	0.0	0	0.0	0	0.0	0	0.0	0	0.0	0	0.0	0	0.0	0	0.0	0	0.0
	MST HTR ON	0	0.0	0	0.0	0	0.0	0	0.0	0	0.0	0	0.0	0	0.0	0	0.0	0	0.0	0	0.0	0	0.0	0	0.0
	UVS HTR ON	0	0.0	0	0.0	0	0.0	0	0.0	0	0.0	0	0.0	0	0.0	0	0.0	0	0.0	0	0.0	0	0.0	0	0.0
	MIC HTR ON	0	0.9	0	0.9	0	0.0	0	0.0	0	0.0	0	0.0	0	0.0	0	0.0	0	0.0	0	0.0	0	0.9	0	0.9
	NTNK1	48	2.3	48	2.3	100	10.2	0	0.0	0	0.0	100	10.2	100	10.2	100	10.2	100	10.2	100	10.2	48	2.3	48	2.3
	RCSPIP2	0	0.0	0	0.0	100	4.9	61	1.4	61	1.4	100	4.9	100	4.9	100	4.9	100	4.9	100	4.9	0	0.0	0	0.0
	RCSPIP4	0	0.0	0	0.0	100	11.3	0	0.0	0	0.0	100	11.3	100	11.3	100	11.3	100	11.3	100	11.3	0	0.0	0	0.0
CI HTR(A)	VLVMB	61	2.1	61	2.1	100	7.3	200	6.8	200	6.8	100	7.3	100	7.3	100	7.3	100	7.3	100	7.3	61	2.1	61	2.1
	VLVMC	55	1.6	55	1.6	100	6.2	281	8.0	281	8.0	100	6.2	100	6.2	100	6.2	100	6.2	100	6.2	55	1.6	55	1.6
	EMA1	52	4.0	52	4.0	100	16.8	24	1.9	24	1.9	100	16.8	100	16.8	100	16.8	100	16.8	100	16.8	52	4.0	52	4.0
	BAT-A_SUNLIT	100	5.4	100	5.4	100	11.7	208	11.2	208	11.2	100	11.7	100	11.7	100	11.7	100	11.7	100	11.7	100	5.4	100	5.4
	BAT-A_SHADOW	0	0.0	0	0.0	0	0.0	0	0.0	0	0.0	0	0.0	100	11.7	0	0.0	0	0.0	0	0.0	0	0.0	0	0.0
	SSCBLK	0	0.0	0	0.0	0	0.0	0	0.0	0	0.0	0	0.0	0	0.0	0	0.0	100	12.4	0	0.0	0	0.0	0	0.0
	HTNK1	109	11.7	109	11.7	100	23.3	13	1.4	13	1.4	100	23.3	100	23.3	100	23.3	100	23.3	100	23.3	109	11.7	109	11.7
	GTNK1	0	0.0	0	0.0	100	6.0	0	0.0	0	0.0	100	6.0	100	6.0	100	6.0	100	6.0	100	6.0	0	0.0	0	0.0
	RCSPIP1	0	0.0	0	0.0	100	13.3	154	9.4	154	9.4	100	13.3	100	13.3	100	13.3	100	13.3	100	13.3	0	0.0	0	0.0
	RCSPIP3	0	0.0	0	0.0	100	14.6	0	0.0	0	0.0	100	14.6	100	14.6	100	14.6	100	14.6	100	14.6	0	0.0	0	0.0
	RCSPIP5	0	0.0	0	0.0	100	11.4	56	3.0	56	3.0	100	11.4	100	11.4	100	11.4	100	11.4	100	11.4	0	0.0	0	0.0
	VLVMA	56	1.9	56	1.9	100	7.4	179	6.1	179	6.1	100	7.4	100	7.4	100	7.4	100	7.4	100	7.4	56	1.9	56	1.9
	OMEVLV1	66	3.6	66	3.6	100	11.9	26	1.4	26	1.4	100	11.9	100	11.9	100	11.9	100	11.9	100	11.9	66	3.6	66	3.6
	EMB1	60	4.8	60	4.8	100	17.4	79	6.3	79	6.3	100	17.4	100	17.4	100	17.4	100	17.4	100	17.4	60	4.8	60	4.8
	BAT-B_SUNLIT	100	5.4	100	5.4	100	11.7	75	4.0	75	4.0	100	11.7	100	11.7	100	11.7	100	11.7	100	11.7	100	5.4	100	5.4
	BAT-B_SHADOW	64	3.5	64	3.5	0	0.0	153	8.2	153	8.2	0	0.0	0	0.0	0	0.0	0	0.0	0	0.0	64	3.5	64	3.5
	THR_BED	0	0.0	0	0.0	0	0.0	0	0.0	0	0.0	0	0.0	0	0.0	0	0.0	0	0.0	0	0.0	0	0.0	0	0.0
	OME_INJECTION	0	0.0	0	0.0	0	0.0	0	0.0	0	0.0	0	0.0	0	0.0	0	0.0	0	0.0	0	0.0	0	0.0	0	0.0

HTR Total (W)	SI+(A)+RCS	47.52	47.52	185.41	69.03	69.03	185.41	197.11	185.41	197.78	185.41	47.52	47.52
	SI+(B)+RCS	47.52	47.52	185.41	69.03	69.03	185.41	197.11	185.41	197.78	185.41	47.52	47.52

1.4 Mission Scenario

I. Nakatani (ISAS)

Mission scenario with a particular emphasis on spacecraft operations in each of the orbit phases is briefly described in this section. The overall mission sequence is summarized in Fig.1-4.1. Details on each of the orbital events is presented in section 11.

Fig.1-4.2 shows the overall scenario of the Planet-B mission. The launch window will open on July 4, 1998 JST. We have two windows : one in early July and the other in early August, each of which is about one week long. In late August through early September we have a back-up window. (For detailed window information, see section 11.)

(1) Launch Phase

The Planet-B spacecraft will be launched by M-V-3 at JKSC (Kagoshima Space Center). Most of the onboard common instruments will be in operation and the S-band down link will be maintained using the 20m$^{\phi}$ tracking antenna at JKSC during the lift off. The nominal separation time of the spacecraft from the kick motor (4th stage of the launch vehicle) is X + 1370 (1370sec after launch) which will be adjusted by the radio command based on the data from the precision tracking radar. The solar paddles will be deployed prior to the 1st visible period which will start about 11hours after launch. During the 9hour 1st visible period, about 42m/sec ΔV will be carried out. The ΔV maneuver will be sandwiched by about 90 deg. attitude maneuvers. A series of orbit corrections will be repeatedly conducted at the apogee and perigee to adjust the apogee and perigee height.

(2) Parking Orbit Phase

The spacecraft will stay in the parking orbit for about 5 and a half months. During this period we will conduct two lunar-swing-by's on September 24 and December 18, 1998. Throughout the 5.5 month parking orbit phase, the baseline for attitude control will be keeping the solar paddles directed towards the sun to generate power and also to keep the spacecraft thermal condition within the acceptable range. This means the HGA (High Gain Antenna) cannot be pointed to the earth, so LGAs (Low Gain Antennas) will be used for communication on S-band. In the parking orbit phase, only three science instruments will be in operation : XUV, MIC and MDC. The requirement on power system in this phase is benign, because firstly, the spacecraft will experience, as can be seen in Fig.1-4.2, up to only 20 minute eclipse in this phase and the distance from the sun, moreover, will be relatively small, and finally, most of the science instruments will not be in operation.

(3) Trans-Mars Orbit Phase

On December 20, 1998, the spacecraft will conduct a series of operations to leave the earth gravity field using the 500N bi-propellant thruster together with the earth gravity assist. Planet-B will stay in the trans-Mars orbit for about 11 months. During the first 75 days after leaving the parking orbit, we will still be able to use the LGA on S-band and so the requirement on the solar paddle pointing towards the sun will have a priority. After 75 days from the departure from the earth until the encounter with Mars, we will use HGA for the communication on S-band between the spacecraft and the earth. Hence, the direction of the HGA, which has 2.7 degree half-beam width for S-band transmission, will have a higher priority over that of the solar paddles. Fortunately, the angle between the sun and the earth seen from the Planet-B spacecraft will be less than 45 deg. after 75 days from the earth departure throughout the mission life with enough power generated by the solar paddles. In the trans-Mars orbit phase, only two science instruments, XUV and MDC, will be in operation. We will have no shadow period in this phase.

Attitude corrections will be carried out using hydrazine thrusters once in several days to keep the HGA direction towards the earth.

From immediately after the launch through the MOI, Deep Space Network / NASA will support the orbit determination of the Planet-B Spacecraft.

(4) Mars Orbiting Phase

On October 11, 1999, a series of operations to inject the Planet-B spacecraft into the Mars rotating orbit will be conducted. This series of operations is called MOI (Mars Orbit Injection) which will include following sequence :

1) To align the direction of the 500N OMS (Orbital Maneuvering System) with the tangential direction of the orbit, a 88.5 deg. attitude maneuver is carried out. As a result, the communication link with the earth is lost.
2) The OMS is fired for 15 minutes.
3) Another 88.5 deg. attitude maneuver is conducted to align the HGA towards the earth thus re-establishing the communication link.
4) If necessary, attitude trim operation is conducted using the sun sensor and star scanner data.

All of these operations will be automatically carried out without the interactions with the earth.

After the MOI, orbit correction will be conducted followed by the extension of 4 of the 25m wire antennas, the 5m mast and the 1.1m TPI boom.

The expected life of the Planet-B in Mars orbit is 2 earth years. During this phase, attitude corrections will be carried out using hydrazine thrusters once in a day or so to keep the HGA direction to the earth. The half beam width of the HGA is 0.7deg. for X-band communication.

Using 64mϕ antenna at UDSC, 4kbps down link will be available on X-band in the worst condition. When the Mars in near to the earth, 32kbps down link will be established. For downlink 34mϕ antenna at JKSC will be used. Immediately before and after the spacecraft occultations by Mars, radio science measurement will be conducted which will also be supported by DSN / NASA during the periods when spacecraft visibility is not available at UDSC and JKSC.

During the 2 year mission life in Mars orbit, the Planet-B will have two chances to encounter with each of the Mars moons, Deimos and Phobos. On these occasions, special orbit and attitude operations will be conducted to take pictures of these bodies.

Fig. 1-4.1 Planet-B Mission Sequence

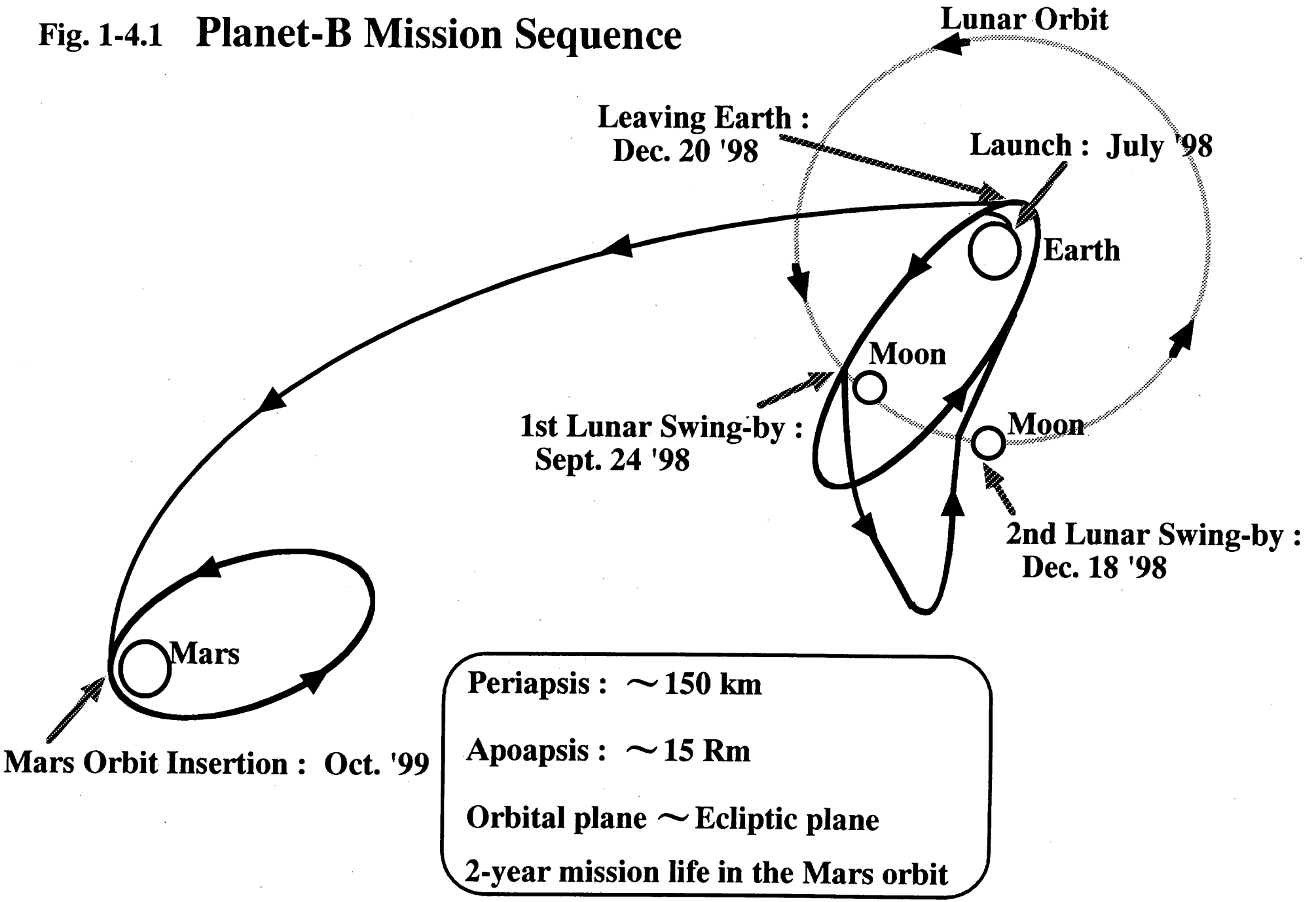

Fig. 1-4.2 Planet-B Mission Scenario

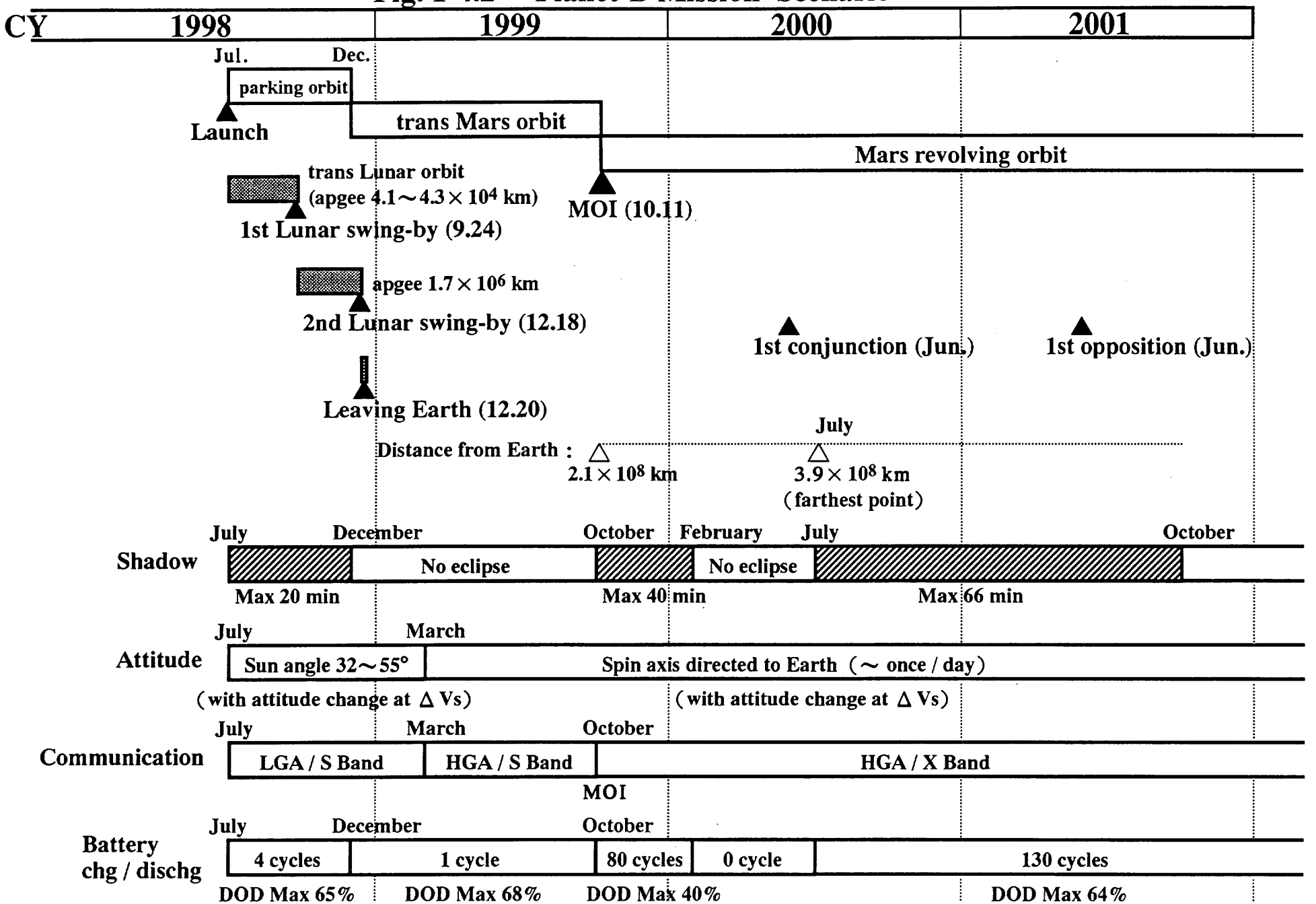

2. Scientific Instruments

2.1 Particle Spectrum Analyzer (PSA)

Team Members :	Affiliation	ESA	ISA	XUV	EIS
Shinobu Machida	Kyoto U.	PI	Co-I		
Hajime Hayakawa	ISAS	Co-I	PI		
Koujun Yamashita	Nagoya U.			PI	
Jun Kikuchi	Waseda U.				PI
Tomoki Yanagimachi	Rikkyo U.				Co-I
Masafumi Hirahara	Rikkyo U.	Co-I	Co-I	Co-I	
Toshio Terasawa	U. of Tokyo	Co-I	Co-I		Co-I
Masato Nakamura	U. of Tokyo			Co-I	
Sho Sasaki	U. of Tokyo			Co-I	
Yutaka Abe	U. of Tokyo			Co-I	
Toshihiro Ogawa	NASDA			Co-I	
Tadayoshi Doke	Waseda U.				Co-I
Nobuyuki Hasebe	Ehime U.				Co-I
Eiichi Sagawa	CRL	Co-I	Co-I	Co-I	
Wataru Miyake	CRL			Co-I	
Tatsuo Harada	Tokyo Metrop. U.			Co-I	
Katsuaki Nagata	Tamagawa U.				Co-I
Atsuhiro Nishida	ISAS	Co-I	Co-I		
Koichiro Tsuruda	ISAS	Co-I	Co-I		
Toshifumi Mukai	ISAS	Co-I	Co-I		
Masahiro Hoshino	ISAS	Co-I	Co-I		
Yoshifumi Saito	ISAS	Co-I	Co-I	Co-I	
Ichiro Yoshikawa	ISAS			Co-I	
Kiyoshi Maezawa	Nagoya U.	Co-I	Co-I		Co-I
Masaki Fujimoto	Tokyo Inst. Tech.	Co-I	Co-I		Co-I
Supriya Chakrabarti	Boston U.			Co-I	
Berend Wilken	MPIA				Co-I
Yasuo Ito	Toshiba Co. Ltd.	Co-I	Co-I		
Manufacturers :					
Meisei Electric Co., Ltd.					
Mitaka-Koki Co., Ltd.					
Hamamatsu Photonics K.K.					

2.1.1 Observation Objectives

2.1.1.1 Electron Spectrum Analyzer (ESA)

The ESA measures three dimensional velocity distribution functions in a high bit-rate mode and pitch angle sorted two dimensional distribution functions in a low bit-rate mode. It is expected to achieve our understandings on the following subjects about the Martian plasma environments.

1) Martian Bow Shock and Planetopause

The structure of the bow shock such as its scale size, dissipation mechanisms, electron accelerations, and the excitation of waves due to an anisotropic electron velocity distribution will be investigated. Studies on mass, momentum, and energy transport across the shock are regarded to be significant.

The structure of the planetopause is highly dependent on whether Mars has an intrinsic magnetic field or not. According to the recent observations by the Mars Global Surveyor, the surface magnetic field of the planet is less than 40 nT, but there are some localized magnetic anomalies about 400 nT below the ionospheric altitude. There are possibilities that such anomalies generate intensification of electron fluxes, and are studied by the electron measurement. Also, the ionization of neutral particles due to the electron impact, and subsequent plasma supply into the Martian magnetosphere, and the transport of mass, momentum and energy from the solar wind across the planetopause should be investigated.

2) Martian Ionosphere

A major source of the thermal electrons is the photo-ionization in the dayside ionosphere of Mars. The measurement of energy spectrum by ESA will provide significant information to understand chemical processes in this region. The Spatial profile of the electron density and temperature at the high altitude dayside and nightside Martian ionosphere should be studied as well, finally to achieve our comprehension of the Martian ionosphere as a plasma source of the Martian magnetosphere.

3) Martian Airglow (Aurora)

A direct detection of the primary electrons which have a possibility to produce an airglow (aurora) due to electron precipitation will be attempted. Synthesized study on the generation mechanism of such electrons and the Martian electric current system is regarded to have a great importance.

4) Magnetopause, Mass Loading Boundary and Martian Tail

We plan to study the structure and characteristics of the magnetopause and the mass

loading boundary, for example, by investigating whether it has a structure of a rotational discontinuity or a tangential discontinuity, and to study the process of electron acceleration and heating in those regions.

We will further study to understand the structure of the Martian tail. In particular, particle acceleration and heating processes in this region, and the origin of plasmas, i.e., whether they are supplied from the solar wind or they are supplied from the planetary ionosphere. We regard that the warm electrons sometimes appear in the solar wind and cold dense electrons of the ionospheric origin are good tracers of the magnetic field lines.

5) Solar Wind

Structure and properties of the solar wind electrons at quite times as well as disturbed times will be studied. It is also possible to study on the interplanetary shocks, flux ropes, tangential discontinuities, rotational discontinuities, and current sheets in the solar wind at the distance of the planet Mars.

2.1.1.2 Ion Spectrum Analyzer(ISA)

The ion spectrum analyzer(ISA) aims to measure 3-D moment data 3-D velocity distribution function of low energy ions in the Martian environment as well as in the solar wind. The major scientific objects for ISA are:

1)Solar Wind

Since gravity of the Mars is small, neutral oxygen atoms can escape from ionosphere into the solar wind. Part of these oxygen atoms are photo-ionized by the solar UV flux. The ionized particles are accelerated up to twice of the solar wind velocity by the solar wind electric field. These accelerated ions are called as pick up ion and have either beam or ring distribution in the velocity space with the solar wind velocity as the center of the ring. Though the highest energy of these accelerated ions exceeds proposed measurement range of the ISA(6eV-16keV) in the upstream region of the Martian bow shock, main body of the distribution can be observed by the ISA. In the down stream of the region of the bow shock, whole part of the velocity distribution of the pick up ion is expected in the measurement energy range of the ISA. ISA also can measure the 3 dimensional velocity distribution of the decelerated solar wind due to the mass loading effect of the pick up ions simultaneously. These measurements give the information of the escaping mechanism and interaction between the solar wind and the Martian atmosphere.

2)Ionopause

Based on the Venus observations solar wind magnetic field occasionally penetrate deeply into the ionosphere. Same kind of phenomena is expected to occur on the Martian ionosphere.

Combination of the ISA, ESA, and MGF experiments give us the information of the interaction processes between ionosphere and the solar wind.

3)Martian Tail

One of the remarkable observations of the Phobos-2 mission was the discovery of the keV energy range oxygen ion beam flowing downward in the Martian magnetotail. Generation mechanism of the oxygen ion flows is not yet understood. The ISA can measure the oxygen ion flows in the wide range of the Martian magnetotail both in the radial and azimuthal directions. The origin and the acceleration mechanism of these oxygen ions can be studied with ISA measurement in the Martian tail.

2.1.1.3 Electron and Ion Spectrometer (EIS)

The EIS detectors measure ions in the energy range of 30 keV - 1 MeV and electrons in the energy range 30 - 400keV. Generally speaking, particles in this energy range constitute a high energy tail of the main plasma distribution, since solar wind protons with 1 keV energy are one of the major plasma sources of the planetary magnetospheres. Observations in the Earth's magnetosphere have established that these higher energy particles carry important and unique information on the dynamical processes occurring in the planetary environment. For example, detailed features of the substorm processes have been clarified through the analysis of the energetic particle layer of the distant plasma sheet and of energetic injection events in the near-earth magnetosphere. On the other hand, observation of energetic particles has been prerequisite to the identification of acceleration processes occurring at the earth' bow shock and magnetospheric boundaries. Overall, detailed information on energetic particles is indispensable for correct understanding of the solar-wind magnetosphere interaction.

As compared to the earth's magnetosphere, Martian magnetosphere is expected to be different in two important aspects. Firstly, because of its low gravity, Mars is expected to have an extended corona of oxygen atoms. Certain percentage of these atoms are photo-ionized and picked up by the solar wind, thereby obtaining energy exceeding 30 keV, detailed values of which depends on the solar wind and IMF conditions. Therefore energetic ions of planetary origin may contribute significantly to the energy transport in the Mars environment. Secondly, because of the small size of the magnetosphere and weak magnetic field, gyro radius of the energetic particles may become comparable to the spatial scale of the magnetosphere. This means that these ions may seem unmagnetized for interaction processes occurring locally at the interface between the solar wind and the magnetosphere and/or ionosphere.

Our main objective of the EIS experiment is to clarify these rather unexplored aspects of the solar-wind interaction occurring in the Martian environment and compare them with our knowledge accumulated on the earth's environment. Specifically, we list below the main targets of the EIS measurements for the Planet-B mission.

(1) Ion pick-up processes

Mars is expected to possess an extended oxygen corona (Nagy and Cravens, 1988; Ip, 1988). Because of the low gravity, oxygen atoms produced through dissociative recombination of O_2^+ in Martian ionosphere may extend deeper into the exosphere as compared to the case of Venus. The oxygen density decreases with the distance from the planet but is expected to remain as high as 30 /cm^3 even at the distance of a few Martian radii from the surface (Ip, 1988). Part of these oxygen atoms are photo-ionized and accelerated by the motional electric field of the solar wind up to energies beyond 30 keV. Simulation results (Luhmann and Schwingenschuh, 1990) indicate that the absolute flux of theses ions in the tailward solar wind may exceed 10^4 /cm^2/s, depending on the magnitude and direction of the IMF. A highly anisotropic nature of these ions (mono-energetic beams basically confined in the plane perpendicular to the IMF) would make the identification of the pick-up processes relatively easy, but the chance of the observation strongly depends on the satellite position. The energy coverage and the wide field-of-view of EIS detectors (owing to the satellite spin) are well suited for the detection of heavy picked-up ions and will add significantly to the observation results of Phobos-2 mission, for which the field-of-view of energetic particle detectors was limited (Kirsch et al., 1991).

(2) Acceleration at the bow shock

It has been suggested that energetic particles appear preferentially near the Martian bow shock(Afonin et al., 1991). Such acceleration processes have also been detected at the earth's bow shock and other planetary bow shocks. For the earth's case, two different mechanisms have been proposed for ion acceleration at the bow shock, namely, drift and diffuse acceleration mechanisms. An interesting point for the case of Martian bow shock is the way Oxygen ions influence the shock dynamics. It is expected that the upstream solar wind is already contaminated by the picked-up Oxygen ions. The presence of these ions may lead to electromagnetic fluctuations both upstream and downstream of the shock and hence influence the degree of ion scattering. Large gyroradius of these heavy ions may also influence the structure of the shock itself. It is necessary to evaluate the importance of the shock acceleration to the overall budget of acceleration and transport processes around Martian magnetosphere for different IMF conditions and compare it to the case of earth. Of course, careful analysis is needed to distinguish the bow-shock accelerated ions from picked up ion population of planetary origin.

(3) Acceleration processes in the magnetospheric tail

Phobos-2 observation has established that Mars has an induced magnetic tail consisting of

draped IMF field lines (Riedler et al., 1989). It also established that there is a significant escape of heavy ions from the planet, confined inside the tail. Since Martian atmosphere is rather thin, the ion escape could have influenced the historical evolution of Martian atmosphere. The energy of these ions is reported to be comparable to that of the solar wind protons, and hence is significantly larger than the thermal ion energies in the ionosphere; thus there is a need for a powerful acceleration mechanism(s) operating in the magnetic tail of Mars.

Limited information derived from Phobos observations indicates that ions of different mass gain the same amount of energy through the acceleration processes. This fact supports the view that the acceleration is somehow related to an electric field potential produced along the field line. However, if the acceleration mechanisms are related to the induced bulk motion of plasma, as in the case of a release of magnetic tension, heavy ions can be accelerated up to the local Alfven velocity and gain energies of the order of a few tens of keV. The presence of this kind of acceleration mechanism cannot be denied from previous observations, and constitutes an important target of the EIS observation in the magnetotail.

(4) Identification of reconnection processes

Although Mars does not have a strong magnetic field, there remains a possibility that Mars has a weak intrinsic magnetic moment which would stop the solar wind before it reaches the dayside ionosphere. The presence of a weak or partial magnetosphere produced in this way will lead to a number of possibilities that energetic phenomena similar to those occurring in the earth's magnetosphere can also be observed around Mars. Firstly, magnetic reconnection can take place between the IMF and magnetospheric field lines at the dayside magnetopause and accelerate ions and electrons locally. Secondly, the transport of reconnected field lines toward the tail will lead to an enhancement of tail magnetic tension, and then trigger tail reconnection just like it does in the earth's magnetotail. (Even if Mars does not have an intrinsic magnetic field, tail reconnection may be triggered by similar enhancement of magnetic tension in the induced magnetic tail.) These reconnection processes will accelerate ions and electrons via the induced electric field produced by rapid changes in the magnetic field configuration. Although the Martian magnetotail has a smaller spatial scale as compared to the earth's magnetosphere, the induced electric field would be capable of accelerating particles up to the energies of the EIS detectors. Analysis of energy spectra and anisotropies of accelerated particles by EIS will contribute to clarifying the detailed mechanisms of such reconnection processes.

(5) Transport and energization of solar particles

Transport and modulation of solar energetic particles around the Mars orbit is another point of interest. Monitoring of solar energetic events from Mars and earth orbits by Planet-B and other spacecraft will provide new insights into the transport of energetic particles in the

interplanetary medium. Compression of the solar wind and IMF near the Martian magnetopause/ionopause around the subsolar point will lead to energization of particles due to the conservation of the first adiabatic invariant. A shadow effect can be expected on the rear side of the planet (Afonin et al., 1989). Some of the solar particles and Jovian electrons may be trapped or quasi-trapped if Mars possess an intrinsic magnetic field. Contribution of these ions and electrons of exterior origin to energetic population around Mars is an important subject that should be addressed by the Planet-B mission.

References

Afonin, V., S. McKenna-Lawlor, K. Gringauz. Kecskemety, E. Keppler, E. Kirsch, A. Richter, D. O'Sullivan, A, Somogyi, A. Thompson, A. Varga and M. Witte, Energetic ions in the close environment of Mars and particle shadowing by the planet, Nature, 341, 616-618, 1989

Afonin, V. V., S. M. P. McKenna-Lawlor, G. Erdos, K.I. Gringauz, E. Keppler, K. Kecskemety, E. Kirsch, R. G. Marsden, A. K. Richter, W. Riedler, K. Schwingenschuh, A. Somogyi, D. O'Sullivan, L. Szabo, A. Thompson, A. Varga, K. -P Wenzel, M. Witte, Ye Yeroshenko, L. Zeleny, Low energy charged particles in near Martian space from the SLED and LET experiments aboard the Phobos-2 spacecraft, Planet. Space Sci., 39, 153-166, 1991

Ip, W. -H., On a hot oxygen corona of Mars, Icarus, 76, 135-145, 1988

Kirsch, E., E. Keppler, M. Witte, H. Rosenbauer, S. Livi, K. Schwingenschuh, S. McKenna-Lawlor, V. V. Afonin, D. O'Sullivan, and A. Thompson, Pickup ions (E>55 keV) measured near Mars by Phobos-2 in February/March 1989, Ann. Geophysicae, 9, 761-767, 1991

Luhmann, J. G., and K. Schwingenschuh, A model of the energetic ion environment of Mars, J. Geophys. Res., 95, 939-945, 1990

Nagy, A. F. and T. E. Cravens, Hot oxygen atoms in the upper atmospheres of Venus and Mars, Geophys. Res. Lett, 15, 433-436, 1988

Riedler. W., D. Mohlmann, V. N. Oraevsky, K. Schwingenschuh, Ye. Yeroshenko, J. Rustenbach, Oe. Aydogar, G. Berghofer, H. Lichtenegger, M. Delva, G. Schelch, K. Pirsch, G. Fremuth, M. Steller, H. Arnold, T. Raditsch, U. Auster, K.-H. Fornacon, H.J. Schenk, H. Michaelis, U. Motschmann, T. Roatsch, K. Sauer, R. Schroter, J. Kurths, D. Lenners, J. Linthe, V. Kobzev, V. Styashkin, J. Achache, J. Slavin, J.G. Luhmann, and C. T. Russell, Magnetic fields near Mars: first results, Nature, 341, 604-607, 1989

2.1.1.4 X-ray Ultra-Violet scanner (XUV)

The X-ray Ultra-Violet (XUV) scanner on board Planet-B will measure the abundance and distribution of Helium gas and ions in the Martian ionosphere. Neutral Helium gas scatter the 58.4nm (He I emission) and those ions scatter 30.4nm (He II emission) XUV light from the sun which are the target of the scanner. As this measurement is carried out from the outside of the Martian ionosphere, we will be able to decide the total abundance and the height distribution of these Helium components.

No observations of neutral Helium gas has been made on previous Mars missions, and Helium ion measurement was done only by Phobos 2. On Planet-B these components are measured in situ by the plasma instruments and neutral gas mass spectrometer. Simultaneous observation by the XUV scanner with these instruments is meaningful since both local and global information will be available. Science objectives are listed below.

a) Neutral Helium gas on Mars

Helium gas measurement is important to know the internal activity of the Mars which has been discussed for many years. In 1993, the EUV telescope on the Extreme Ultraviolet Explorer satellite (EUVE) was pointed to the Mars for 3 days, and measured the 58.4nm scattered light from the neutral Helium gas (Krasnopolsky et al., 1994). Even though the signal from the Helium gas was faint, the result seems to support the existence of the Helium gas. Krasnopolsky et al. (1994) tried to relate observed 4-He abundance with degassing from Mars. They assumed continuous steady-state degassing. On the Earth where continuous degassing at mid oceanic ridges can supply Helium (most of 3-He and 20-30% of 4-He of total abundance on the Earth) into the atmosphere. A large amount of radiogenic 4-He can be also degassed from continental crust by magmatic and hydrothermal processes. However, on Mars, continuous degassing cannot be readily assumed. Geomorphology and meteorite studies suggest that there are young Martian volcanic activities, but there is no evidence of continuous degassing source such as mid oceanic ridges. Neither are presently active plume-type volcanoes or fumaroles on Mars. To explain the atmospheric Helium by volcanism, the time scale of intermittency of volcanism should be shorter than Helium residence time in the atmosphere. Impact cratering would disturb crustal materials and supply radiogenic Helium into the atmosphere. Since size distribution of impactors should extend to the small (i.e., meteorite) size, outgassing due to impacts may be continuous. Using crater density model and assuming that Helium could degas from a volume ten times as large as crater volume, we have 10-30kg/yr for degassing rate. The time scale for supplying 10^{10}kg Helium is 10^{9}yr (Sasaki and Tajika, 1995). Thus impact cratering cannot be a good degassing source. If significant amount of 4-He is detected in Martian atmosphere by the XUV scanner, there should be ongoing underground magmatic activities or hydrothermal circulation, transporting radiogenic Helium onto the atmosphere.

b) Helium ions around the Mars

The ionization process of the Helium gas and its escape from the ionosphere to the interplanetary space is one of our interests. As the Mars has no magnetic field (or very small magnetic field) Helium escape process as ions should be much different from that of the Earth. The comparison of these two cases will give information of the behavior of the space plasma. As described in the former section the planetary origin Helium neutrals produced in the Martian interiors may degas into the atmosphere through the planetary inner activities and diffuse into the atmosphere. Some of them are ionized through various processes, such as photoionization and electron impact ionization, and form a part of the Martian ionosphere. In the top region of the ionosphere, such ionized particles are swept away by the interplanetary magnetic field through the interaction between the solar wind and the Martian ionosphere. These pick-up ions gyrate around the magnetic field which is flown by the solar wind at between zero to twice the solar wind speed and spread toward the tail region. This configuration is illustrated briefly in Luhmann and Brace [1991] and Luhmann and Kozyra [1991].

The *in situ* Helium ion measurement in the Martian ionosphere was done only by Phobos 2 mission (Barabash et al., 1994; Barabash et al., 1995). They observed Helium ion particles at 9,600km altitude from Martian center and measured two typical Helium ions, i.e., 10-20keV high energy ions which are equivalent to twice the solar wind speed, and 300-800eV lower energy ions. They concluded that the higher energy ions indicate ion escape from Mars through the pick-up process and the lower energy ions may have escaped by the electric field. When the XUV scanner effectively measures the configuration of the Martian ionosphere and the surroundings, it is convenient that the spacecraft is located a little far away from Mars. First of all, we can image the Martian ionosphere and magnetosphere structure from Helium ion scattered light as a whole. By means of the comparison between the Helium ion and the Helium neutral images, we can identify the formation of the Martian ionosphere and the ionization rate dependent on the altitude at various solar zenith angle and seasonal variations. Our measurement will reveal not only the configuration of the Martian ionosphere and the interactive region with the solar wind, but also the local escape process. Though the XUV and the ion spectrum analyzer (ISA) measurements of a particular place will not take place simultaneously, such mutual measurements will reveal the local escape process.

Another interest lies in the observation of the pick-up ions. As the Martian ionosphere is directly interact with the solar wind due to the absence of the magnetic field, the Helium ions of Martian atmospheric origin are picked up by the magnetic field flowing with the solar wind. On the other hand a particles (He^{++}) in the solar wind become He^{+} after the charge exchange with the neutrals in the Martian ionosphere and could be detected by the XUV instrument. Such measurement is important in the study of the mass, momentum, and energy transfer from the solar wind to the Martian ionosphere.

c) Terrestrial Plasmasphere

Planet-B will be put into a parking orbit around the Earth for 5 months before the insertion into the transfer orbit to the Mars. The XUV will be turned on the parking orbit and measure the Helium ion distribution of the terrestrial plasmasphere. Such observation from several tens of Earth radii has not been done so far. The global image of the plasmasphere will give information of the plasmasphere formation.

The XUV instrument will detect the faint He II emission especially from the vicinity of the plasmapause. Our traditional image in which the plasmasphere is the region surrounding the boundary between closed and open convection trajectories will be tested by our measurement. In the formation of the plasmasphere unsolved problems are still remained. During the refilling phase plasma is supplied from the conjugate ionospheres through field aligned flows with supersonic velocity. The question lies in the point how the diffusive equilibrium state is realized under such a supersonic field aligned flows. Banks et al. [1971] proposed an idea that fast ion streams are thermalized by shocks during the early stage of the refilling process, where the shock formation occurs as a result of the electrostatic coupling between ion beams interpenetrating at the equator from the conjugate ionospheres. But this coupling occurs under very restrictive plasma conditions and the verifications of such conditions have not been done yet. This is one of the target where the visualization of the plasmasphere by the XUV scanner can approach.

d) Interplanetary He I and He II emissions

On the way from Earth to the Mars, the XUV will measure the emission from the interplanetary Helium gas and ions. The alpha particles (He^{++}) will make charge exchange with interstellar Hydrogen atoms and become He^{+} and He. Helium ions (He^{+}) are flowing with the solar wind and due to the Doppler shift effect, we do not expect they scatter solar EUV light effectively. However, the Helium atoms (He) may lose its momentum through the charge exchange process and may scatter 58.4nm EUV light effectively and in that case we will observe this emission. This measurement will give information of efficiency of the charge exchange process between Helium ions in the solar wind and interstellar Hydrogen atoms in the interplanetary space.

2.1.2 Instrument Specifications

2.1.2.1 ESA

Energy Range	12 eV ~15 keV
Energy Steps	32 steps
Energy Resolution	ΔE/E ~ 7.0 % (FWHM)
Field of View	4.1 deg x 180 deg
Angle Resolution	2.0 deg x 6.5 deg (FWHM) (maximum)
Time Resolution	2 dim. pitch angle sorted data / spin (maximum) 3 dim. velocity distribution function / spin (maximum)
G-factor	8.16 x10^{-5} cm^2 sr eV/eV at 22.5 deg x 4.1 deg

2.1.2.2 ISA

Energy Range	6 eV/q ~ 16 keV/q
Energy Steps	32 steps
Energy Resolution	ΔE/E ~ 7.2 % (FWHM)
Field of View	4.4 deg x 180 deg
Angle Resolution	1.9 deg x 5.9 deg (FWHM) (maximum)
Time Resolution	3 dim. moment data / spin (maximum) 3 dim. velocity distribution function / spin (maximum)
G-factor	8.84x10^{-5} cm^2 sr eV/eV at 22.5 deg x 4.4 deg

2.1.2.3 EIS

Particles	Energy
Electron	30 – 350 keV
H	30 – 1000 keV
He	30 – 400 keV/n
C, N, O	30 – 400 keV/n
Ne, Mg, Si	30 – 400 keV/n
Z > 16	30 – 400 keV/n

Field of View	TOF - E	± 8°	
	ΔE x E	Si - A	0° ~ +20°
		Si - B	-20° ~ 0°
S Ω	TOF - E	0.013 cm^2 sr	
	ΔE x E	Si – A	0.023 cm^2 sr
		Si - B	0.023 cm^2 sr

TOF-E System

Function	Heavy Ion Identification	
	Time of Flight / Energy Measurement	
Flight Path	40 mm	
Thin Foil	~10 mg/cm2	
	Carbon Foil	
Entry Window	14.5 mm Φ (eff.)	
Grid (Mesh)	Nickel	
	Transparency	78 %
MCP	Gain	~ 5 x 10^7
Time Resolution	~ 1.0 ns	
Collimator	Buffed Structure, Aluminum	
Si – Detector (E – Detector)	Size	14 mm Φ
	Thickness	460 μm
	Type	Ion-Implanted

2.1.2.4 XUV

Mirror aperture	60mm
Focal length	70mm
MCP aperture	10mm
View angle	1.6° , 3.2°
Total efficiency of photon detection	0.6% at 30.4nm, 0.4% at 58.4nm

2.1.3 Instrument Configuration

PSA instrument consists of 5 packages, i.e. PSA-E, ESA-S, ISA-S, EIS-S, and XUV-S. The control electronics for each sensors are gathered into one package (PSA-E).

2.1.3.1 ESA-S

The sensor employs a method of a top hat electrostatic analyzer placing a pair of flat disks which works as a collimator at the entrance and toroidal electrodes inside as illustrated in Fig 2.1.3.1-1. The acceptance angle of the particles is geometrically specified and limited by the collimator. The collimator and the outer spherical shell of the electrode are grounded, while the inner toroidal electrode is supplied with high voltage which is swept between 1.0 V and 2700 V with high speed where the sampling time for one energy step is ~4 msec.

The electrons coming through the collimator are attracted down toward the inner electrode by the action of the applied potential. However, only the electrons with specific energy range can further travel down to the exit of the electrodes. There also placed a slit and a mesh supplied with slightly negative voltage (- 12 V) to reflect the secondary electrons which give spurious counts. The electrons passing through the electrode enter to Micro-Channel Plate (MCP) and intensified to detectable charge pulses. Finally, the charge pulses are received by position sensitive anode. The positions where the charge pulses are detected correspond to the incident directions of the electrons. The supplied voltage to the electrodes is related to the energy of the incident electrons, and the measured energy range is from 12 eV to 15 keV with the energy resolution $\Delta E/E$ = 7.0% (FWHM). The intrinsic angular resolution of the sensor is 6.5 deg (FWHM) in polar direction, and 2.0 deg (FWHM) in azimuthal direction. The typical characteristics of ESA-S is shown in Fig 2.1.3.1-2.

2.1.3.2 ISA-S

The ISA sensor uses same type of top hat electrostatic analyzer as ESA-S. The sensor configurations are basically the same as that of ESA-S. In order to measure ions, the polarity of the sweep HV and the polarity of the HV applied to the MCP are reversed from that of ESA-S. Schematic drawing of the sensor including the preamplifier is shown in Figure 2.1.3.2-1 and the typical characteristics of ISA-S is shown in Fig, 2.1.3.2-2.

2.1.3.3 EIS-S

The EIS in the PSA instrumental package is designed to measure the composition of electron and heavy ions in the Mars and interplanetary environment from energies from 30 keV/n to >400 keV/n. This system contains two types of energetic particle telescopes, shown schematically in Fig. 2.1.3.3-1. One is a TOF-E telescope which employs time-of-flight/energy analysis to determine the ion mass. Another is the DExE telescopes based on the

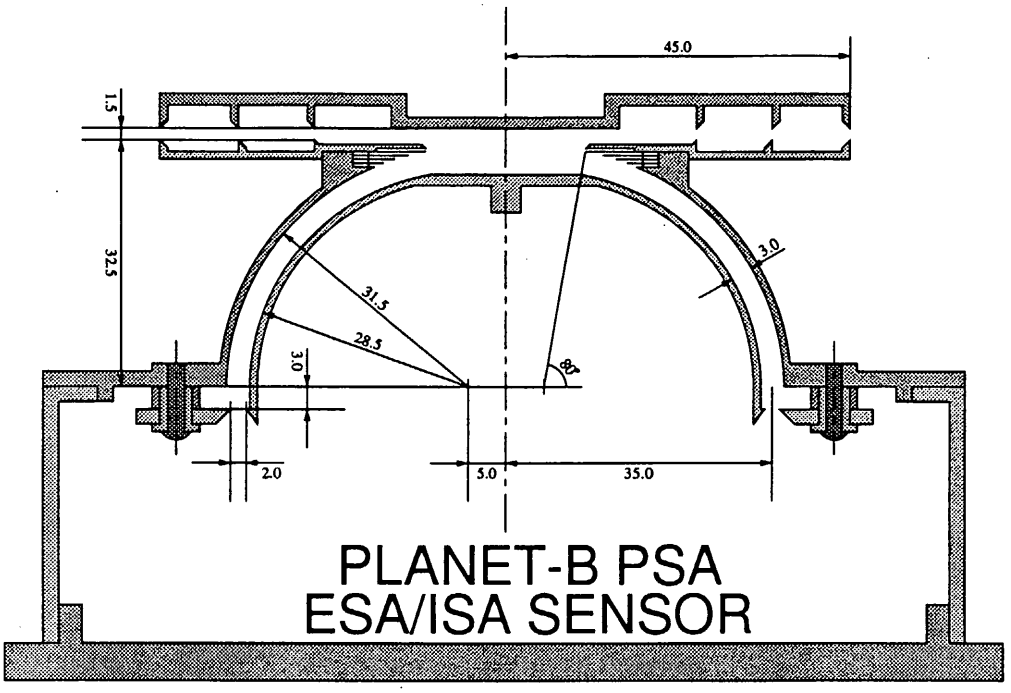

Fig. 2.1.3.1-1

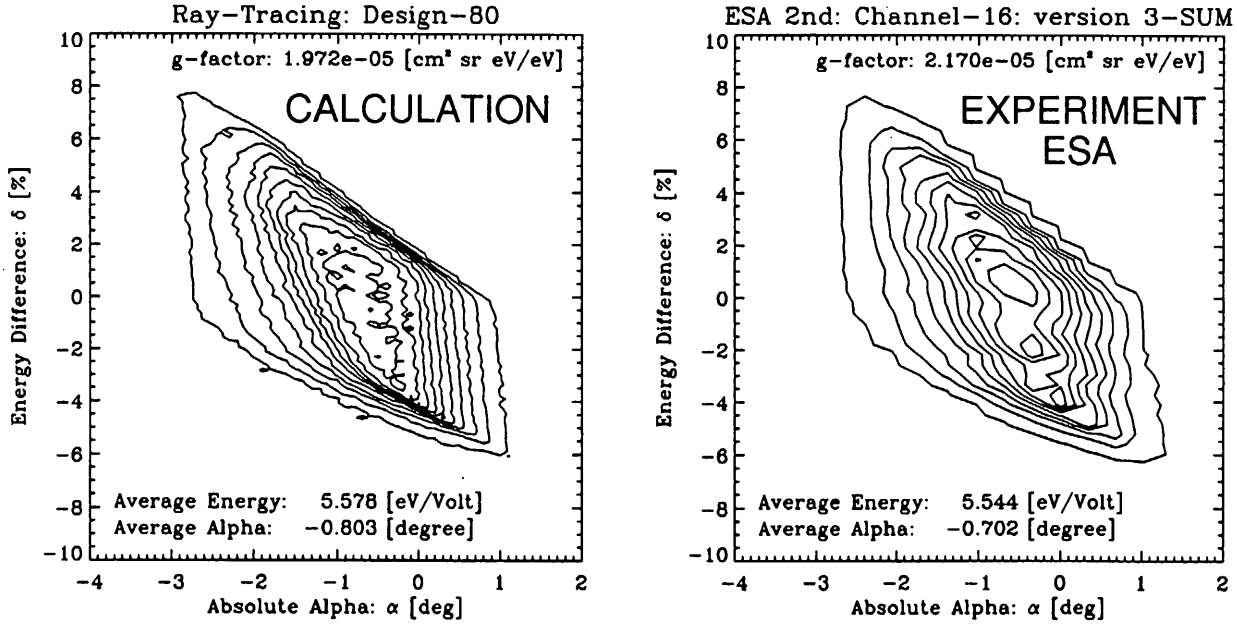

Fig. 2.1.3.1-2

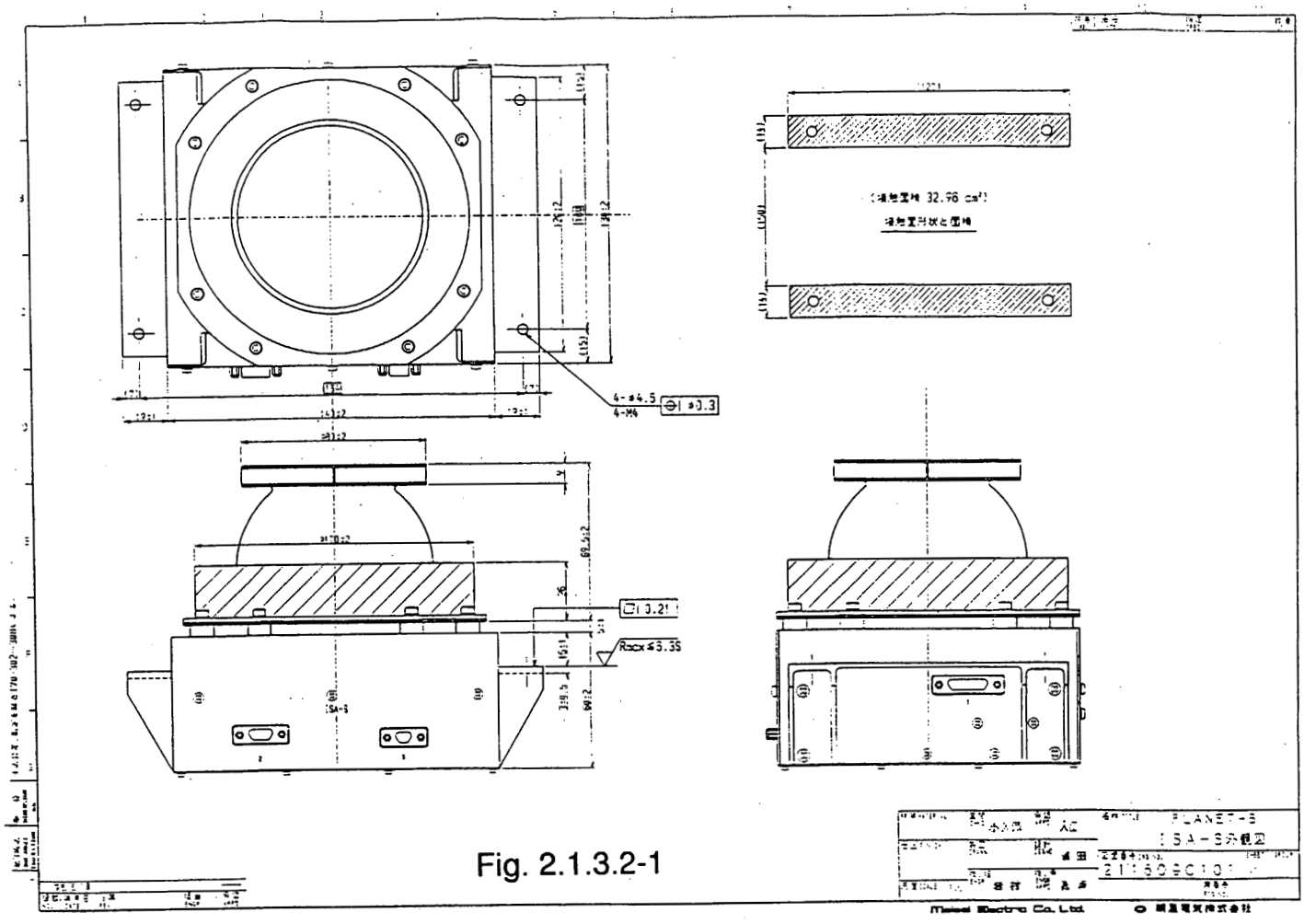

Fig. 2.1.3.2-1

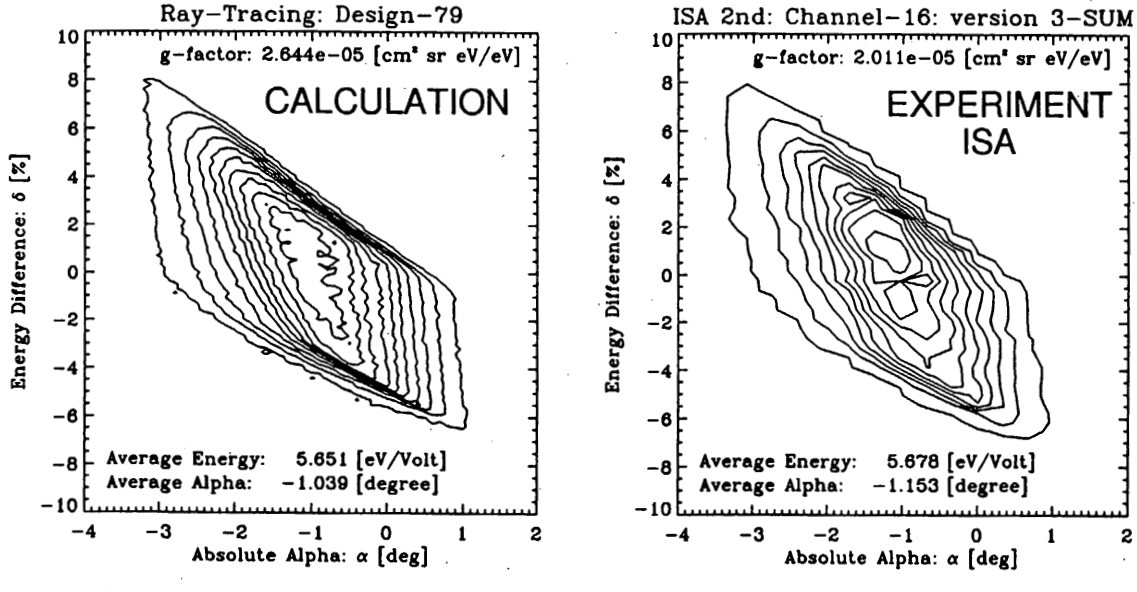

Fig. 2.1.3.2-2

well established DExE method. The TOF-E telescope looks in the 0 degree direction while a pair of DExE Si-detector telescopes are oriented in the 180 degree direction. The TOF-E telescope mainly measures the composition of low energy ions (H, He, CNO, NeMgSi, Fe) and DExE telescopes are mainly used to measure ion composition at higher energies and electron component. The characteristics of the EIS system is summarized in Table 2.1.3.3-1. The EIS subsystems are described below.

1) The TOF-E Telescope

The EIS TOF-E telescope consists of aluminum collimator followed by a thin foil and Si detector with an effective geometric factor of 0.013 cm^2sr. The thin parylene front foil (about 10mg/cm^2 in total thickness), which is mounted on about 78% transparency stainless steel grid, is doubly aluminized to reject both light and scattered La-ray background. The TOF-path determined by the foil and the rear Si-detector is 4 cm. The incoming charged particle strikes the foil and emits a number of secondary electrons out of the thin foil and these are electrostatically accelerated and reflected through 90degree into microchannel plates (MCPs) and start the timing measurement. The incident particle are stopped in the Si-detector. The pulse height from the detector signal provides the particle kinetic energy E. Secondary electrons from the front surface of the Si-detector enter another MCP after the deflection at electrostatic mirror and provide the stop signal for the timing measurement. Using the time and energy information, particle species are identified and mass of the ions is obtained. The MCPs used in the telescope are 14mm diameter, 12mm pore size, a-ratio=40, 300MW plates and a gain of $7x10^6$ (@2kV).

Fig.2.1.3.3-2 shows the TOF-Energy relation for various elements. The resolution depends on the atomic number Z and the particle energy E. At higher Z and lower energy, the resolution limit is set by the spread of pulse-height-defect in the E-detector, while at higher energies the limiting factor is the timing resolution of about 1.0 ns in the TOF system. Spectral and elemental resolution is obtained from 256-channel pulse-height analysis of the energy and TOF timing signals for individual events.

The TOF-E telescope with the geometric factor of 0.013 cm^2sr measures H, He, CNO, NeMgSi in the energy range from 40 keV/n to >400 keV/n.

2) DExE Telescopes

The telescope system is based on the well known principle of measuring the incoming ion and electron fluxes in two telescopes. A thin foil protects one of them, called SiA, in order to prevent from the sun light and low energy ions from reaching the detector while allowing the passage of electrons. The other, called SiB, which has no foil, records both ions and electrons above an energy threshold determined by the detector noise (30keV). The foil absorber in front of SiA is composed of 150 mg/cm^2 (total thickness) of polyimid coated with aluminum.

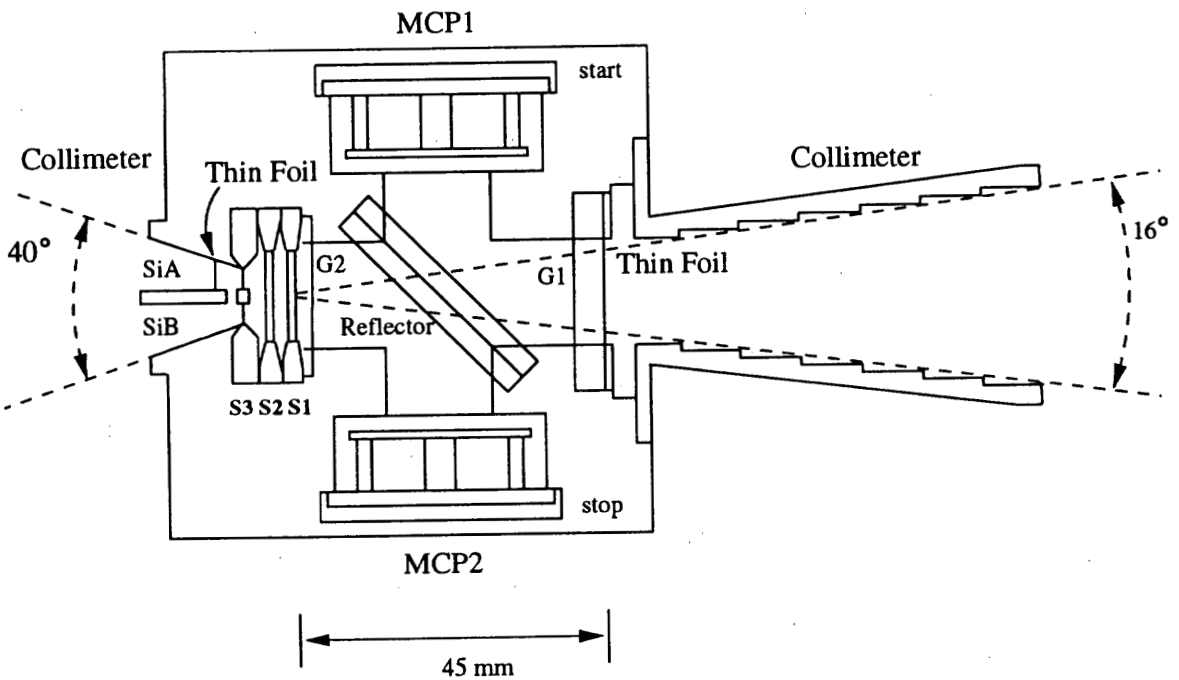

Fig.2.1.3.3-1 Schematic Drawing of Electron and Ion Composition Spectrometer (EIS)

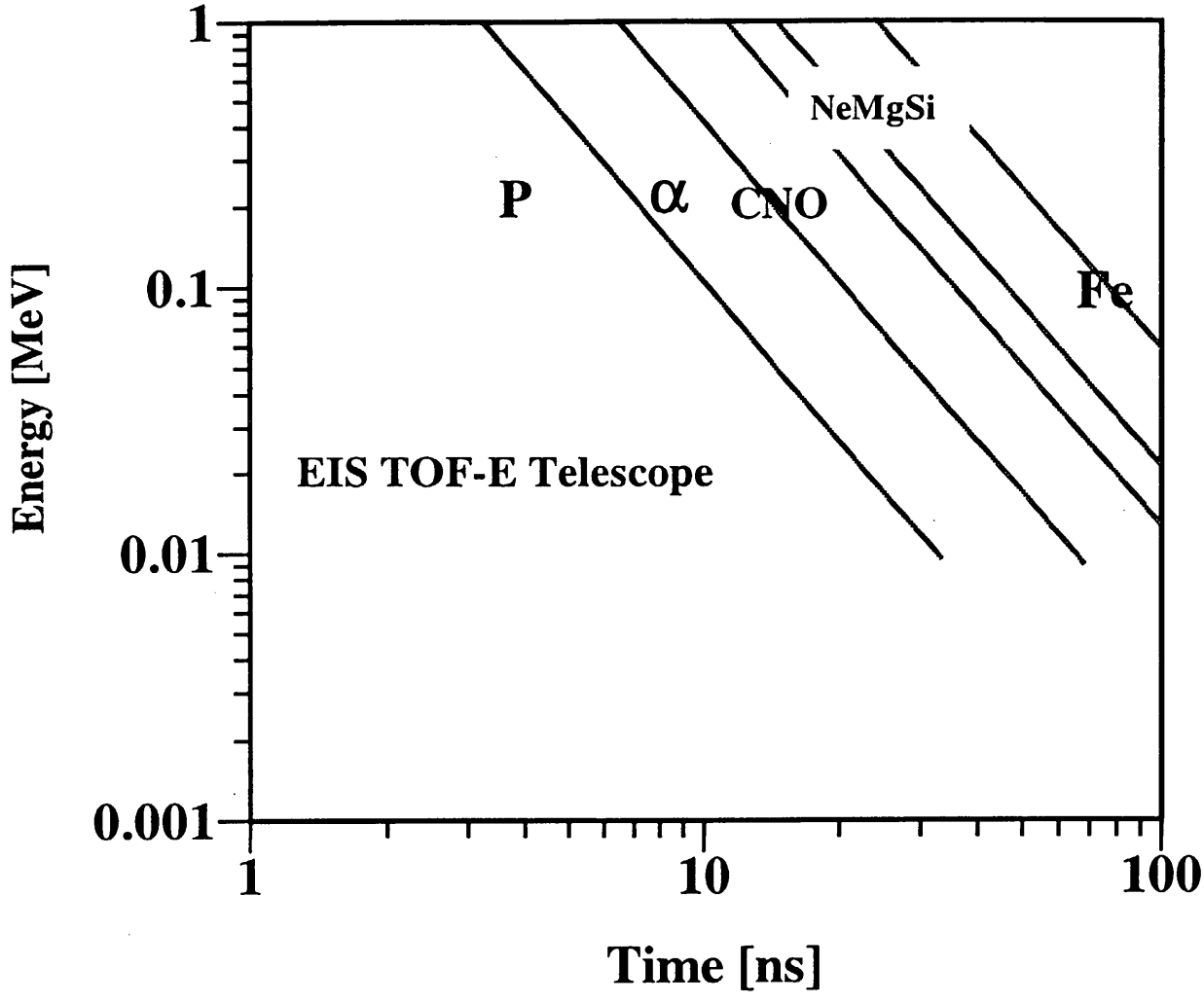

Fig.2.1.3.3-2 Theoretical Response of various Ions for EIS TOF-E Telescope

Using a 30 keV threshold, this corresponds to E >90keV for protons (120keV for He). The SiB detectors simultaneously count electrons and low energy ions above an threshold of 30 keV.

Schematic drawing of the DExE is shown in Fig. 2.1.3.3-1 Each telescope consists of a thin Si detector (S3A/B) followed by common detectors (S1 and S2). S3A/B is 3mm dia., 10mm thick, S1 and S2 is each 14mm in dia., 460mm thick. The SiA and SiB telescopes look the direction from 0degree to 40 degree against the spacecraft plane and from 0 degree to –40 degree, respectively. An aluminum collimator located in front of S3A/B detector defines apertures for each telescope. This yields geometric factors for each telescope 0.013 cm^2sr. The collimator has a baffled structure to reduce scattering of light and electrons. Counting rate difference between the two telescopes allows protons and electrons to be distinguished.

In each telescopes, the S3 and S2 detectors are primarily operated in coincidence with energy loss DE measured in S3 and residual energy measured in S2. The S1 is basically employed as the anticoincidence detector in the DExE telescope. Fig. 2.1.3.3-3 shows DExE tracks for various element e, H and He over a wide range of energies. The telescopes with the geometric factor of 0.047 cm^2sr measure electrons from 50 to 400 keV, and H and He from 30 to >400 keV/n.

3) Electronics System

As shown in Fig. 2.1.3.3-4 and Fig. 2.1.3.3-5, electronic circuit of EIS consists of two parts. One is a analog part set in the EIS-S box and another is a digital part (EIS-E) set in the PSA-E box. Charge signals from silicon detectors are amplified by charge sensitive pre-amplifiers and shaped by shaping-amplifiers in EIS-S DE-E analog part. And then they are feed to ADCs in EIS-E to convert to digital signals. Time difference between start and stop signal from two MCPs is converted to analog pulse height signal by EIS-S TOF analog part and feed to ADC in EIS-E. Digital data from ADCs are used as address of two-dimensional reference tables. The first table is the matrix of flight-time and energy of incoming charged particles. The signal pair of flight-time and energy falls into one position on the reference table and the corresponding counter is added by one. Another table is a matrix of DE and E to measure light particles. Two add one tables are made like as the reference tables, but they hold data event by event to see the three dimensional spectra for both telescope. The contents of counters are packed and send to SYSTEM-DHU by SI-CPU. SI-CPU also analyze the command from DHU and control all circuits.

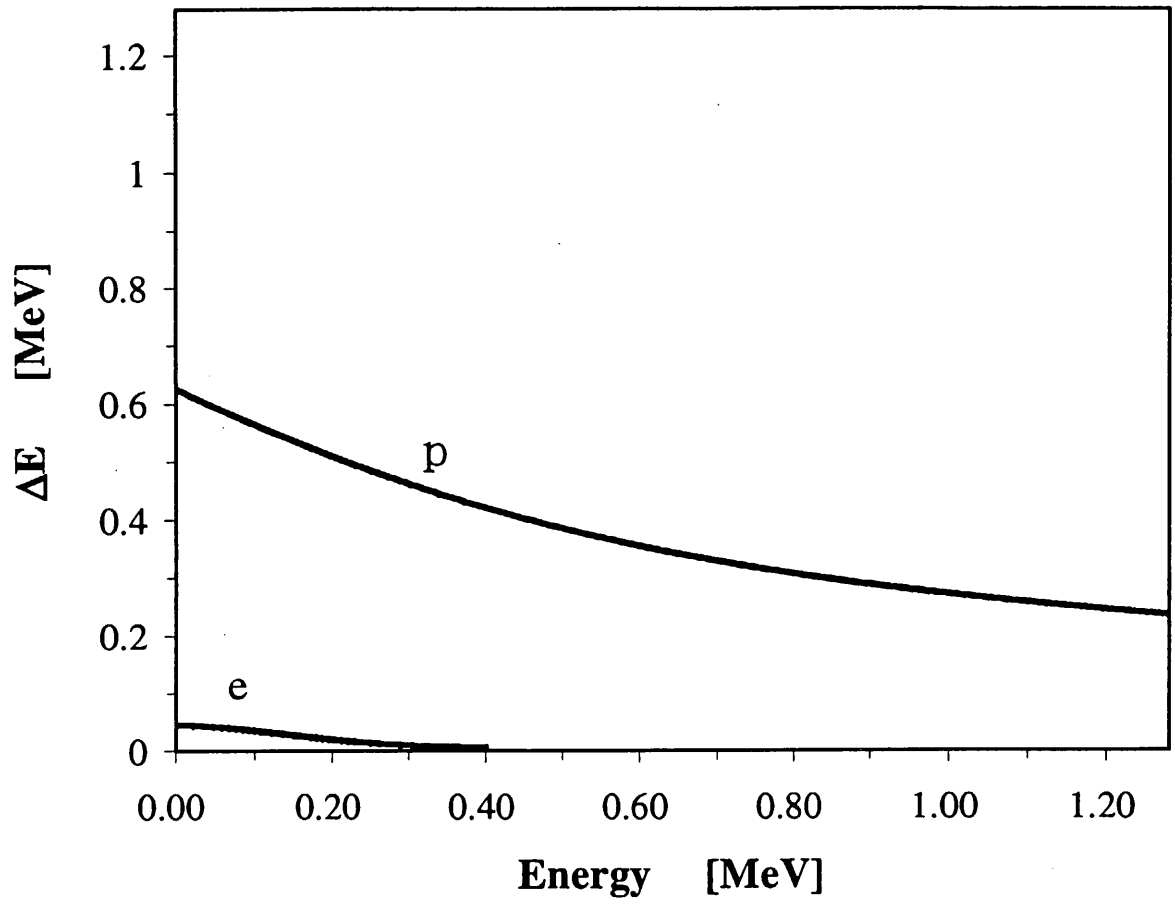

Fig.2.1.3.3-3 Theoretical Response of Electron and Proton Particle for EIS ΔE×E Telescope

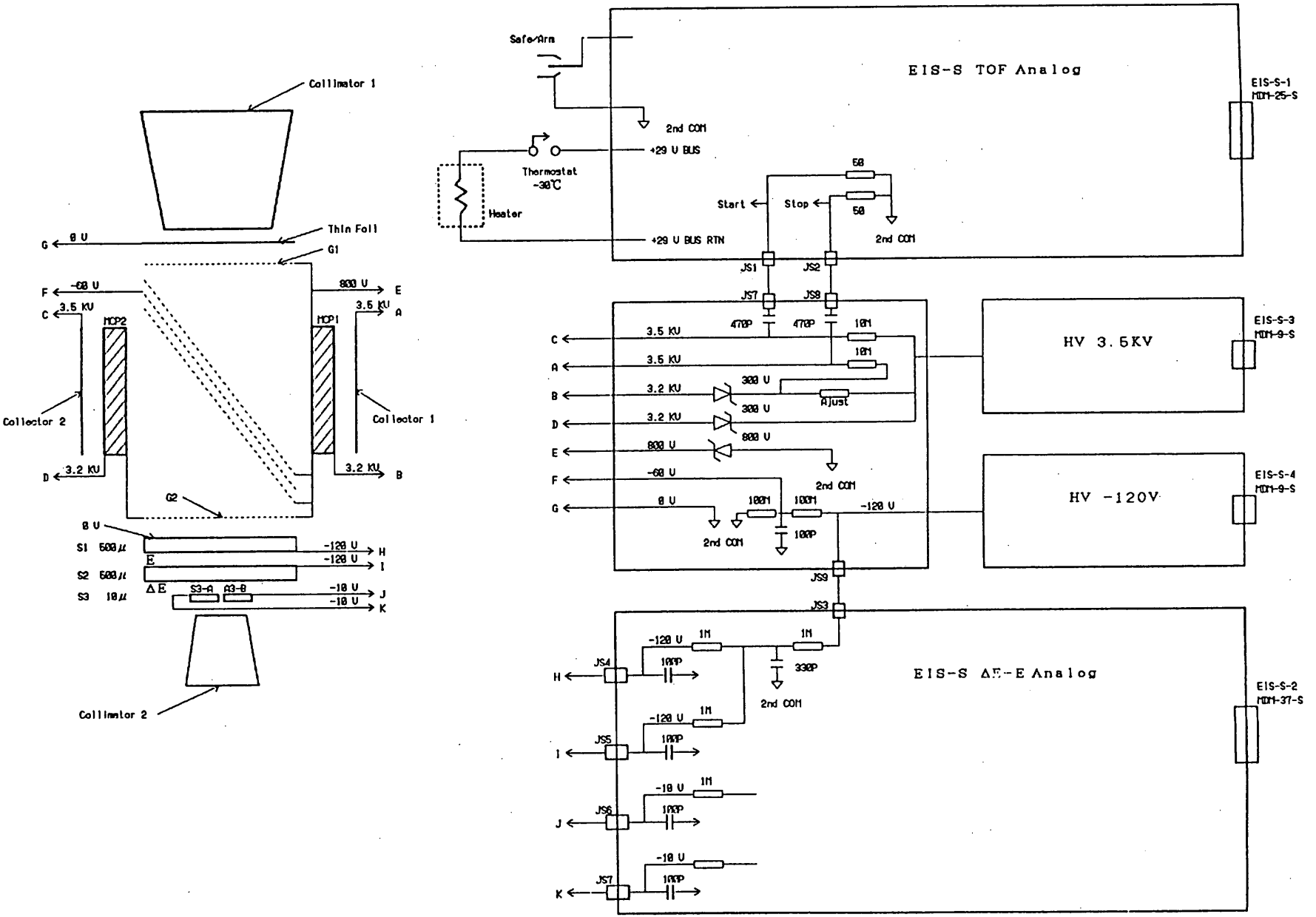
Collimator 1
Thin Foil
G1
G2
Collimator 2
Collector 2
Collector 1
MCP2
MCP1
S1 500μ
S2 500μ
S3 10μ
ΔE
E
S3-A
S3-B
Safe/Arm
2nd COM
+29 V BUS
Thermostat
-30℃
Heater
+29 V BUS RTN
Start
Stop
EIS-S TOF Analog
EIS-S-1
MDM-25-S
HV 3.5KV
EIS-S-3
MDM-9-S
HV -120V
EIS-S-4
MDM-9-S
EIS-S ΔE-E Analog
EIS-S-2
MDM-37-S
Ajust

Fig. 2.1.3.3-4

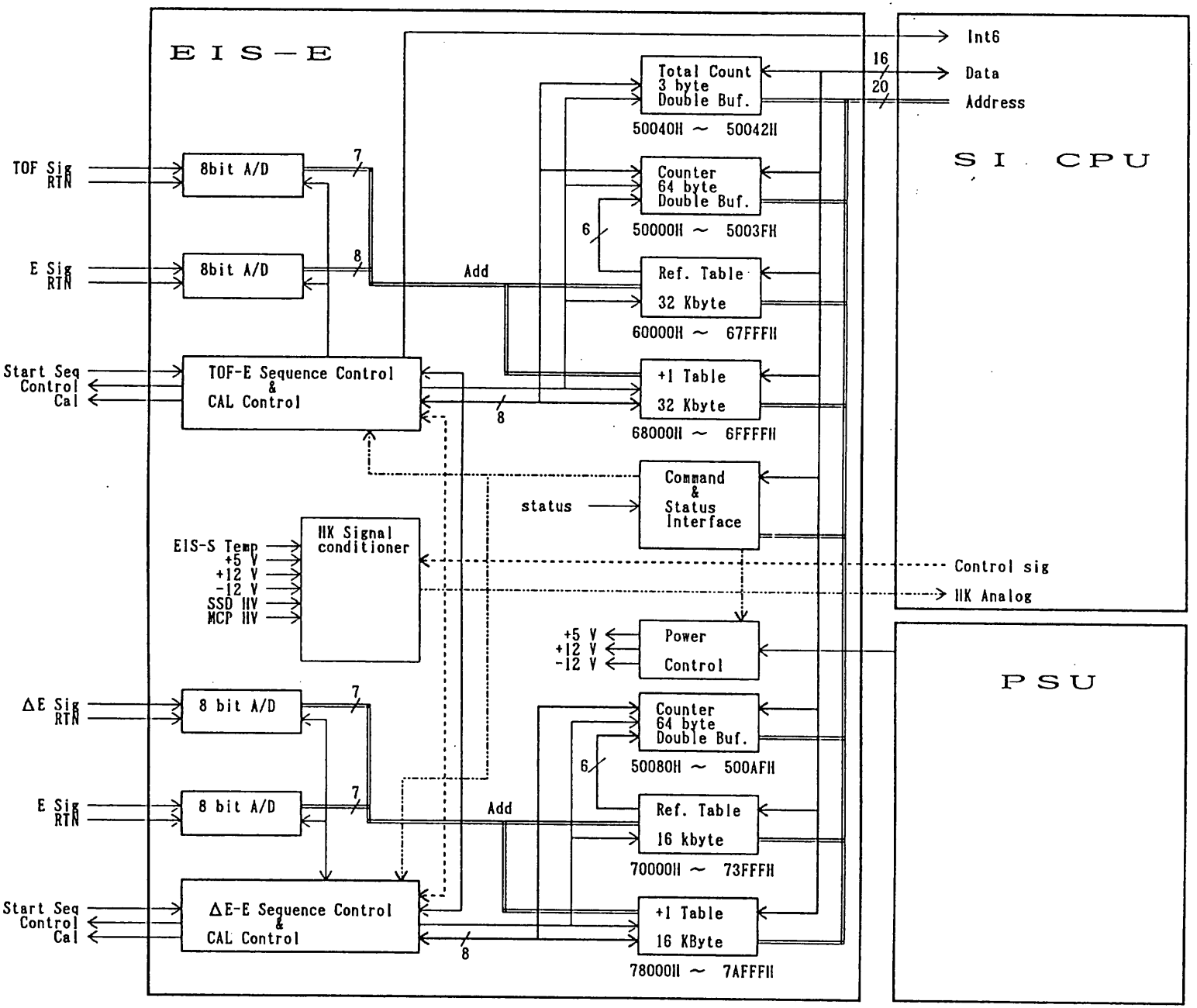
EIS—E
TOF Sig
RTN
E Sig
RTN
Start Seq
Control
Cal
8bit A/D
8bit A/D
TOF-E Sequence Control
&
CAL Control
7
8
Add
8
Total Count
3 byte
Double Buf.
50040H ~ 50042H
Counter
64 byte
Double Buf.
50000H ~ 5003FH
6
Ref. Table
32 Kbyte
60000H ~ 67FFFH
+1 Table
32 Kbyte
68000H ~ 6FFFFH
Command
&
Status
Interface
status
HK Signal
conditioner
EIS-S Temp
+5 V
+12 V
-12 V
SSD HV
MCP HV
+5 V
+12 V
-12 V
Power
Control
ΔE Sig
RTN
E Sig
RTN
Start Seq
Control
Cal
8 bit A/D
8 bit A/D
ΔE-E Sequence Control
&
CAL Control
7
7
Add
8
Counter
64 byte
Double Buf.
50080H ~ 500AFH
6
Ref. Table
16 kbyte
70000H ~ 73FFFH
+1 Table
16 KByte
78000H ~ 7AFFFH
16
20
Int6
Data
Address
SI CPU
Control sig
HK Analog
PSU

Fig. 2.1.3.3-5

2.1.3.4 XUV-S

The XUV is adjusted to detect 30.4nm and 58.4nm line intensity. To simplify the instrument system, no imaging information is available with this scanner. It consists of a multi-layer coated mirror to focus XUV light, filters to eliminate long wavelength light, microchannel plates (MCP) to amplify the signal. Pre-amplifiers are placed aside the telescope. Fig. 2.1.3.4-1 shows the schematic configuration of the scanner.

The frame of the scanner is made of 0.4mm thick duralumin which makes the scanner very light weight. The hood is mounted in front of the XUV optics to attenuates stray lights from the outside of the field of view. The scanner is placed on the side wall of the spacecraft.

A Mo/Si multi-layer coated mirror reflects preferentially 30.4nm XUV light. Maximum reflectivity is 24% at 30.4nm and the full-width-half-maximum is about 4nm. The reflectivity above 50nm again increases.MCP plates with 27 bias angles are used. The first stage of the MCP is coated with CsI to increase the efficiency of photon detection up to 15%. A 3kV high voltage is applied to the MCP.

Two filters are placed at off focal plane between the mirror and the MCP to eliminate long wavelength XUV up to visible lights. The front filter protects the MCP when the sun comes into the field of view of the scanner. This situation will happen only at a limited brief period at the re-orientation of the spacecraft. The rear filter is separated into 2 parts (Fig. 2.1.3.4-2) and one half of it (Filter-A) cut the light whose wavelength is longer than 40nm. The transmittance of Filter-A is 18% at 30.4nm and 0.7% at 58.4nm. The other part (Filter-B) pass both 30.4nm (50%) and 58.4nm (40%) XUV lights. The signal is picked up by 4 anodes behind the MCP. Two of them have 1mm radius and the other two have 2mm radius to have 1.6 ° and 3.2° field of view, respectively. A pair of 1 and 2mm anodes placed back of the Filter-A are used to detect 30.4nm XUV light and the other pair is placed back of the Filter-B to detect the sum of 30.4nm and 58.4nm XUV light. Table 2.1.3.4-1 shows the specifications of the scanner. Fig. 2.1.3.4-3 shows the transmittance of the filters, reflectivity of the mirror, and the total sensitivity of the scanner as a result of multiplying the mirror reflectivity, filter transmittance and the MCP quantum efficiency.

2.1.3.5 PSA-E

PSA-E is constructed from following four parts ,i.e. (1)Power Converter, (2)SICPU/PIM board, (3)EIS control board, and (4)PAX control board.

(1) Power Converter

Type 2 Power Supply Unit (PSU) is used as Power Converter.

Detailed description of PSU is given in Section 6.5.2.

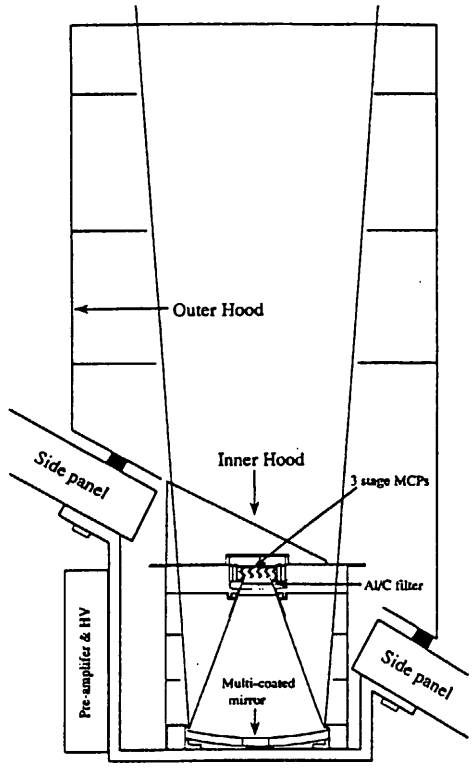

Figure 2.1.3.4-1

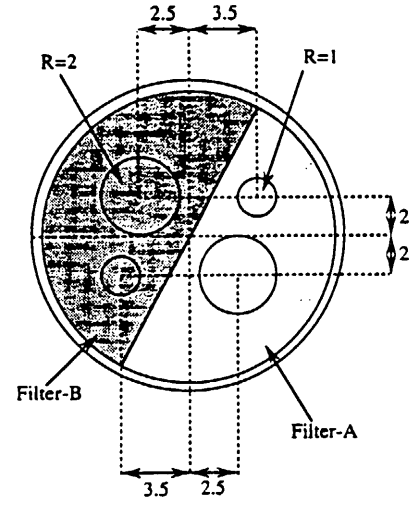

Figure 2.1.3.4-2

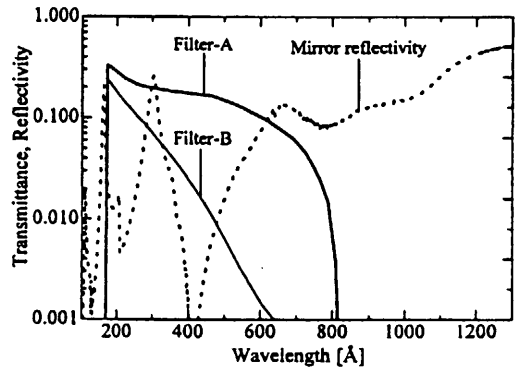

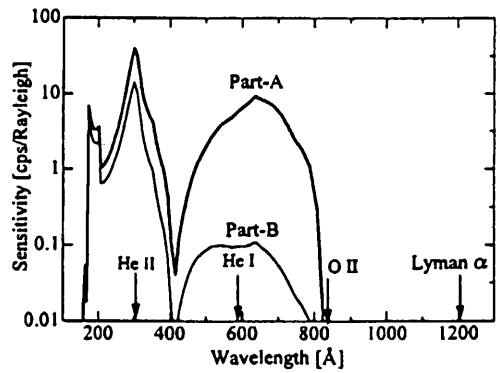

Figure 2.1.3.4-3

(2) SICPU/PIM board

This unit controls commands and telemetry interface between s/c system. Commands are decoded in this unit and distributed to EIS and PAX control boards. HK data and EIS telemetry data are compiled in this unit and transferred to DHU. PAX data is transferred from PAX control board to DHU through this unit. 80C86 8Mhz CPU with 512kB RAM is used as SI-CPU. Detailed description of PIM is given in Section 4.4.

(3) EIS control board

This unit converts digital control signals into analog signals and pass them to the sensor. This unit also converts sensor analog output to digital data and accumulate the data into corresponding RAM address. The data stored in RAM is processed by SI-CPU and sent to DHU.

(4) PAX control board

This unit controls ESA, ISA, and XUV sensors. H32 OBC is placed in this unit to control sensor HVs and compiles data. Commands are decoded in a FPGA and passed to H32 OBC. Onboard calculation of plasma moment data (density, velocity, and temperature) and compression of velocity distribution function are also performed by H32 OBC.

2.1.4 Size,Weight, and Power Consumption

2.1.4.1 Size & Weight

Component	Size(mm x mm x mm)	Weight(kg)
PSA-E	311x230x65	2.07 +/- 0.3
ISA-S	140x130x135	1.2 +/- 0.1
ESA-S	140x130x135	1.2 +/- 0.1
EIS-S	80x155x192	0.95 +/- 0.1
XUV-S	160ϕx338	0.824

2.1.4.2 Power Consumption

PSA Total

Operation Mode		+5 V (mA)	+12 V (mA)	-12 V (mA)	+29 V (mA)	+27V Bus (mA)	+19V Bus (mA)
Stand-by 1 (CPU+H32)	Max Ave	970 790	34	25			
Stand-by 2 (CPU+H32+SI)	Max Ave.	1358 1178	427	288			
All HV/SV ON	Max Ave	1370 1185	557	308			
All Heater ON	Max Ave						665 +/- 320

CPU/H32

Operation Mode		+5 V (mA)	+12 V (mA)	-12 V (mA)	+29 V (mA)	+27V Bus (mA)	+19V Bus (mA)
PSU ON	Ave	340	20	25			
Stand-by 1 (CPU+H32)	Ave	640	20	25			
Stand-by 2 (CPU+H32+SI)	Ave	970	550	394			
ALL HV ON	Ave	970	670	408			

ESA

Operation Mode		+5 V (mA)	+12 V (mA)	-12 V (mA)	+29 V (mA)	+27V Bus (mA)	+19V Bus (mA)
PSU ON	Ave	0	0	0			
Stand-by 1 (CPU+H32)	Ave	0	0	0			
Stand-by 2 (CPU+H32+SI)	Ave	1 +/- 1	58 +/- 5	54 +/- 5			
ALL HV ON	Ave	1 +/- 1	88 +/- 5	58 +/- 5			

ISA

Operation Mode		+5 V (mA)	+12 V (mA)	-12 V (mA)	+29 V (mA)	+27V Bus (mA)	+19V Bus (mA)
PSU ON	Ave	0	0	0			
Stand-by 1 (CPU+H32)	Ave	0	0	0			
Stand-by 2 (CPU+H32+SI)	Ave	1 +/- 1	60 +/- 5	54 +/- 5			
ALL HV ON	Ave	1 +/- 1	88 +/- 5	58 +/- 5			

EIS

Operation Mode		+5 V (mA)	+12 V (mA)	-12 V (mA)	+29 V (mA)	+27V Bus (mA)	+19V Bus (mA)
PSU ON	Ave	0	0	0			
Stand-by 1 (CPU+H32)	Ave	0	0	0			
Stand-by 2 (CPU+H32+SI)	Ave	1 +/- 1	280 +/- 5	138 +/- 5			
ALL HV ON	Ave	1 +/- 1	320 +/- 5	142 +/- 5			

XUV

Operation Mode		+5 V (mA)	+12 V (mA)	-12 V (mA)	+29 V (mA)	+27V Bus (mA)	+19V Bus (mA)
PSU ON	Ave	0	0	0			
Stand-by 1 (CPU+H32)	Ave	0	0	0			
Stand-by 2 (CPU+H32+SI)	Ave	6 +/- 2	0	0			
ALL HV ON	Ave	6 +/- 2	20 +/- 4	2 +/- 1			
XUV HTR ON	MAX Ave					225 +/- 34 87 +/- 13	160 +/- 24 122 +/- 18

2.1.5 Operation

Each sensors of PSA are operated continuously except for attitude/orbital maneuver and eclipse. Operations during eclipse is depending on the power allocation for PSA. Time resolution of the PSA data is changed depending on the allocated telemetry rate. All of the HV units are controlled by PSA-E.

In the HV on/off sequences, HV outputs are changed slowly (20~50V/second) by onboard CPUs to avoid HV discharge.

One third of the allocated packets are used to transmit EIS data and two thirds of the packets are for PAX (ESA,ISA, and XUV) data. Data aquisition and operation modes for each components are described below.

2.1.5.1 ESA Operation

Spin phase synchronized data are acquired. 32 energy step x 32 (sensor elevation) sector data within a plane which contain satellite spin axis is obtained with 1/64 spin. Obtained data are sorted with pitch angle based on the onboard magnetic field detector data. The converted 2-D pitch angle data is accumulated with 1 or more spins depending on the allocated telemetry rate .

PAX DATA MODE	edit rate	3-D count data	2-D count data [1)]
Mode 00 01 40 41	H[2)]	8 : polar 16 : azimuth 32: energy	N.A.
(Standard Mode 00 01) (XUV Mode 40 41)	L[3)]	N.A.	8 : pitch angle 16 : energy
Mode 02 03 42 43	H	N.A.	18 : pitch angle 32 : energy
(Standard Mode 02 03) (XUV Mode 42 43)	L	N.A.	8 : pitch angle 16 : energy

1) pitch angle sorted data

2) edit rate H : 64kbps, 32kbps, 16kbps

3) edit rate L : 8kbps, 4kbps, 2kbps, 1kbps, 512bps, 256bps, 128bps, 64bps

2.1.5.2 ISA Operation

Spin phase synchronized data is acquired. Same as ESA, 32 energy step x 32 (sensor elevation) sector data within a plane which contains satellite spin axis is obtained with 1/64 spin. Obtained data are accumulated with 1 or more spins depending on the allocated telemetry rate. Moment data (density, velocity, temperature) are calculated from the

accumulated data. 3-D velocity distribution function data are compressed and transmitted. Transmission data rate for both moment data and compressed 3-D velocity distribution data are depending on the allocated telemetry rate.

PAX DATA MODE	edit rate	3-D count data	3-D velocity moment[1)]
Mode 00 02 40 42	H[2)]	8 : polar 16 : azimuth 32: energy + Solar Wind data[4)]	N:2 NV:6 P:12 (NVT mode) or N:6 NV:18 (NV mode)
(Standard Mode 00 02) (XUV Mode 40 42)	L[3)]	4 : polar 8 : azimuth 16: energy + Solar Wind data	N:2 NV:6 P:12 (NVT mode) or N:6 NV:18 (NV mode)
Mode 01 03 41 43	H	8 : polar 16 : azimuth 32: energy + Solar Wind data	N:2 NV:6 P:12 (NVT mode) or N:6 NV:18 (NV mode)
(Standard Mode 01 03) (XUV Mode 41 43)	L	6 : direction 32: energy + Solar Wind data	N:2 NV:6 P:12 (NVT mode) or N:6 NV:18 (NV mode)

1) NVT mode and NV mode can be selected by PAX CNT SET command

2) edit rate H : 64kbps, 32kbps, 16kbps

3) edit rate L : 8kbps, 4kbps, 2kbps, 1kbps, 512bps, 256bps, 128bps, 64bps

4) solar wind direction is determined by Solar Wind Map Table

2.1.5.3 EIS Operation

Spin phase synchronized data and integration data are aquired.

The EIS packet is further classified into a real packet and a compressed packet. The real packet and the compressed packet have the status header of EIS (24 bytes and 14 bytes) at the top, respectively. Delay data(compressed packet) of EIS consists of a block that collected the compressed packet from packet counter 0 to 255 except for the header of this packet. It is compressed by the way of zero order arithmetic coding and we will obtain delay data of a 432byte unit with the same composition as a real packet by expanding it. The data acquisition time of a high-energy particle event with flux few is made in four times of the time of a low-energy particle event under the situation that the telemetry rate is low. Therefore when a part of the data acquisition time of arbitrary elements are four times, the data acquisition time of the counter by the side of high energy is four times.

On the cruising phase to Mars, real packet is transmitted to Earth every 64 spins and compressed data is in the rest packet. The idea that fixes the number of counter per 1 sector to 40 and lengthens acquisition time of data compensated such an especially severe

communication environment at this time. This period is for a calibration of TOF-E detector for heavy elements, a calibration of proton flux with TOF detector comparing with DE-E detector and an observation of middle energy cosmic rays, composition and energy spectra, in the interplanetary space. So EIS are operated continuously with the observation mode will be "TOF-E priority mode" and "TOF-E calibration mode.

On the Mars orbiting phase, real packet is transmitted to Earth every eight spins with 16kbps or more and is every 64 spins with the other telemetry rate, and compressed data is in the rest packet. Moreover we created five forms for various demands although it is a principle that acquisition time of data is time of 8 spins when telemetry is 16kbps and more and is time of 64 spins when other. There are "the normal model" which observe a proton with the TOF-E telescope, "the normal mode2" which observe a proton with the DE-E telescope, "the TOF-E priority mode" which observe only with the TOF-E telescope, "the DE-E priority mode" which observe only with the DE-E telescopes and "the EPO mode" which CNO group is observed preponderantly as mode. Those mode will be selected respectively for every science object.

2.1.5.4 XUV Operation

Data are obtained every 1/64 spin in 109° around the spacecraft rotation axis. The data are accumulated only when the XUV is pointed toward the Mars. Data through Filter-A and Filter-B are not available simultaneously, because only one anode out of 4 is selected in the observation. The FOV is also fixed to 1.6 or 3.2° with the same reason. Data are accumulated onboard and sent to the telemetry where the accumulation rate is changed due to the available telemetry rate. The XUV has large telemetry rate when the telemetry format is in the UVS-XUV mode. This format is available when the satellite is located near the Mars. Word allocation of XUV is listed in the Section 2.1.6.2.3.

2.1.6 Command and Telemetry Consumption

2.1.6.1 Command Items

2.1.6.1.1 Discrete Commands

XY	Command Name	Function	+BC	Telemetry
01	PSA_CPU_ON	PSA SI-CPU turn on		PSA1 Bit7 = 1
10	PSA_HTR_ENA	PSA Heater Enable		PSA1 Bit3 = 1
11	PSA_HTR_DIS	PSA Heater Disable		PSA1 Bit3 = 0
12	PSA_ECC_ENA	PSA ECC Enable		PSA1 Bit2 = 1
13	PSA_ECC_DIS	PSA ECC Disable		PSA1 Bit2 = 0
14	PSA_WDT_ENA	PSA Watch-dog Timer Enable		PSA1 Bit5 = 1

15	PSA_WDT_DIS	PSA Watch-dog Timer Disable		PSA1 Bit5 = 0
16	PSA_CPU_RUN	PSA SI-CPU Run		PSA1 Bit6 = 1
17	PSA_CPU_RST	PSA SI-CPU Reset		PSA1 Bit6 =0
18	PSA_I_LIMIT_ENA	PSA Current Limiter Enable		---
19	PSA_I_LIMIT_DIS	PSA Current Limiter Disable		---
20	PSA_BUS_ACC_ENA	PSA Bus Access Enable		---
21	PSA_BUS_ACC_DIS	PSA Bus Access Disable		---
22	MOD_CHANGE	Telemeter Mode Change		---
E0	PSA_ACTIVATE	Activate PSA	+BC(1)	
C0	PSA_SHUTDOWN	Shutdown PSA	+BC(1)	

80	EIS_ON	EIS System Control Power ON		PSA2 Bit0 =1
A0	EIS_OFF	EIS System Control Power OFF		PSA2 Bit0 =0
86	EIS_CAL_ON	EIS Cal ON		PSA2 Bit7=1
A6	EIS_CAL_OFF	EIS Cal OFF		PSA2 Bit7=0
88	EIS_ANTI_ENA	EIS Anticoincidence Enable		PSA2 Bit6=1
A8	EIS_ANTI_DIS	EIS Anticoincidence Disable		PSA2 Bit6=0
8A	ADD_ONE_ENA	EIS Add One Enable		PSA2 Bit5=1
AA	ADD_ONE_DIS	EIS Add One Disable		PSA2 Bit5 =0
96	DET_AUTO	EIS Detector S3A/B Auto		---
92	DET_FIX	EIS Detector S3A/B Fix	+BC(1)	---
82	EIS_HV_ENA_SET	EIS HV "ON" Enable	+BC(1)	PSA2 Bit1,2
A2	EIS_HV_DIS_SET	EIS HV "ON" Disable	+BC(1)	PSA2 Bit1,2
84	EIS_HV_ON_SET	EIS HV Turn ON	+BC(1)	PSA2 Bit3,4
A4	EIS_HV_OFF_SET	EIS HV Turn OFF	+BC(1)	PSA2 Bit3,4
8E	EIS_HV_CTL_SET	EIS SSD/MCP HV Voltage Control	+BC(2)	---
8C	EIS_DISC_SET	EIS Dirimination Level Set	+BC(1)	---
90	EIS_CNT_SET	EIS System Control	+BC(7)	---

30	PAX_ON	ESA,ISA,XUV Control Power ON		PSA3 Bit0 =1
31	PAX_OFF	ESA,ISA,XUV Control Power OFF		PSA3 Bit0 =0
40	PAX_HV_ENA_SET	ESA,ISA,XUV HV "O N" Enable	+BC(1)	PSA4 PSA5
42	PAX_HV_ON_SET	ESA,ISA,XUV HV turn on	+BC(1)	PSA4 PSA5
44	PAX_HV_OFF_SET	ESA,ISA,XUV HV turn off	+BC(1)	PSA4 PSA5
60	PAX_HV_SET	ESA,ISA,XUV HV Voltage Control	+BC(2)	---

50	PAX_HV_SCAN_SET	ESA,ISA,XUV HV Scan Voltage Set	+BC(2)	---
61	PAX_CNT_SET	ESA,ISA,XUV System Control	+BC(2)	---
46	H32_CNT_SET	H32 Control	+BC(1)	---
4A	H32_ST_ADRS_SET	H32 Start Address Set	+BC(4)	---
62	ESA_CNT_SET	ESA System Control	+BC(1)	---
63	ISA_CNT_SET	ISA System Control	+BC(1)	---
64	XUV_FOV_SET	XUV Field of View Set	+BC(1)	---
32	H32_ON	H32 Power On		PSA3 Bit7 =1
33	H32_OFF	H32 Power Off		PSA3 Bit7 =0

2.1.6.1.2 Block Commands

	B0	**B1**	**B2**	**B3**	**B4**	**B5**	**B6**	**B7**	
EIS HV ENA SET	Not Used						MCP	SSD	
							*1	*2	
EIS HV DIS SET	Not Used						MCP	SSD	
							*3	*4	
EIS HV ON SET	Not Used						MCP	SSD	
							*5	*6	
EIS HV OFF SET	Not Used						MCP	SSD	
							*7	*8	

*1 EIS_SSD_HV_ENA, *2 EIS_MCP_HV_ENA
*3 EIS_SSD_HV_DIS, *4 EIS_MCP_HV_DIS
*5 EIS_SSD_HV_ON, *6 EIS_MCP_HV_ON
*7 EIS_SSD_HV_OFF, *8 EIS_MCP_HV_OFF

EIS SSD/MCP HV VOLTAGE CONTROL (2byte data)				
EIS HV CNT SET (2bytes Command)	SSD HV Control *1			
	Not Used	0	1	1st BC
	Not Used	Control Data		2nd BC
	MCP HV Control *2			
	Not Used	1	0	1st BC
	MCP HV Control Data (8bit)			2nd BC

*1 EIS_SSD_HV_SEL, *2 EIS_MCP_HV_SEL

EIS DISCRIMINATION LEVEL SET					
EIS DISC SET	Not Used	SSD3	SSD2	SSD1	
	4 Levels (0-3) for each SSD				

EIS DETECTOR S3A/B FIX									
EIS DET FIX	0	0	0	1	0	0	0	0	S3-A
	0	0	0	0	0	0	0	0	S3-B

EIS CNT SET									
	Table Dump Mode (3 bytes data) *1								
	0	0	0	0	0	0	0	1	1st BC
	Control data I								2nd BC
	Control data II								3rd BC
	Auto Integration Mode (1 byte) *2								
	0	0	0	0	0	0	1	0	1st BC
	Mode Change (2 byte data) *3								
	0	0	0	0	0	1	0	0	1st BC
	Observation Form			Observation Mode			T-Ref	E-Ref	2nd BC
	Integration Time Change (3 bytes data) *4								
	0	0	0	0	1	0	0	0	1st BC
	Integration Time (MSB)								2nd BC
	Integration Time (LSB)								3rd BC
	DE-E Table Line Shift (7 bytes data) *5								
	0	0	0	1	0	0	0	0	1st BC
	Table Line Shift Control Data (6 bytes)								2nd – 7th BC
	DE-E Table E-Line Shift (3 bytes data) *6								
	0	0	1	0	0	0	0	0	1st BC
	Table E-Line Shift Control Data (2 byte)								2nd – 3th BC
	TOF-E Table Line Shift (5 bytes data) *7								
	0	1	0	0	0	0	0	0	1st BC
	Table Line Shift Control Data (4 bytes)								2nd – 5th BC
	TOF-E Table E-Line Shift (2 bytes data) *8								
	1	0	0	0	0	0	0	0	1st BC
	Table E-Line Shift Control Data (1 byte)								2nd BC

*1 EIS_TABLE_DUMP, *2 EIS_AUTO_INTEG (not recommended)

*3 EIS_MODE_CHANGE, *4 EIS_INTEG_TIME_CHG (not recommended)
*5 EIS_DE_LINE_SHIFT, *6 EIS_E_LINE_SHIFT_ED
*7 EIS_TOF_LINE_SHIFT, *8 EIS_E_LINE_SHIFT_ET

EIS TABLE DUMP	Control data I	Control data II	
	00	00	Add-one TBL Dump
	10	00	Add-one TBL Clear
	20	00	Reference TBL Dump
	30	00	Store Area All Clear
	50	00	Data Memory Check Enable
	60	00	Data Memory Check Disable
	70	00	Add-one Memory Check
	80	00	TOF-E PHA of Energy
	90	00	TOF-E PHA of TOF
	A0	00	DE-E PHA of Energy
	B0	00	DE-E PHA of Delta-E
	Integration Time (unit:spin) *		Int. Add-one TBL & Dump

* This 2bytes data show "Integration time (spin)" except for the reserve ID indicated above.
Attention: "Mode_CHANGE" command must be issue after "Line-Shift", "PHA mode" and "Memory Check".

Command	B0	B1	B2	B3	B4	B5	B6	B7	
	Select HV to be enabled in PAX board								
PAX HV ENA SET	Not Used			ESA MCP	ESA SV	ISA MCP	ISA SV	XUV MCP	
				BIT = 1 : SELECT					
				*1	*2	*3	*4	*5	

*1 ESA_HV_MCP_ENA_SET *2 ESA_HV_SV_ENA_SET
*3 ISA_HV_MCP_ENA_SET *4 ISA_HV_SV_ENA_SET
*5 XUV_HV_MCP_ENA_SET

Command	B0	B1	B2	B3	B4	B5	B6	B7	
	Select HV to be turned on in PAX board								
PAX HV ON SET	Not Used			ESA MCP	ESA SV	ISA MCP	ISA SV	XUV MCP	
				BIT = 1 : SELECT					
				*1	*2	*3	*4	*5	

*1 ESA_HV_MCP_ON *2 ESA_HV_SV_ON

*3 ISA_HV_MCP_ON *4 ISA_HV_SV_ON

*5 XUV_HV_MCP_ON

Command	B0	B1	B2	B3	B4	B5	B6	B7	
	Select HV to be turned off in PAX board								
PAX HV OFF SET	Not Used			ESA MCP	ESA SV	ISA MCP	ISA SV	XUV MCP	
				BIT = 1 : SELECT					
				*1	*2	*3	*4	*5	

*1 ESA_HV_MCP_OFF *2 ESA_HV_SV_OFF

*3 ISA_HV_MCP_OFF *4 ISA_HV_SV_OFF

*5 XUV_HV_MCP_OFF

Command	B0	B1	B2	B3	B4	B5	B6	B7	
	PAX Control Data Set								
PAX CNT SET	Control Data (16 bits)								

Command	B0	B1	B2	B3	B4	B5	B6	B7	
	H32 Bus Control (1 byte)								
H32 CNT SET	Run/ Halt	Not Used				PC Ena/ Dis	Run/ Reset	Bus Ena/ Flt	
	Bit = 1 / 0								

*1 H32_RESET ((= H32 CNT SET 81)) *2 H32_RUN ((= H32 CNT SET 83))

*3 H32_HALT ((= H32 CNT SET 02))

*4 H32_RUN_INH_ENA ((=H32 CNT SET 87))

*5 H32_RUN_INH_DIS ((=H32 CNT SET 83))

Command	B0	B1	B2	B3	B4	B5	B6	B7	
	ESA, ISA, and XUV HV Output Level Control								
PAX HV SET (2 byte command)	XUV MCP HV								*1
	Not Used	0	0	0	0	0	0	1	1st
	HV Control Data (8 bits)								2nd
	ISA SV RAM								
	Not Used	0	0	0	0	0	1	0	1st
	Not Used						Control Data		2nd
	ISA MCP HV								*2
	Not Used	0	0	0	0	1	0	0	1st
	HV Control Data (8 bits)								2nd
	ESA SV RAM								
	Not Used	0	0	0	1	0	0	0	1st
	Not Used						Control Data		2nd
	ESA MCP HV								*3
	Not Used	0	0	1	0	0	0	0	1st
	HV Control Data (8 bits)								2nd
	ISA SV HV								*4
	Not Used	0	1	0	0	0	0	0	1st
	HV Control Data (8 bits)								2nd
	ESA SV HV								*5
	Not Used	1	0	0	0	0	0	0	1st
	HV Control Data (8 bits)								2nd

*1 ESA_HV_MCP_SET + BC(2nd:HV Control Data 8bits)

*2 ISA_HV_MCP_ SET + BC(2nd:HV Control Data 8bits)

*3 XUV_HV_MCP_ SET + BC(2nd:HV Control Data 8bits)

*4 ESA_HV_SV_SET + BC(2nd:HV Control Data 8bits)

*5 ISA_HV_SV_ SET + BC(2nd:HV Control Data 8bits)

Command	B0	B1	B2	B3	B4	B5	B6	B7	
	ESA, ISA, and XUV HV SCAN Level Set								
PAX HV SCAN SET (2 byte command)	XUV HV SCAN L SET								*1
	0	0	0	0	0	0	0	1	1st
	HV SCAN LOW LEVEL (8bit)								2nd
	XUV HV SCAN H SET								*2
	1	0	0	0	0	0	0	1	1st
	HV SCAN HIGH LEVEL (8bit)								2nd
	ISA HV SCAN L SET								*3
	0	0	0	0	0	1	0	0	1st
	HV SCAN LOW LEVEL (8 bit)								2nd
	ISA HV SCAN H SET								*4
	1	0	0	0	0	1	0	0	1st
	HV SCAN HIGH LEVEL (8bit)								2nd
	ESA HV SCAN L SET								*5
	0	0	0	1	0	0	0	0	1st
	HV SCAN LOW LEVEL (8bit)								2nd
	ESA HV SCAN H SET								*6
	1	0	1	0	0	0	0	0	1st
	HV SCAN HIGH LEVEL (8bit)								2nd

*1 ESA_HV_SCAN_L_SET + BC(2nd:HV SCAN LOW Data 8bits)

*2 ESA_HV_SCAN_H_SET + BC(2nd:HV SCAN HIGH Data 8bits)

*3 ISA_HV_SCAN_L_SET + BC(2nd:HV SCAN LOW Data 8bits)

*4 ISA_HV_SCAN_H_SET + BC(2nd:HV SCAN HIGH Data 8bits)

*5 XUV_HV_SCAN_L_SET + BC(2nd:HV SCAN LOW Data 8bits)

*6 XUV_HV_SCAN_H_SET + BC(2nd:HV SCAN HIGH Data 8bits)

Command	B0	B1	B2	B3	B4	B5	B6	B7	
	ESA Control Mode Set								
ESA CNT SET	Cal	Mode	Guard	Not Used					
	Cal :1 = Cal on 0 = Cal off								
	Mode: 1 = PHA 0 = Position Detective								
	Guard: 1=Guard Pulse (ESA/ISA) Enable 0=Disable								

Command	B0	B1	B2	B3	B4	B5	B6	B7	
	ISA Control Mode Set								
ISA CNT SET	Cal	Mode	Guard	Not Used					
	Cal : = Cal on 0 = Cal off								
	Mode: 1 = PHA 0 = Position Detective								
	Guard: 1=Guard Pulse (ESA/ISA) Enable 0=Disable								

Command	B0	B1	B2	B3	B4	B5	B6	B7	
	H32 Start Address Set								
H32 ST ADRS SET	Address Data (32 bits)								

Command	B0	B1	B2	B3	B4	B5	B6	B7	
	Select XUV FOV								
XUV FOV SET	Not Used		Guard	Not Used			Control Data		
	Control Data 2bits								
	Guard: 1=Guard Pulse (XUV) Enable 0=Disable								

Command	B0	B1	B2	B3	B4	B5	B6	B7	
	ACTIVATE PSA SUB SYSTEM								
PSA ACTIVATE	PAX ACTIVATE MODE (4bit)				EIS ACTIVATE MODE (4bit)				
	FF : ACTIVATE ENABLE EE : ACTIVATE RESET								
	00 : ACTIVATE HV 01 : ACTIVATE ALL								
	D* : ACTIVATE PAX *D : ACTIVATE EIS								

Command	B0	B1	B2	B3	B4	B5	B6	B7	
	SHUTDOWN PSA SUB SYSTEM								
PSA SHUTDOWN	SHUTDOWN MODE								
	FF : SHUTDOWN ENABLE EE : SHUTDOWN RESET								
	00 : SHUTDOWN HV 01 : SHUTDOWN ALL (1minute)								
	02 : SHUTDOWN ALL (4 seconds)								

2.1.6.2 Telemetry Items

2.1.6.2.1 Status Data

PIM ADRS	S/S	Bit	ITEMS	STATUS	
(Hex)	NAME			1	0
8000	PSA1 (W108)	B0	PSA_ECC _2BITS_ERR	ACT	NON
		B1	PSA_ECC _1BIT_ERR	ACT	NON
		B2	PSA_ECC_ENA/DIS	ENA	DIS
		B3	PSA_HTR_ENA/DIS	ENA	DIS
		B4	PSA_WDT_ERR	ACT	NON
		B5	PSA_WDT_ENA/DIS	ENA	DIS
		B6	PSA_CPU_RUN/RST	RUN	RST
		B7	PSA_CPU_ON/OFF	ON	OFF
F800	PSA2 (W109)	B0	EIS_ON/OFF	ON	OFF
		B1	EIS_SSD_ENA/DIS	ENA	DIS
		B2	EIS_MCP_ENA/DIS	ENA	DIS
		B3	EIS_SSD_ON/OFF	ON	OFF
		B4	EIS_MCP_ON/OFF	ON	OFF
		B5	ADD_ONE_ENA/DIS	ENA	DIS
		B6	ANTI_ENA/DIS	ENA	DIS
		B7	EIS_CAL_ON/OFF	ON	OFF
F801	PSA3 (W110)	B0	PAX_ON/OFF	ON	OFF
		B1	H32_RUN/RST	H32 RUN	H32 RST
		B2	H32_RUN/HLT	H32 RUN	H32 HALT
		B3	H32_ENA/FLT	H32 BUS ENA	H32 BUS FLOAT
		B4	H32_ECC_1BIT_ERR	ACT	NON
		B5	H32_ECC_2BITS_ERR	ACT	NON
		B6	SF_ENA/DIS	ENA	DIS
		B7	H32_ON/OFF	ON	OFF
F802	PSA4 (W111)	B0	ESA_MCP_ENA/DIS	ENA	DIS
		B1	ESA_MCP_ON/OFF	ON	OFF
		B2	ESA_SV_ENA/DIS	ENA	DIS
		B3	ESA_SV_ON/OFF	ON	OFF
		B4	ISA_MCP_ENA/DIS	ENA	DIS

		B5	ISA_MCP_ON/OFF	ON	OFF
		B6	ISA_SV_ENA/DIS	ENA	DIS
		B7	ISA_SV_ON/OFF	ON	OFF
F803	PSA5 (W112)	B0	XUV_MCP_ENA/DIS	ENA	DIS
		B1	XUV_MCP_ON/OFF	ON	OFF
		B2	ESA_CAL_ON/OFF	ON	OFF
		B3	ESA_MODE_PHA/PD	MODE PHA	MODE PD
		B4	ISA_CAL_ON/OFF	ON	OFF
		B5	ISA_MODE_PHA/PD	MODE PHA	MODE PD
		B6	SUB_INDEX1	0	
		B7	SUB_INDEX2	0	

PIM ADRS	S/S	Bit	ITEMS	STATUS	
(Hex)	NAME			1	0
8000	PSA1 (W108)	B0	PSA_ECC _2BITS_ERR	ACT	NON
		B1	PSA_ECC _1BIT_ERR	ACT	NON
		B2	PSA_ECC_ENA/DIS	ENA	DIS
		B3	PSA_HTR_ENA/DIS	ENA	DIS
		B4	PSA_WDT_ERR	ACT	NON
		B5	PSA_WDT_ENA/DIS	ENA	DIS
		B6	PSA_CPU_RUN/RST	RUN	RST
		B7	PSA_CPU_ON/OFF	ON	OFF
F800	PSA2 (W109)	B0	EIS_TOF_TBL	——	——
		B1	EIS_EDE_TBL	——	——
		B2	EIS_MCP_SET_LBL	——	——
		B3		——	——
		B4		——	——
		B5		——	——
		B6	EIS_SSD_SET_LBL	——	——
		B7		——	——
F801	PSA3 (W110)	B0	XUV_HV_SET_LVL	——	——
		B1		——	——
		B2		——	——
		B3		——	——

		B4		—	—
		B5		—	—
		B6		—	—
		B7		—	—
F802		B0	ISA_HV_SET_LVL	—	—
		B1		—	—
		B2		—	—
	PSA4 (W111)	B3		—	—
		B4		—	—
		B5		—	—
		B6		—	—
		B7		—	—
F803		B0	XUV_FOV	—	—
		B1	XUV_FOV	—	—
		B2	MGF_CONNECT	CON	DIS
	PSA5 (W112)	B3	MGF_DATA	NML	ERR
		B4	ESA_ISA_GD	ENA	DIS
		B5	ESA_ISA_PC	ENA	DIS
		B6	SUB_INDEX1	0	
		B7	SUB_INDEX2	1	

PIM ADRS	S/S	Bit	ITEMS	STATUS	
(Hex)	NAME			1	0
8000		B0	PSA ECC _2BITS_ERR	ACT	NON
		B1	PSA ECC _1BIT_ERR	ACT	NON
		B2	PSA ECC_ENA/DIS	ENA	DIS
	PSA1 (W108)	B3	PSA HTR_ENA/DIS	ENA	DIS
		B4	PSA WDT_ERR	ACT	NON
		B5	PSA WDT_ENA/DIS	ENA	DIS
		B6	PSA CPU_RUN/RST	RUN	RST
		B7	PSA CPU_ON/OFF	ON	OFF
F800		B0	EIS_INT_TIME	—	—
		B1		—	—
		B2		—	—

	PSA2 (W109)	B3		—	—
		B4		—	—
		B5		—	—
		B6		—	—
		B7	EIS_COM_SUC/FAL	SUC	FAL
F801		B0	ACTIVATE_ENA/DIS	ENA	DIS
		B1	SHUTDOWN_ENA/DIS	ENA	DIS
		B2	EIS_MODE	—	—
	PSA3 (W110)	B3		—	—
		B4		—	—
		B5		—	—
		B6		—	—
		B7		—	—
F802		B0	ESA_HV_SET_LVL	—	—
		B1		—	—
		B2		—	—
	PSA4 (W111)	B3		—	—
		B4		—	—
		B5		—	—
		B6		—	—
		B7		—	—
F803		B0	ESA_SV_TBL	—	—
		B1	ESA_SV_TBL	—	—
		B2	ISA_SV_TBL	—	—
	PSA5 (W112)	B3	ISA_SV_TBL	—	—
		B4	H32_STATUS	NML	FUL
		B5	XUV_GD	ENA	DIS
		B6	SUB_INDEX1	1	
		B7	SUB_INDEX2	0	

2.1.6.2.2 HK Status

Word	Address	Symbol	ITEM	UNIT	Min	Max
341	8010	PSA-E-T	PSA-E TEMPERATURE (-49.26+0.4681X)	℃	-50	+70
342	8011	ESA-S-T	ESA-S TEMPERATURE (-49.60+0.4655X)	℃	-50	+70
343	8012	ISA-S-T	ISA-S TEMPERATURE (-49.14+0.4655X)	℃	-50	+70
344	8013	XUV-S-T	XUV-S TEMPERATURE (-48.94+0.4694X)	℃	-50	+70
345	8014	XUV-MCP-T	XUV MCP TEMPERATURE (-48.94+0.4694X)	℃	-50	+70
346	8015	SV-INT-MON	SV VOLTAGE MONITOR (39.773X)	V	0	+10000
347	8016	ESA-MESH	ESA MESH VOLTAGE (-0.0741X)	V	+1	-15
348	8017	ESA-HV-OUT	ESA MCP OUT HV (20.115X)	V	0	+5000
349	8018	ISA-HV	ISA MCP IN HV (20.115X)	V	-5000	0
350	8019	XUV-HV	XUV MCP IN HV (20.231X)	V	-5000	0
351	801A	EIS-S-T	EIS-S TEMPERATURE (-50+0.471X)	℃	-50	+70
352	801B	EIS+5V	EIS +5V POWER SUPPLY (0.0392X)	V	-1	+10
353	801C	EIS+12V	EIS+12V POWER SUPPLY (0.0588X)	V	-1	+15
354	801D	EIS-12V	EIS-12V POWER SUPPLY (-0.0588X)	V	-15	+1
355	801E	EIS-MCP	EIS MCP HV (-0.0196X)	V	0	+5000
356	801F	EIS-SSD	EIS SSD HV (1.961X)	V	0	+500

2.1.6.2.3 Mision Packet

PAX

Mode 00 (Standatd Mode 0) Mode 40 (XUV Mode 0) High Edit Rate[1)]

Mode 01 (Standard Mode 1) Mode 41 (XUV Mode 1) High Edit Rate

Byte	Content	Comments
1 9	PAX common header	Byte 1: 01 (PAX ID) Byte 2: PAX mode ID Byte 3: Format Byte 4: Edit Rate Byte 5: Solar Wind Map & XUV Program Byte 6: PAX Status Byte 7: ISA Solar Wind data rate Byte 8: PAX Data Mode 1 Byte 9: PAX Data Mode 2
10	ISA 3-D velocity moment	12 bits data, 0-3 data sets / packet **NVT mode**[3)] (Solar Wind sector, Other sector) N:2elements NVx:2elements NVy:2elements NVz:2elements Pxx:2elements Pyy:2elements Pzz:2elements Pxy:2elements Pyz:2elements Pzx:2elements **NV mode**[3)] (6 sector) N:6elements NVx:6elements NVy:6elements NVz:6elements
     428 (304)	ISA/ESA 3-D count rate data (compressed)	ISA 8 : polar angle (16bits) 16 : azimuth angle 32 : energy steps + Solar Wind Data[4)] ESA 8 : polar angle (16bits) 16 : azimuth angle 32 : energy steps
429 (305) 432	XUV data	Count Data

() : XUV Mode (Mode 40 , Mode 41)

Mode 02 (Standatd Mode 2) Mode 42 (XUV Mode 2) High Edit Rate
Mode 03 (Standard Mode 3) Mode 43 (XUV Mode 3) High Edit Rate

Byte	Content	Comments
1 9	PAX common header	See Mode 00 High Edit Rate
10	ISA 3-D velocity moment	See Mode 00 High Edit Rate
     428 (304)	ISA 3-D count rate data (compressed) ESA 2-D count rate data (compressed)	ISA 8 : polar angle (16bits) 16 : azimuth angle 32 : energy steps + Solar Wind Data ESA 18 : pitch angle (16bits) 32 : energy steps
429 (305) 432	XUV data	Count Data

() : XUV Mode (Mode 42, Mode 43)

Mode 00 (Standard Mode 0) Mode 40 (XUV Mode 0) Low Edit Rate[2)]
Mode 02 (Standard Mode 1) Mode 42 (XUV Mode 2) Low Edit Rate

Byte	Content	Comments
1 9	PAX common header	See Mode 00 High Edit Rate
10	ISA 3-D velocity moment	See Mode 00 High Edit Rate
	ESA 2-D count rate data	8 : pitch angle 16 : energy
  428 (304)	ISA 3-D count rate data (compressed)	4 : polar angle 8 : azimuth angle 16: energy + Solar Wind Data
429 (305) 432	XUV data	Count Data

() : XUV Mode (Mode 40, Mode 42)

Mode 01 (Standard Mode 1) Mode 41 (XUV Mode 1) Low Edit Rate
Mode 03 (Standard Mode 3) Mode 43 (XUV Mode 3) Low Edit Rate

Byte	Content	Comments
1 9	PAX common header	See Mode 00 High Edit Rate
10	ISA 3-D velocity moment	See Mode 00 High Edit Rate
	ESA 2-D count rate data	8 : pitch angle 16 : energy
428 (304)	ISA 3-D count rate data (compressed)	6 : direction 32: energy + Solar Wind Data
429 (305) 432	XUV data	Count Data

() : XUV Mode (Mode 41, Mode 43)

Mode 60 (Earth Observation Mode)

Byte	Content	Comments
1 9	PAX common header	See Mode 00 High Edit Rate
33 432	XUV data	Count Data

1) High Edit Rate : 64kbps, 32kbps, 16kbps
2) Low Edit Rate : 8kbps, 4kbps, 2kbps, 1kbps, 512bps, 256bps, 128bps, 64bps
3) NVT mode and NV mode can be selected by PAX CNT SET command
4) solar wind direction is determined by Solar Wind Map Table

EIS

Real Time Data Packet Telemetry			
Byte	Bit	Contents	Comments
1	0	Quick Look Reference Flag	Data for Quick Look (for NEC Use)
	1	System Reserve	
	2	Even(0) or Odd(1)	
	3	PSD shutdown Enable(1) or Disable(0)	
	4	PSD Restart Enable(1) or Disable(0)	
	5	Compressed(1) or Real(0)	
	6-7	Packet ID (Identify PAX and EIS)	
2	0-3	Sector Counter (Get from I/O)	Status Data (Bilevel Data)
	4	Command Execute Flag (Set Flag on Success)	
	5	E-DE Detector Change (1-A ,0-B)	
	6	Emergency Flag (Set Flag on Emergency)	
	7	Mode Change Flag (Set Flag on Mode Change)	
3	0-2	Packet ID	Status Data (Bilevel Data)
	3	ECC 1Bit Error (Set Flag on Error)	
	4	Calibration (1-ON , 0-OFF)	
	5	SCI. Data Complete (1-Yes , 0-No)	
	6	Auto Int Mode(1) or Table Dump Mode(0)	
	7	Integration Fix Flag	
4	0-7	MCP-HV (Real Voltage)	
5	0	Detector Fix of Auto	HV Voltage of SSD
	1	Which Detector is Fixed (1-A ,0-B)	
	2-5	Telemetry Bitrate	
	6-7	SSD-HV (Real Voltage)	
6	0-1	SSD-HV (Set Voltage)	Discri. Level for SSD
	2-3	SSD3	
	4-5	SSD2	
	6-7	SSD1	
7	0-7	TI (21-14) Bits	TI Data Preserve Register
8	0-7	TI (13-6) Bits	
9	0-3	TI (5-2) Bits	
	4-5	4 Times Integration Element Flag	
	6-7	(8-9) MSB of INT_TIM	

10	0-7	Integrate Time	
11	0-5	(0-5) of Shift Bits No.1	
	6	Shiftbit Sequence No. (MSB)	
	7	Shiftbit Sequence No. (LSB)	
12	0	Block Full	
	1-5	Observation Mode Number	Symbol of Observ. Mode on Status REG.
	6	TOF Reference Table Refresh Flag	Reference Table Refresh
	7	EDE Reference Table Refresh Flag	
13-17	0-7	Area for Command Feedback	1 Bit Error or NMI is happened
18	0-7	Number of ECC 1Bit Error	
19	0-1	(0-1) of Shift Bits No.5	Shift Bit for T-E DE-E Ref. Plane
	2-7	Shift Bits No.2	
20	0-1	(2-3) of Shift Bits No.5	
	2-7	Shift Bits No.3	
21	0-1	(4-5) of Shift Bits No.5	
	2-7	Shift Bits No.4	
22	0	Total Count Flag	
	1	Shiftbit Sequence No. (HSB)	
	2-3	Reserve	
	4	Dump Data Complete Flag	
	5-7	Format Number	Telemetry Format
23	0-6	Packet Counter	Set on Completing Assembling Data
24	0-7	MCP-HV (Set Voltage)	
25-432	0-7	EIS Data	EIS Science Data

Compressed Data Packet Telemetry			
Byte	Bit	Contents	Comments
1	0	Quick Look Reference Flag	Data for Quick Look (for NEC Use)
	1	System Reserve	
	2	Even(0) or Odd(1)	
	3	PSD shutdown Enable(1) or Disable(0)	
	4	PSD Restart Enable(1) or Disable(0)	
	5	Compressed(1) or Real(0)	
	6-7	Packet ID (Identify PAX and EIS)	

2	0-3	Sector Counter (Get from I/O)	Status Data (Bilevel Data)
	4	Command Execute Flag (Set Flag on Success)	
	5	E-DE Detector Change (1-A ,0-B)	
	6	Emergency Flag (Set Flag on Emergency)	
	7	Mode Change Flag (Set Flag on Mode Change)	
3	0-2	Packet ID	Status Data (Bilevel Data)
	3	ECC 1Bit Error (Set Flag on Error)	
	4	Calibration (1-ON , 0-OFF)	
	5	SCI. Data Complete (1-Yes , 0-No)	
	6	Auto Int Mode(1) or Table Dump Mode(0)	
	7	Integration Fix Flag	
4	0-7	(21-14) Bits of TI	TI Data Preserve Register
5	0-7	(13-6) Bits of TI	
6	0-3	(5-2) Bits of TI	
	4-7	Telemetry Bitrate	
7-11	0-7	Area for Command Feedback	
12	0-7	Number of ECC 1Bit Error	
13	0-4	Observation Mode Number	
	5-7	Format Number	Telemetry Format
14	0-7	Packet Counter	Packet Counter
15-432	0-7	EIS Compressed Data	EIS Science Data

2.1.7 Particular Cares Required

As noted in Section 2.1.3, all of the PSA instruments have critical elements (MCP and HVPS) which should be taken particular cares in handling and operation. The environmental and handling requirements are listed below:

1) Surrounding humidity : < 50%
2) Sensors to be constantly purged with high-purity N_2 gas purge through the sensor covers
3) Strict control of hydrocarbon contamination near the sensor units
4) Clean gloves to be used

2.1.8 Appendix

2.1.8.1 Intensity of the scattered EUV light

The intensity of the scattered light I_p, is proportional to the column density, i.e., density n integrated along the line of sight (LOS), the intensity of the solar radiation F_λ with wavelength λ, and the cross section of the resonance scattering σ as;

$$I_p = \int_{LOS} n \cdot g = \int_{LOS} n \cdot F_\lambda \cdot \sigma$$

The coefficient $g = F_\lambda \cdot \sigma$ is so called g-factor and depends on the wavelength. The g-factors of He I and He II emissions at the Mars orbit is given in Table 2.2.8.1-1.

species	emission	Wavelength(Å)	σ (cm^2)	g($s^{-1}atom^{-1}$)
He^+	He II	303.78	9.32×10^{-14}	7.91×10^{-6}
He	He I	584.33	1.19×10^{-13}	4.90×10^{-6}

Table 2.1.8.1-1

2.1.8.2 EUV intensity from the Martian atmosphere and ionosphere

Assuming a barometric density profile where the scale height is 400km, the neutral Helium density of $10^6 cm^{-3}$ at the Martian surface, and the Helium ion density of $70cm^{-3}$ at 500km altitude I_p corresponding to the He I and He II emissions are estimated. I_p is shown versus the closest distance between the center of the Mars to the line of sight (LOS) of the scanner (in Rm: Mars radii) in Figure 2.1.8.2-1.

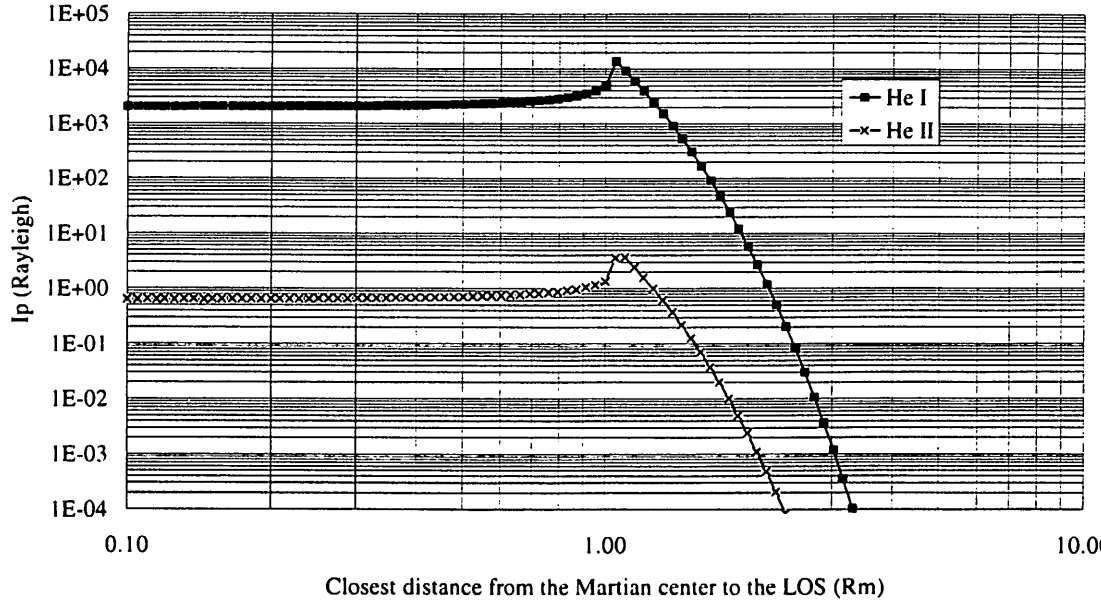

Figure 2.1.8.2-1

The expected photon count N_p, is given by the following equations.

$$N_p = k \cdot I_p$$

$$k = \frac{\eta S \delta^2}{4}$$

where η is the efficiency of the photon detection of the scanner, S is the detection area of the scanner, δ is the view angle of the EUV scanner. In these equations k is dependent on the sensor design and I_p depends on the source region of the scattered EUV emissions. The k factor of the XUV is 1.4×10^{-5} and 5.5×10^{-5} when the view angle is 1.6° and 3.2°, respectively. With these numbers we can calculate the photon count of He I (Figure 2.1.8.2-2) and He II emissions (Figure 2.1.8.2-3) from the Martian atmosphere and ionosphere. The spatial resolution is fixed to be 0.2,Rm, so the spacecraft position is 10Rm and 5Rm from the center of the Mars with view angle of 1.6° and 3.2° , respectively.

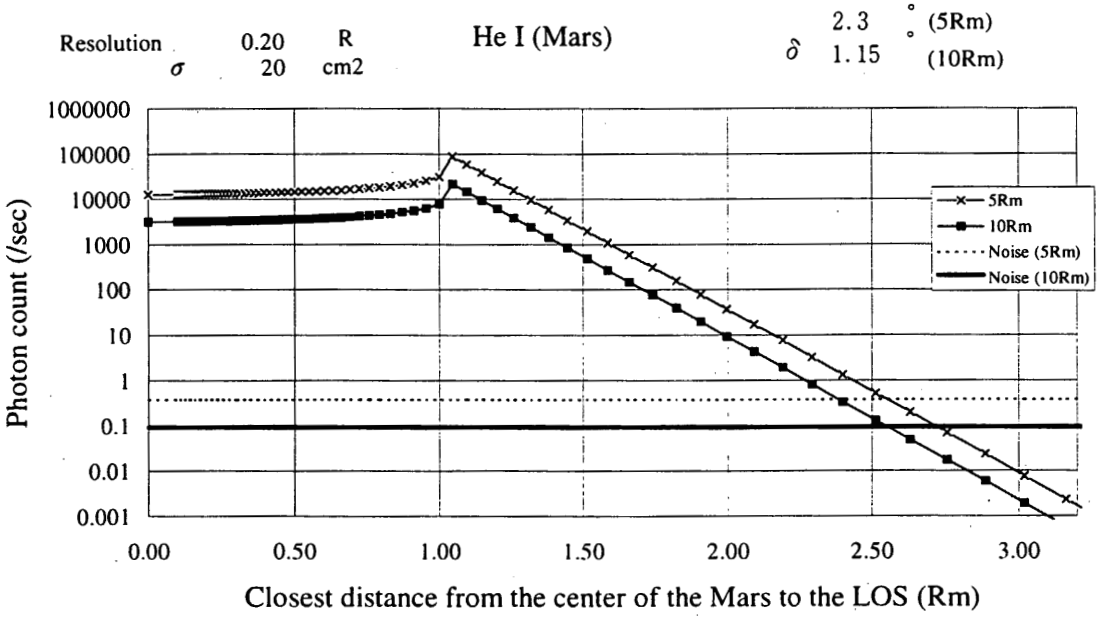

Figure 2.1.8.2-2

Noise count is calculated assuming that MCP dark count rate is 2cps/cm^2. For He I emission, the photon count exceeds noise count up to 2.5Rm from the center of the Mars in both cases of 1.6° and 3.2° field of views. As the number density of Helium ion is less than that of the neutral Helium, the range where the photon count of He II emission exceed the noise count is smaller than that of He I emission, i.e., up to 1.5Rm.

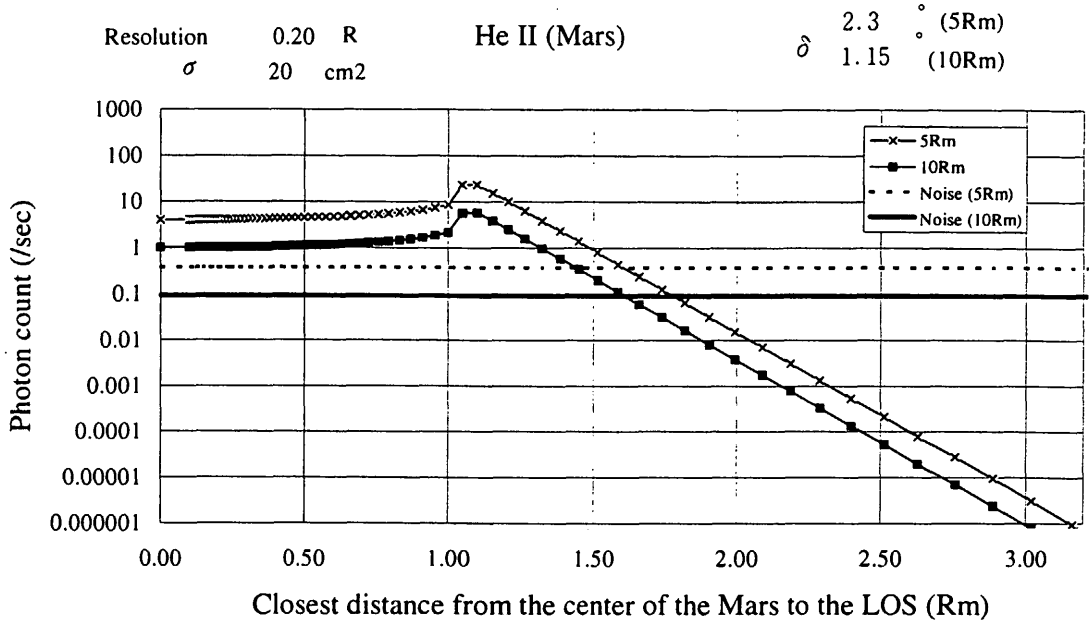

Figure 2.1.8.2-3

2.1.8.3 EUV intensity from the magnetosphere of the Earth

We have an opportunity to observe the Earth's plasmasphere and magnetotail from the parking orbit around the Earth. It is expected that He II emission exceed the noise count of the order of 2 in the plasmasphere (calculation is not shown here).

For the magnetotail, let us assume the He^+ density to be 1% of the plasma density in the magnetotail. In the case when we observe the magnetotail region from the dawn or dusk side, a typical He^+ density in the tail region is $0.01cm^{-3}$ and the column length is about 20Re. With these values, the photon count will be 0.03cps. When Planet-B is at the midnight sector and the observation is along the magnetotail, the column length will be much longer, more than 200Re. In this case we expect Np = 0.3cps. Noise count level is expected to be of the order of 0.05 in these cases. Thus, we can conclude that we will have an opportunity to detect He II emissions in the Earth's magnetotail when the observation is done along the magnetotail.

2.2 Plasma Wave Analyzer (PWA)

PWS Principal Investigator, Co-Investigators and Manufacturer

Principal Investigator	T. Ono	Tohoku Univ.
PWS-P (Plasma) Co-Investigators		
	H. Oya	Tohoku Univ.
	A. Morioka	Tohoku Univ.
	K. Marubashi	CRL
	H. Miyaoka	NIPR
	T. Obara	CRL
	H. Iizima	Tohoku Univ.
	H. Misawa	Tohoku Univ.
	K. Kobayashi	Toyama Prefectual Univ.
	A. Kumamoto	Tohoku Univ.
PWS-A (Altimeter) Co-Investigators		
	H. Oya	Tohoku Univ.
	T. Okada	ISAS
PWS Manufacturer	Meisei Electric Co., Ltd.	

LFA Principal Investigator, Co-Investigators, and Manufacturer

Principal Investigator	H. Matsumoto	RASC, Kyoto Univ.
Consultant	I. Kimura	Osaka Institute of Technology
Co-Investigators	T. Okada	Toyama Prefectural Univ.
	I. Nagano	Kanazawa Univ.
	K. Hashimoto	RASC, Kyoto Univ.
	M. Tsutsui	Kyoto Sangyo Univ.
	S. Yagitani	Kanazawa Univ.
	Y. Kasaba	Toyama Prefectural Univ.
	K. Tsuruda	ISAS
	H. Hayakawa	ISAS
	A. Matsuoka	ISAS
	S. Watanabe	CRL
	H. Ueda	Chiba Univ.
	Y. Kasahara	Kyoto Univ.
	Y. Omura	RASC, Kyoto Univ.
	K. Ishisaka	Toyama Prefectural Univ.
	T. Imachi	Kanazawa Univ.
	Y. Tateno	Toyama Prefectural Univ.
LFA Manufacturer	Meisei Electric Co., Ltd.	

WANT Investigators and Manufacturers

	M. Hinada	ISAS
	Y. Morita	ISAS
WANT Manufacturer	Hitachi, Ltd.,	Meisei Electric Co., Ltd.

2.2.1 Scientific Objectives

2.2.1.1 PWS (Plasma Waves and Sounder Experiment)

Investigation of both the microscopic plasma processes and its relation to the macroscopic distribution and dynamics of Martian plasmasphere and ionosphere are essential to clarify the interaction process between the solar wind and the non-magnetized planet Mars. The Plasma Waves and Sounder Experiment (PWS) has the role to measure the microscopic plasma wave phenomena by using the high sensitive wave detector and the macroscopic plasma structure by using the plasma sounder, in the frequency range from 20 kHz to 10 MHz. The scientific objectives of the PWS are summarized below.

1. Evaluate the contribution of the equivalent collision and equivalent viscosity terms to the formation of the boundary layers which should be generated as the result of the wave-particle interaction processes in and near the Martian plasmasphere.
2. Study the role of plasma waves in the mass-loading process where the solar wind strips off the atmosphere of Mars.
3. Study the acceleration and thermalization process of the Martian ionospheric plasma through the electromagnetic disturbances which are caused by the solar wind.
4. Detect the planetary radio waves which will be generated near the planetopause.
5. Determine the solar wind parameters from the plasma oscillation and the electron acoustic waves in the solar wind.
6. Observe the vertical plasma density profile to study the global structure and its dynamics of the Martian ionosphere.
7. Measure the global plasma motion in the Martian plasmasphere through the Doppler effect of the artificially stimulated plasma resonance by plasma sounder.
8. Detect the irregularities of the ionospheric plasma through the radio scattering feature obtained from the sounder echo characteristics.
9. Measure the spacecraft altitude from the solid surface of the planet to study the Martian topography and surface composition, by means of the accurate detection of the echo time of the transmitted RF pulses.

2.2.1.2 LFA (Low Frequency wave Analyzer)

Plasma waves provide key information on the macroscopic and microscopic phenomena associated with the interactions between the solar wind and the Martian atmosphere. The Low Frequency wave Analyzer (LFA) has the role to measure plasma waves, electric fields, and the spacecraft potential, in order to provide spectra and waveforms of plasma waves in the frequency range from dc to 32 kHz and densities and temperatures of electrons in the vicinity of Mars. The scientific objectives of the LFA are summarized as follows:

1. Macroscopic plasma environment from the solar wind to the ionosphere and their boundaries
   a. Plasma parameters in the space surrounding Mars by the measurements of the plasma waves and the spacecraft potential
   b. Structures of the bow shock and the planetopause, and the affections from the solar wind ram pressure and the solar activities
   c. Remote sensing of the global plasma variations by electromagnetic wave detection such as the $2f_p$ radiation and the nonthermal continuum radiation
   d. Amount of the cold plasma outflow from the ionosphere
2. Microscopic plasma phenomena induced by the interaction between the solar wind and the Martian atmosphere
   a. Contributions of various wave-particle interactions to the mass loading process at the ionopause

b. Nonlinear plasma wave activities in the high-β environments around the bow shock and the planetopause
c. Dust-plasma interactions and the trial of dust counting in the Phobos dust torus

3. Generation and propagation mechanisms of electromagnetic waves
   a. Electromagnetic waves from the foreshock and the planetopause ($2f_p$/Continuum etc.)
   b. Electromagnetic waves from the ionosphere and the atmosphere (whistler etc.)
4. Plasma activities in the nightside ionosphere and the tail-like region
   a. Plasma structures and convection electric fields in the nightside region
   b. Plasma waves and their contributions on the particle accelerations in the auroral-like region
5. Comparison with other planets
   a. Comparison with the non-magnetized planet with dense atmosphere (ex. Venus)
   b. Comparison with the magnetized planet with dense atmosphere (ex. Earth)
   c. Comparison with the magnetized planet without atmosphere (ex. Mercury)
   d. Comparison with the non-magnetized planet without atmosphere (ex. Moon)

2.2.2 Instrument Specifications

2.2.2.1 PWA-E

The instruments related to the plasma wave observation, i.e.,

1) PWS (Plasma Waves and Sounder Experiment),
2) LFA (Low Frequency Wave Analyzer),
3) WANT (Wire Antennas), and
4) WANT PRE (Pre-amplifiers for Wire Antennas)

are combined into one system, named as PWA (Plasma Wave Analyzer), for the purpose to perform the organized operation using the onboard CPU (SI-CPU) and to reduce the weight budget. The construction and block diagram of PWA-E subsystem is shown in Figure 2.2-1 and Figure 2.2-2. The onboard software for SI-CPU of PWA is designed to control the antenna deployment, instrumental set up and operations for the observation modes, data processing, and communication with DHU (Data Handling Unit).

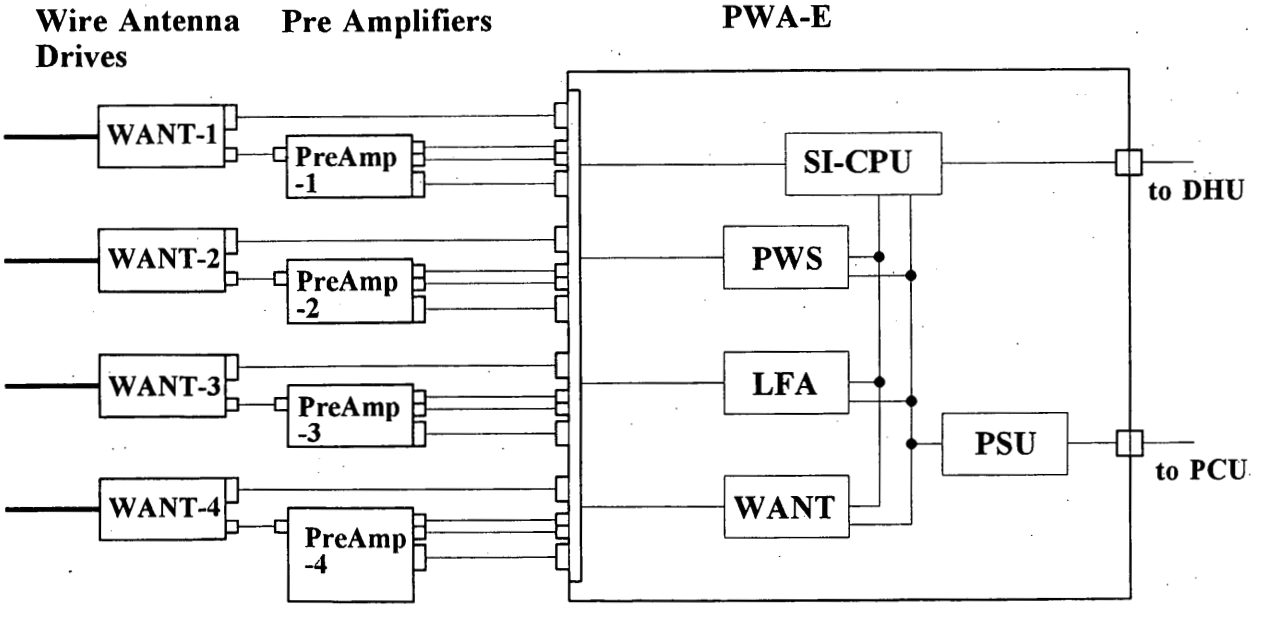

Figure 2.2-1 PWA Configuration.

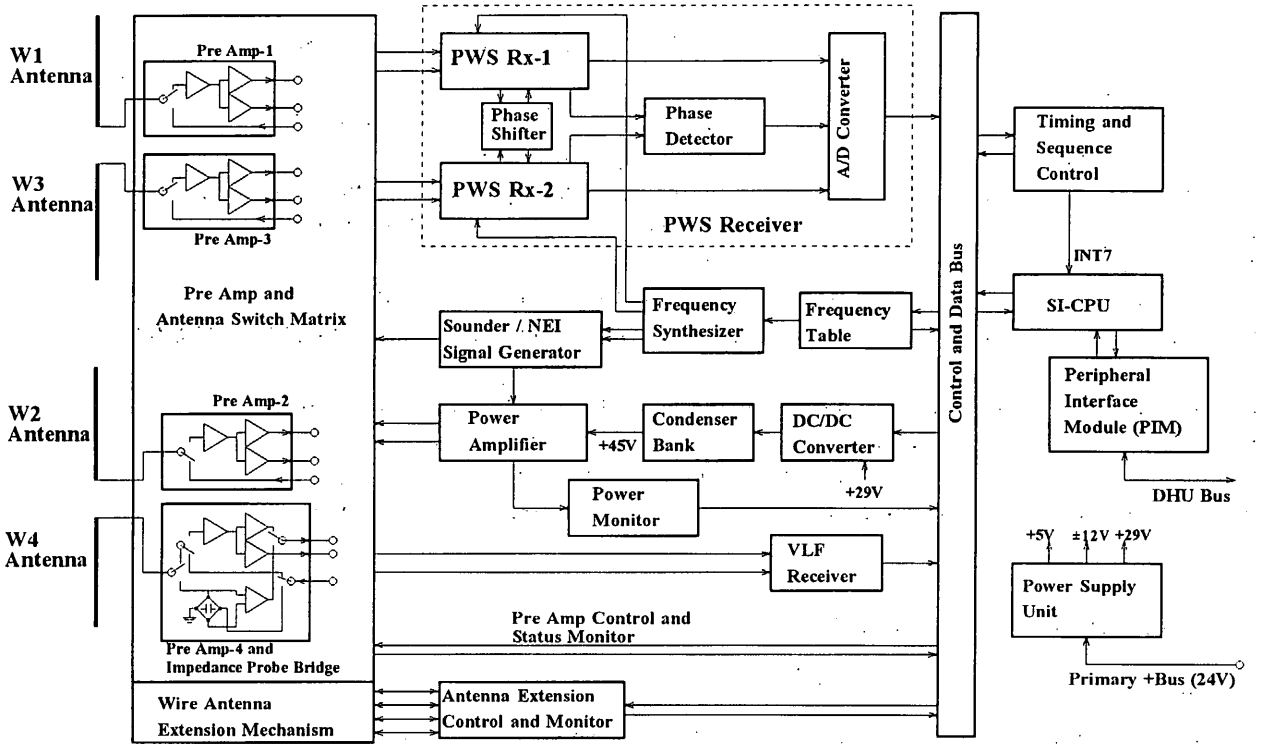

Figure 2.2-2 Block diagram of PWA system.

2.2.2.2 PWS

The PWS has three observational modes; 1) Natural Plasma Wave (NPW) mode to observe the natural plasma waves, 2) Number Density of Electron by Impedance Probe (NEI) mode to measure the in-situ electron density profile along the spacecraft trajectory using the impedance probe, 3) Stimulated Plasma Wave (SPW) mode to sound the vertical profile of the Martian ionosphere, to stimulate the local plasma resonances, and to measure the altitude of the spacecraft from the solid surface of the planet, by means of the transmission of the high power RF pulses. The observation frequencies of these modes are defined by using the frequency table which is used for the control of the direct digital synthesizer (DDS) subsystem of the PWS instrument.

The function of the PWS and block diagram of the front end system from the preamplifiers to data processor are illustrated in Figure 2.2-2 and Table 2.2-1. Four wire antenna systems (WANT) with 52 m tip to tip length which compose cross dipole antennas are used to detect the electric field of plasma waves, to transmit the RF pulses for SPW operation, and to measure the probe impedance for NEI operation.

Table 2.2-1 Function of PWS System. The observation frequencies are referring the default frequency table.

PWS	NPW	DS	2sec	28kHz - 4.7MHz
		PL	2sec	28kHz - 4.7MHz
		NEI	2sec	28kHz - 4.7MHz
	SPW	Norm	32sec	30kHz - 6.7MHz
		H-Sweep	8sec	8MHz - 9.9MHz
		ALT	250msec	8MHz - 10MHz

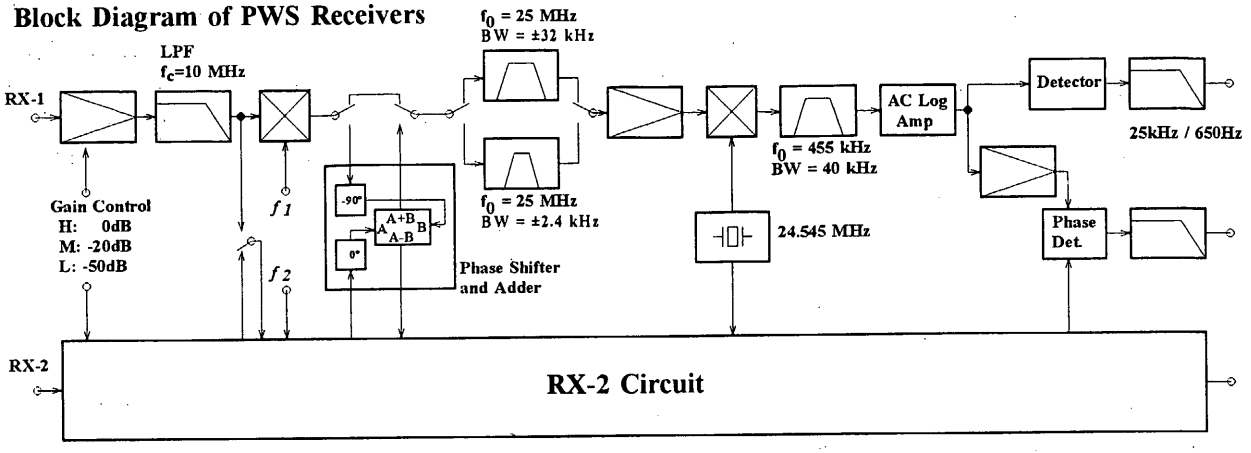

Figure 2.2-3 Block diagram of IF amplifier and phase detector.

Table 2.-2 Time resolution of NPW observations.

Data Transmission Rate (bits/sec)	bit/s	65k	32k	16k	8k	4k	2k	1k	512	256	128
PWA Packet Rate (Obs-S and Obs-P modes)	packet/s	4	2	1	1/2	1/4	1/8	1/16	1/32	1/64	1/128
PWS Data Rate											
(Packet Format-A: PWS mode)	Byte/s	1024	512	256	128	64	32	16	8	4	2
(Packet Format-B: LFA mode)	Byte/s	512	256	128	64	32	16	8	4	2	1
Time Resolution NPW and NEI Spectra in Format-A	sec	2	2	2	4	8	16	32	64	128	256

1) NPW mode

The NPW mode has two observational functions, i.e., the measurement of the dynamic spectrum of two components of the electric field, Ex and Ey (DS mode), and the measurement of the polarization-frequency spectrum of Right-hand and Left-hand components of the received waves (PL mode). The NPW consists of two sets of swept frequency spectrum analyzers which are composed of double super heterodyne receivers as shown in Figure 2.2-3. The receiving frequency is swept stepwise from 28 kHz to 4.7 MHz with 256 steps in every 2 seconds on board. The time resolution of the NPW data on the ground depends on the data transmission rate to the data edition format and edition rate of DHU varying from 65 kbps to 128 bps. The time resolution of the NPW as well as NEI mode observations are summarized in table 2.2-2 for the Obs-P mode DHU format. The dynamic range of the receiver is 80 dB which is achieved by using the AC logarithmic amplifier in the second intermediate frequency (IF) stage. The frequency spectrum analyzers have attenuators for gain control at the input stages as has been shown in Figure 2.2-3, by switching the attenuation levels with 0 dB, -20 dB and -50 dB depending on the gain control BC commands defined as gain-H, gain-MD and gain-L, respectively. The local signals for the heterodyne receiver are generated by the digital synthesizer which provides stable frequency signals. The frequency tables are provided in the SI-CPU software program for the observation modes of NPW (same with the NEI mode), SPW, SPW-H and ALT modes.

The separation of the received electric field into Right-hand and Left-hand polarized components is

performed by the separation circuit at the 1st IF stage with isolation more than 30 dB. The polarization characteristic of the plasma and radio waves detected by the PWS system is defined with respect to the configuration of the two sets of dipole antenna and receiver. As given if the Figure 2.2-4, two sets of dipole antennas are identified as X and Y antenna systems whose direction is rotated clockwise by 45 degrees from the satellite common coordinates. By using the separation circuit, the output signal from the receiver-1 (Rx-1; see Figure 2.2-2) coincides with the Right-handed component of the polarized propagating waves toward the satellite from Z direction.

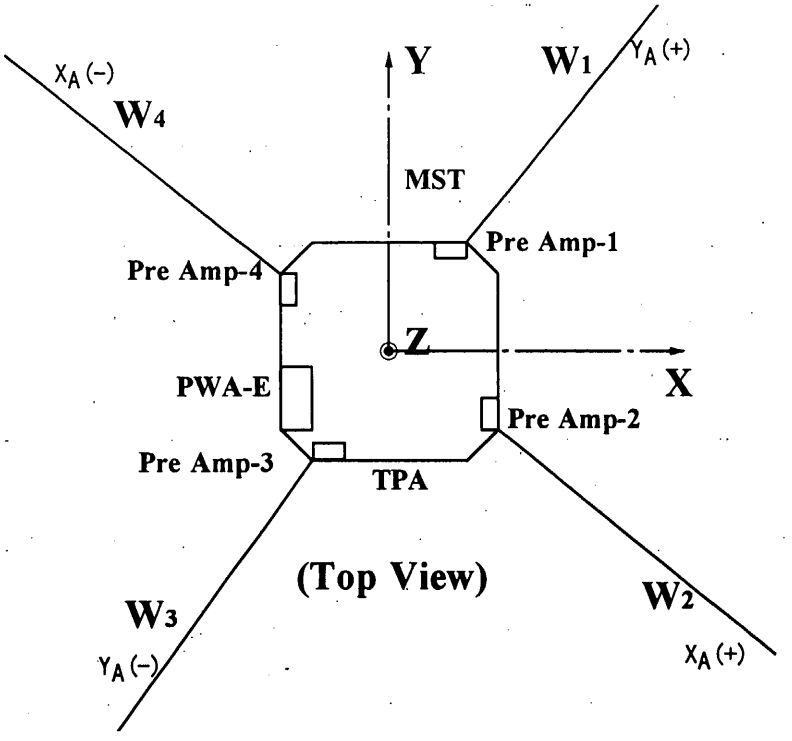

Figure 2.2-4 Definition of the wire antenna coordinate system.

2) NEI mode

The NEI mode provides the electron density using a swept frequency impedance probe which has been developed by many Japanese sounding rocket and previously launched satellites. From the measured impedance value of the probe, the plasma parameters are obtained; especially from the upper-hybrid resonance frequency, electron density is obtained with high accuracy within an error of 3 %. One of the four long wire antennas, namely W-4 is used as the probe, and the signal whose frequency is swept from 28 kHz to 4.7 MHz is fed to the probe as has been shown in Figure 2.2-2. The preamplifier detects the signal modulated by the effect of the surrounding plasma. The output level from the preamplifier, then, gives the effective capacitance value as a function of the supplied frequency of the probe.

Range of the capacitance value is 1 pF to 1000 pF. The subsystems for generation of the swept frequency signal, IF amplifier and the data processing unit are provided as the common facilities with the NPW and SPW system.

3) SPW mode

The SPW mode has three operational modes named as SPW-N (normal mode), SPW-H (high frequency sweep mode) and ALT (altimeter mode). The SPW-N mode makes vertical sounding of the plasma density profile and stimulation of the plasma waves. The power amplifier is operated to transmit RF pulses into Martian plasma. The block diagram of the SPW system is illustrated in Figure 2.2-5. The source signals for

the power amplifier are fed from the swept frequency generator (digital frequency synthesizer) whose frequency is swept from 30 kHz to 6.7 MHz during 32 sec for the Normal mode, from 8 MHz to 9.9 MHz during 2 sec for the H-sweep mode and during 250 msec for ALT mode. The signal from the swept frequency generator is amplified to 600 Watt power level through three stages of the amplifier, i.e., the pre-driver, the driver, and the main amplifier stages. Through these stages, the original continuous RF signals are modulated in a pulse form with the pulse width of 100 μsec for Normal and H-sweep mode and 300 μsec for the ALT mode. The repetition of the pulses is 125 msec.

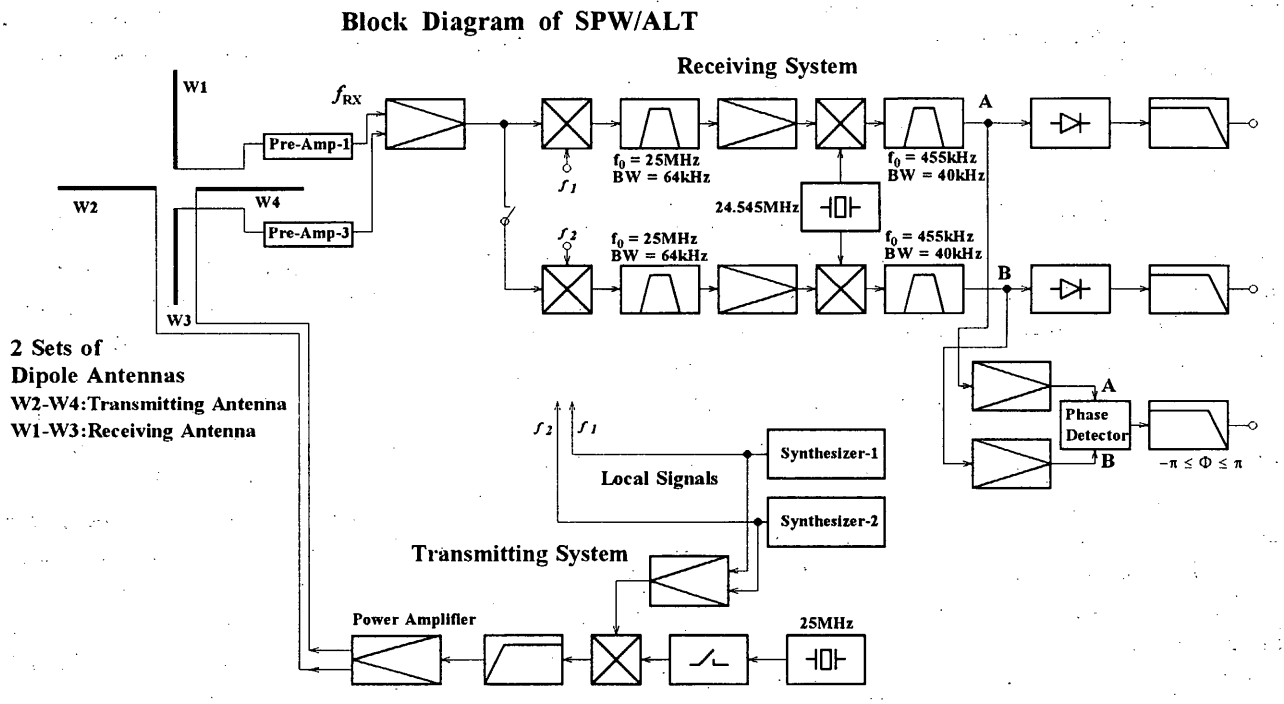

Figure 2.2-5 Block diagram of SPW and ALT mode operation.

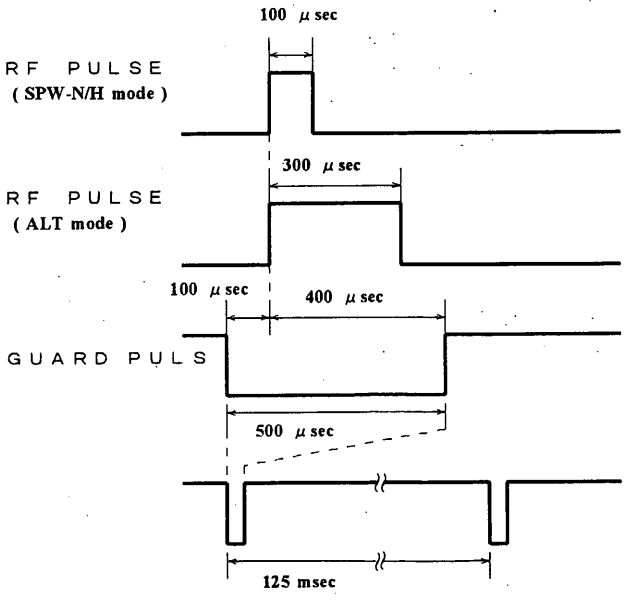

Figure 2.2-6 SPW Guard Pulse.

In the SPW operation, one set of the 52 m dipole antenna is used for the transmission of RF pulses and the other 52 m antenna is used for the reception of the reaction of the transmitted pulses including the echoes from the topside ionosphere and solid surface. The NPW subsystem is used as a receiver where gain and bandwidth are adjusted to be suitable for the reception of the echoes of the pulses, and plasma waves generated as a reaction of the transmitted RF pulses. The bandwidth of the receiver is set to be ±32 kHz so as to be suitable pulse reception. The receiver is protected from high power transmission during 500 μsec. The timing relation between the pulse transmission and protection period is given in Figure 2.2-6. This signal is distributed to other subsystems as the guard pulse which is used to protect the subsystems or make a marker on their data when subsystems suffer the disturbance at the time of the high power transmission. The received analog data after the transmission of RF pulse are converted to the digital value and converted to the compressed data by the onboard CPU.

2.2.2.3 LFA

The LFA observes electric fields in three frequency bands of the band-H (100 Hz ~ 32 kHz), -M (10 Hz ~ 1 kHz), and -L (dc ~ 40 Hz) received by electric antennas (the WANT). These signals are independently converted to spectra and waveforms by the onboard frequency analyzer (OFA) and the waveform capture (WFC) under the operation of the central processing unit (CPU) and the digital signal processor (DSP). Summaries of the system are given in Figure 2.2-7 and 2.2-8.

The system abilities are summarized in Table 2.2-3 and Figure 2.2-9. Signals are fed from the WANT through the preamplifiers. The effective length of the WANT as the dipole antenna, h_{eff}, is estimated 23 m as is half the tip-to-tip length of the real length except the shielded 2m-part. The coupling loss in the stage of the antenna and the preamplifier is about 15 dB which is determined by the antenna impedance in the space plasma (as is assumed to be 120 pF) and the input impedance of the preamplifier including the capacitance of the shielding (as is about 560 pF and 100 MΩ in parallel).

The LFA system has been expanded in her long development history. Therefore, labels indicating the band-H, -M, and -L are little different. In the commands and on the quick-look, the band-H, -M, and -L are called as OFA, WFC-M (WFC memory-mode), and WFC-D (WFC direct-mode), respectively.

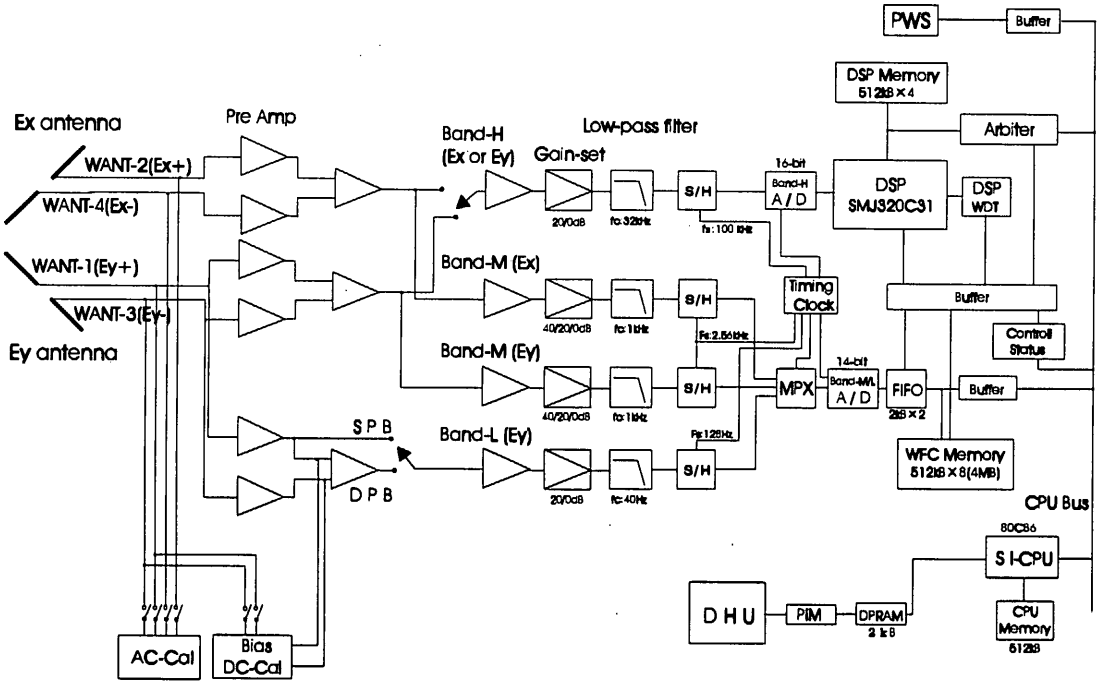

Figure 2.2-7 System Block Diagram of the LFA

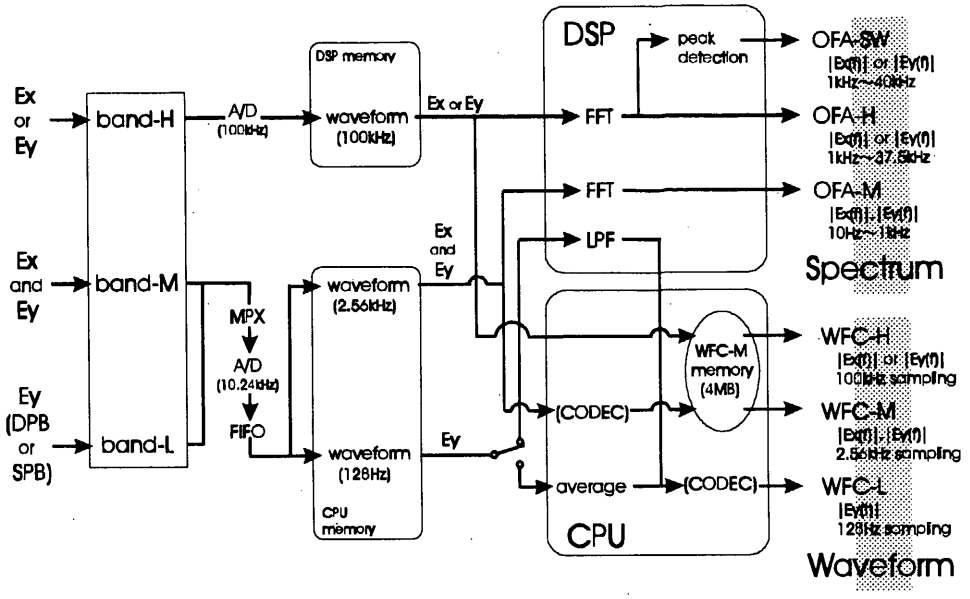

Figure 2.2-8 Data flow of the LFA

	Label	Antenna	Freq. Range	Sampling	Gain
Band-H (OFA/WFC)	OFA	Ex or Ey	100Hz ~ 32kHz	100kHz (16bit)	+0/20 dB
Band-M (OFA/WFC)	WFC-M	Ex and Ey	10Hz ~ 1kHz	2.56kHz (14bit)	+0/20/40 dB
Band-L (WFC)	WFC-D	Ey [DPB/SPB]	dc ~ 40Hz	128Hz (14bit)	+0/20 dB

Table 2.2-3 Summary of the frequency coverage of the LFA

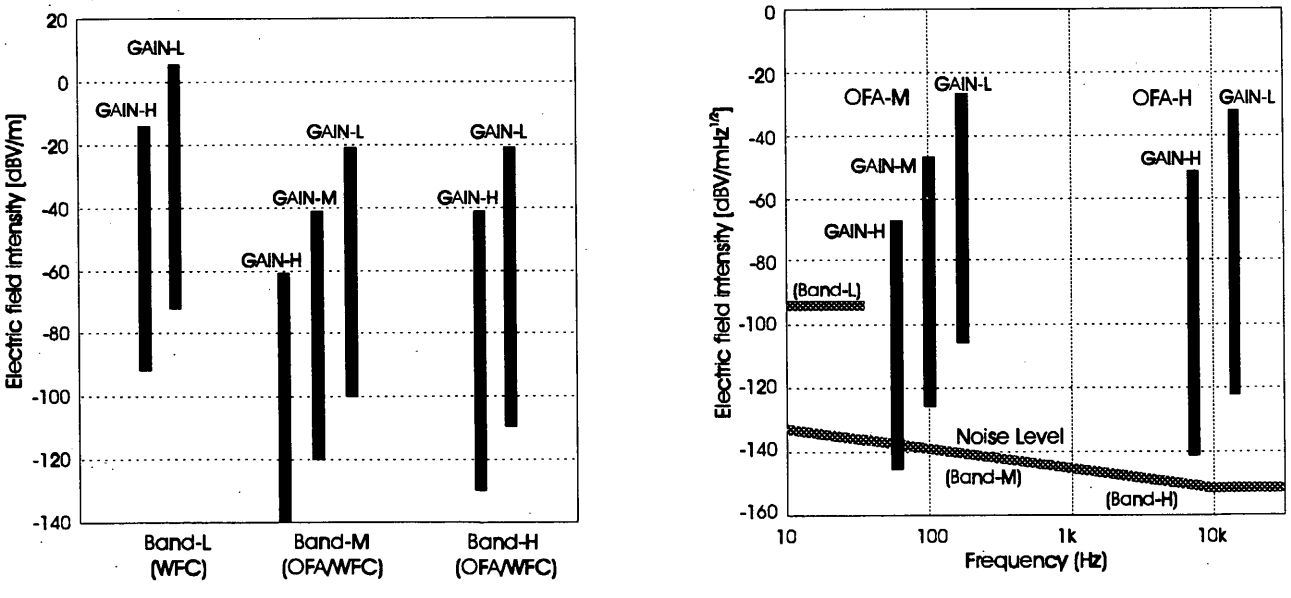

Figure 2.2-9 Expected sensitivity of the LFA

1) Frequency Coverage

The LFA covers the frequency range from dc to 32 kHz by three different frequency bands that are independently managed by preamplifiers and low-pass filters.

a. The band-H

The band-H covers the electric field component from the dipole antenna system of WANT-Ex or -Ey in the frequency range from 100 Hz to 32 kHz. The band-H receiver has a dynamic range of ~70 dB and its gain can be stepped up by 0 or 20 dB. Therefore, the effective dynamic range is reached up to ~90dB. After the rejection of the component above 32 kHz by the analog low-pass filter, the signals are sampled by the A/D converter into 16-bit string data with a sampling frequency of 100 kHz. The digitized data in the length of 10.24 msec is stored in DSP memory with 0.125-second intervals.

b. The band-M

The band-M covers the two electric field components from the dipole antenna system of WANT-Ex and -Ey in the frequency range from 10 Hz to 1 kHz. The band-M receiver has a dynamic range of ~70 dB and its gain can be stepped up by 0, 20, or 40 dB. Therefore, the effective dynamic range is reached up to ~110dB. After the rejection of the component above 1 kHz by the analog low-pass filter, the signals are sampled by the A/D converter into 14-bit string data with a sampling frequency of 2.56 kHz. The digitized data is continuously stored in the memory of CPU.

c. The band-L

The band-L covers the electric field component from the dipole or single-probe antenna system of WANT-Ey in the frequency range from dc to 40 Hz. In the dipole mode, The band-L receiver has a dynamic range of ~70 dB and its gain can be stepped up by 0 or 20 dB. Therefore, the effective dynamic range is reached up to ~90dB. On the other hand, in the single-probe mode, the band-L receiver has a dynamic range from −10 V to +10V and its gain can be stepped up by 0 or 20 dB. After the rejection of the component above 40 Hz by the analog low-pass filter, the signals are sampled by the A/D converter into 14-bit string data with a sampling frequency of 128 Hz. The digitized data is continuously stored in the memory of CPU.

d. The Automatic Gain Control (AGC)

On the orbit around Mars the wave amplitudes are abruptly changed, while the real-time operation from the Earth is impossible. In order to avoid saturation and insufficient gains, the band-H, -M, and -L have the automatic gain control (AGC) operated by the CPU. Conditions of the stepping up and down depend on wave amplitudes at specific time intervals observed in each frequency bands. These conditions are selected by commands.

2) Data analyzers

Combining the CPU (i80C86) and the DSP (SMJ320C31), the signal output of the A/D converters belonging to each bands are supplied to two different data analyzers: (a) the onboard frequency analyzer (OFA) and (b) the waveform capture (WFC). The former provides spectra in the band-H and -M, and the latter provides the waveforms in the band-H, -M, and -L, respectively.

a. The OFA

The OFA (-H and -M) provides voltage spectra of plasma waves over the frequency range in the band-H and -M, from 10 Hz to 32 kHz. The obtained spectra are used for analysis of the plasma wave characteristics and determination of the plasma parameters.

The OFA-H provides the voltage spectrum of Ex or Ey in band-H, from 100 Hz to 32 kHz obtained by the DSP using the Fast Fourier Transformation (FFT) of 1024 points (10.24 msec) with 0.125-second intervals. The OFA-M provides the voltage spectra of Ex and Ey and the phase spectrum (phase difference) in the band-M, from 10 Hz to 1kHz. The voltage spectra and the phase difference are obtained by DSP using the Fast Fourier Transformation (FFT) of 1024 points (400msec) which are continuously sampled.

The output resolutions in time and frequency of the OFA are adequately suited to data transformation rate by a command. The OFA has two output formats, the frequency-mode and the time-mode. The frequency-mode provides the data with high-frequency resolution averaged in time, while the time-mode provides the data with high-time resolution averaged in frequency. Both can simultaneously be transmitted, so that we can

simultaneously get the data with highest resolution of 0.5 sec in time and of 512 points in the frequency range. The frequency resolutions of both modes are quasi-logarithmically spaced.

The time-mode of the OFA-H can be replaced with the solar wind mode. The solar wind mode provides frequency, bandwidth, and amplitude at the narrowband peak in 1-32 kHz in order to monitor the plasma frequency and strength of the Langmuir wave in the space around Mars at fine time resolution. This mode becomes effective when the data transmission rate is below 8 kbps.

If the DSP breaks, the LFA can not provide the OFA data. At such the emergent case, the LFA can enters the emergency mode, and the OFA data in the data packets are replaced with the WFC-M data.

b. The WFC

The WFC (-H, -M, and -L) provides the waveforms of plasma waves over the frequency range in band-H, -M, and –L, from dc to 32 kHz. The obtained waveforms are used for a detailed analysis of the plasma wave characteristics such as the determination of the wave normal direction and polarization.

The WFC-H captures the waveform obtained from the dipole sensors of WANT-Ex or -Ey over the frequency range from 100 Hz to 32 kHz stored in the DSP memory. The waveform is for 10.24 msec and sampled with a sampling frequency of 100 kHz coded into 16-bit string data. Data is stored in the WFC-H memory with the capacity of 256 kB, so that 128 samples can be recorded. Sampling interval can be changed by a command. In each intervals, the WFC-H stores a waveform triggered at a constant time interval, above a specific wave amplitude, or at a maximum wave amplitude. The triggering condition can also be selected by a command. The DSP also uses the waveform data at the FFT analysis, so that the simultaneous spectrum is provided by the OFA-H.

The WFC-M captures simultaneous waveforms obtained from the dipole sensors of WANT-Ex and -Ey over the frequency range from 10 Hz to 1 kHz. The waveforms are sampled with a sampling frequency of 2.56 kHz for each channel coded into 14-bit string data, which can be compressed by the μ-CODEC algorithm into 8-bit string data. Data is stored at the selectable locations in the WFC-M memory with the capacity of 4 MB banked into 16 banks each having 256 kB. The samples for 13.5 minutes can be recorded at the compressed case. (The last bank of the WFC-M memory is also used as the WFC-H memory) The DSP also uses the waveform data at the FFT analysis, so that the simultaneous spectrum is provided by the OFA-M. The data recorded in the WFC-H and -M memory can be transferred at the bit-rate of 80 bytes/sec, i.e., for 54 minutes at the whole WFC-H memory and for the 14.2 hours at the whole WFC-M memory. Fortunately, transferred data can be selected by commands based on the spectra obtained by the OFA-H and the OFA-M.

The WFC-L is used as a double probe or a single probe mode. In the double probe (DPB) mode, the WFC-L measures the waveform from the sensor WANT-Ey over the frequency range from dc to 40 Hz. The signals from the sensors are sampled with a sampling frequency of 128 Hz and coded into 14-bit string data, which can be compressed by the μ-CODEC or the averaging algorithm into 8-bit string data. [Data is continuously transferred so that spectra of the observed waves can be analyzed on the ground.] In the single probe (SPB) mode, the WFC-L measures the spacecraft potential relative to the ambient plasma in the range from -10 V to +10 V, by feeding a bias current to the elements of WANT-Ey(+) and -Ey(-). The magnitude of the proper bias current is set by a command. At the low bit rate modes, the data transmission rate of the WFC-L becomes less than the sampling rate of 128 Hz in both modes. In these cases, the digital low-pass filter is operated by the DSP with cut-off frequencies of 1～32 Hz in order to avoid the aliasing.

		PAC-FRM	Frequency mode	Time mode
OFA-H 100 Hz ~ 32 kHz Ex or Ey	OBS-P (64kbps)	LFA	192ch / 0.5sec	24ch ----
			192ch / 1sec	24ch / 0.125sec
		PWS	192ch / 1sec	24ch ----
			192ch / 2sec	24ch / 0.25sec
	OBS-S (512bps)	LFA	96ch / 32sec	12ch ---
			96ch / 64sec	12ch / 8sec or SW / 4sec
		PWS	96ch / 64sec	12ch ---
			96ch / 128sec	12ch / 16sec or SW / 8sec
OFA-M 10 Hz ~ 1 kHz Ex, Ey, and phase(Ey/Ex)	OBS-P (64kbps)	LFA	64ch / 0.5sec	8ch ----
			64ch / 1sec	8ch / 0.125sec
		PWS	64ch / 1sec	8ch ----
			64ch / 2sec	8ch / 0.25sec
	OBS-S (512bps)	LFA	32ch / 32sec	4ch ---
			32ch / 64sec	4ch / 8sec
		PWS	32ch / 64sec	4ch ---
			32ch / 128sec	4ch / 16sec

*SW: Solar Wind mode (frequency, bandwidth, and amplitude at the narrowband peak in 1~32 kHz)
This mode becomes effective when the data transmission rate is below 8 kbps.

Table 2.2-4 Standard specifications of the OFA

	Output	Sampling Freq.		Data store and transfer
WFC-H	Ex or Ey 16bit	100 kHz		Stored in 256 kB memory for 10.24 msec × 128 samples (transfer time: 55 min. at 2kbps)
WFC-M	Ex, Ey 14 bit or 8bit	2.56 kHz		Stored in 4MB memory for 13.5 min. (transfer time: 14.2 hours at 2kbps)
WFC-L (DPB/SPB)	Ey 14bit or 8bit		PAC-FRM	Sampling Freq.
		OBS-P (64kbps)	LFA	128Hz / 14bit
			PWS	128Hz / 8bit or 64Hz / 14bit
		OBS-S (512bps)	LFA	2Hz / 8bit or 1Hz / 14bit
			PWS	1Hz / 8bit or 0.5Hz / 14bit

Table 2.2-5 Standard specifications of the WFC

2.2.2.4 WANT (Wire Antenna System)

The PLANET-B orbiter is equipped with four wire antenna (WANT) systems to detect plasma waves in the electrical field. The WANT packages are installed at 90-degree interval around the spinning axis of the satellite and to be deployed in orbit to obtain their operational configuration of 25 m in length. Although there are several contributions as well as considerable experience through the development and operation of the wire antenna systems aboard EXOS-D and GEOTAIL, both ISAS' scientific spacecraft, they will be of some value in a limited way because of the evolution of the system. Beyond the established technology for wire antenna design, the design of the PLANET-B WANT system involves further technological innovations to enhance its capability.

1) System evolution

The communication time delay is supposed to be over 30 minutes at deployment, which is executed after encountering Mars, while the wire deployment is to be completed in about 18 minutes. Thus the system is provided with quite a new additional capability of autonomous deployment management. The system is required to detect any contingency of deployment based on information through the length monitoring device without any ground based assistance and, if necessary, execute emergency deployment suspension of the associated wires to preserve dynamical balance of the entire spacecraft.

The vacuum lubrication technique will another example of significant improvements. This is required as the driving mechanism takes its task as long as 14 months later after the launch. To reduce associated risks, the potentiometer is replaced by optical sensing device (photo diode) to detect the deployment length of the wire and the gear assembly is designed to be composed of self-lubrication materials instead of the vacuum grease.

Moreover, the limited capacity of the launching rocket results in system design with an extremely strict weight budgetary limit. To make the system efficient, the driving and interface circuits of the four WANT systems are unified in a single unit installed in the PWA, in sharp contrast to the ones of the previous satellites having individual circuits. To cut the weight, the output capacity of the step motor is lowered although producing the same level of the driving torque through the high reduction rate of the gear assembly. Further weight reduction has been achieved by introduction of light-weight materials leading to the entire system weight of 520g (1.5 kg for the EXOS-D and GEOTAIL).

2) System Configuration

The PLANET-B orbiter, having nominal spin rate of 7.5 rpm (tentative) is equipped with four wire antenna systems (WANT) to detect plasma waves in the electrical field. Four modules of the WANT packages are installed at 90-degree interval around the spinning axis of the satellite and to be deployed in orbit to obtain their operational configuration of 25 m in length. The dimensions of the core spacecraft is approximately 1.6 m (W) x 1.6 m (D) x 0.58 m (H). Figure 2.2-9 depicts a schematic diagram of the spacecraft in its operational configuration. It is equipped with six modules to be deployed in orbit: four sets of WANTs; a mast (MST) of 5 m in length to reduce magnetic interference from the satellite against scientific instruments; a thermal protection assembly (TPA-S).

The attitude and orbit of the satellite are to be controlled through the Reaction Control System (RCS) of the monopropellant engines. To hold the high gain communication link to the earth, the orbiter is to execute attitude maneuver approximately one degree per day throughout the mission lifetime, which induces the vibration of the wires as well as the satellite attitude perturbation. Corning motion of the satellite is strictly required to be maintained within 0.7 deg in angle for the same purpose.

The WANT system is composed of: Be-Cu wire line with a tiny tip mass for generating a moderate tension; driving mechanism consisting of a DC step motor, driver circuit and gear assembly; telemetry and command interface; monitoring devices of deployed length and deflection angle; and deployment management software. The driving and interface circuits as well as management software are installed in the plasma wave analyzer (PWA) of the onboard scientific instruments. The schematic diagram of the WANT package is displayed in Figure 2.2-10.

Each wire can be divided into 3 parts: naked tip portion of bundled Be-Cu core lines with diameter of 0.38 mm each; the middle part covered by polyimide sheet for electrical insulation from the plasma; and the root part also shielded by the copper-mesh for suppression of the electric interference from the core satellite. A tip oil damper of 18.5 g to suppress the vibration of the wire also provide the WANT wire with moderate tension. The characteristics of the WANT system is summarized in Table 2.2-6. All the WANT wires can be deployed either independently or simultaneously at the constant speed of 2.35 cm/s. The centrifugal tension acting on the wire and its appendage is trimmed by a step motor.

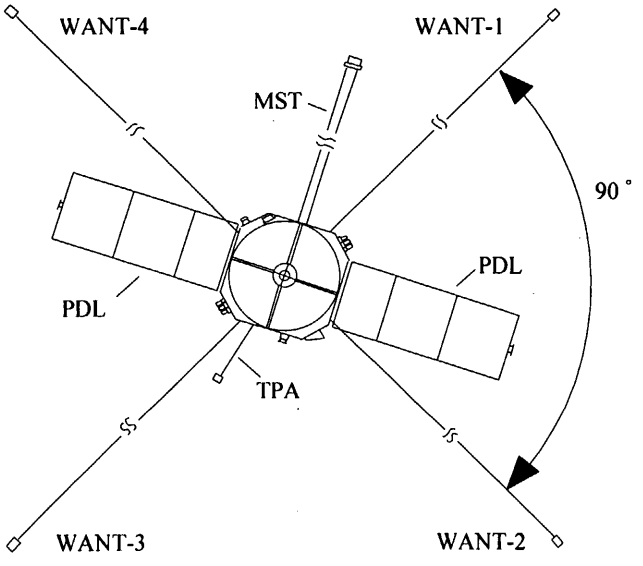

Figure 2.2-9 Entire system's configuration in its operational mode.

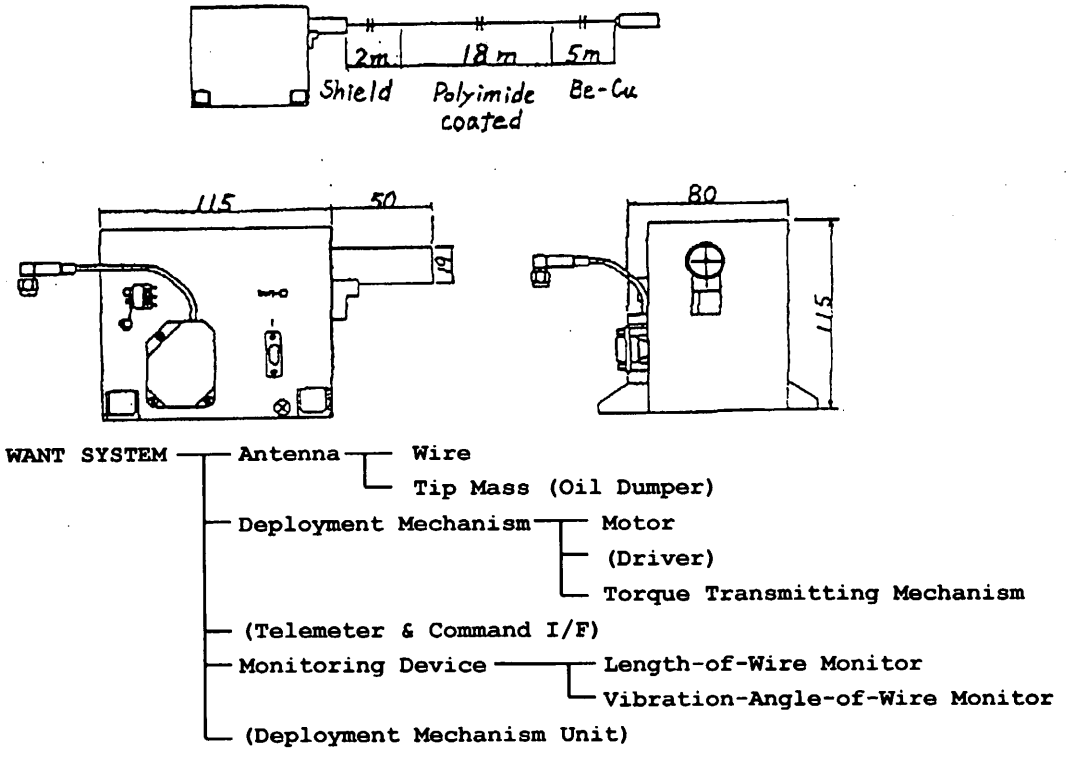

Figure 2.2-10 Schematic diagram of the wire antenna package.

Table 2.2-6 Characteristics the PLANE-B WANT system.

Total Weight	520 g
Dimensions of Case	80x115x115 mm
Power Consumption	3.34W(at Deployment), 0.1W(at Observation)
Total Wire Length	25 m
Wire's Diameter and Mass Density from tip to 5m from 5m to 23m from 23m to 25	 ϕ 0.38mm, 0.8kg/m(naked) ϕ 0.62mm, 1.1g/m(covered by Polyimide sheet) ϕ 1.13mm, 3.7g/m(covered by Copper alloy shield and Polyimide sheet)
Speed of Wire Deployment	2.35 cm/sec
Tip Mass	18.5 g

3) Extension Sequence

Although the nominal procedure is aimed at the simultaneous extension of the wires, each wire of WANTs can be deployed either independently or simultaneously by command "WANT_ON_SET". After the "WANT_DRIVE-ON" command is released, the deployment procedure is controlled by the autonomous deployment management software, which detects any contingency of deployment based on information through the length monitoring device without any ground based assistance and, if necessary, execute emergency deployment suspension of the associated wires to preserve dynamical balance of the entire spacecraft. In a suspended case, a recovery operation is to be commanded from the ground. The fault tree analysis and the associated emergency operation manual are to be revised.

As extension of wires together with succeeding deployment of the other appendages leads to a reduction in satellite's spin rate, spin-up procedures are required prior to extension mode executed to maintain the operational spin rate. The amount of the spin-up is to be determined.

4) Numerical Analysis (to be revised)

The primary interest of the numerical analysis here is to have some appreciation as to satellite coning motion as well as wires oscillation as affected by:

(1) normal extension of the WANT wires;
(2) asymmetrical extension (due to some malfunction);
(3) initial nutation of the satellite;
(4) attitude maneuver.

The spin rate of the satellite will play a key role on the entire system's dynamical behavior. First of all, the initial spin rate of the satellite is required to be over 15 rpm as the asymmetrical extension of the wires leads to as much as 0.6 deg of the satellite coning angle, slightly below the allotted one (0.7 deg). It should be noted that the autonomous extension management software is designed to maintain the deference of the extended length of the wires within 2 m. For this spin rate, the induced in-plane oscillation angle of the wires due to the normal deployment is reduced to as small as 2.5 deg (limit 4 deg).

Another key factor to the wires deployment is the initial nutational angle of the satellite. To hold the high gain communication link, it must be 0.5 deg at most although it is considered practical. Finally, the attention should be directed to the effect of the daily attitude maneuver, which is executed through pair of the axial thrusters of 2.3 N in magnitude. It is revealed, through the analysis, that the impulsive time duration of the thruster firing has significant influence on the wires vibration and should be as small as 100 msec to maintain the attitude perturbation within the specified tolerance limit.

5)Autonomous Deployment Management Software

The fundamental design standard for the autonomous deployment control software can be summarized as follows:

(1) simultaneous extension of the four wire antenna systems only if no malfuction is detected.
(2) deployment suspension of a pair of antennas in symmetrical position (command "SEL_OFF") when contingency is detected for at least one of the wires to avoid excess attitude perturbation.
(3) recovery operation to salvage the suspended system, which is to be commanded from the ground

It should be recognized that the abnormal deployment must be suspended onboard because the telemetry data showing the contingency reaches the earth after the other wires are completely deployed thus leading to loss of the communication link. The recovery operation, however, can be executed from the earth in the light of the emergency operation manual as well as the results of the fault tree analysis, which are both prepared prior to the launch. A representative among such operations, when entanglement is detected for only one wire, can be:

[Step1] retract the healthy wire in symmetrical position to adjust the difference in deployed length.
[Step2] retract the suspended wire by small amount to disentangle the wire.
[Step3] re-execute the autonomous deployment.
[Step4] go to Step2 when the deployment is suspended.

Deployment is detected involving contingency when one of the following situations is detected.

(1) retract status shows that the tip mass is not released from its storage, possibly leading to wire entanglement inside the body.
(2) Deference in extended length of a pair of wires in symmetrical position reaches its tolerable limit (2m), resulting in the dynamical unbalance of the spacecraft.
(3) length monitor registers no increment for the duration of 90 seconds, equivalent to allotted difference in deployed length when deployment of the wire in the symmetrical position is healthy.
(4) deployment velocity exceeds its permitted threshold level, indicating failure in hardware.

Information to detect contingency can be obtained by the following devices.

(1) micro-switch to make sure whether the tip mass is released from its storage and deployment is initiated.
(2) Length monitor to measure the deployment length of the wire, which is composed of a combination of photodiode and phototransistor.

The diode and transistor detects a revolution of the driving roller through a slit of the disk installed on the roller. For redundancy, two pairs of monitors are utilized.

The fundamental architecture of the autonomous deployment control is displayed in Figure 2.2-11 while its essential functions are summarized as follows.

(1) to monitor the condition of the deployment.
(2) to detect contingency as defined in the study.
(3) to suspend deployment of the associated wire.
(4) to issue the information to specify the contingency.
(5) to wait ground-based command to recover the deployment.

The performance of the autonomous deployment control system was evaluated through a series of intensive physical simulation tests which involve the flight-model software as well as the hardware although the revolutionary velocity of the driving roller was controlled by an additional electronics to make the system detect intentional contingency. Though the tests, the system established its effectiveness in monitoring the deployment condition, detect malfunction, and taking appropriate measures.

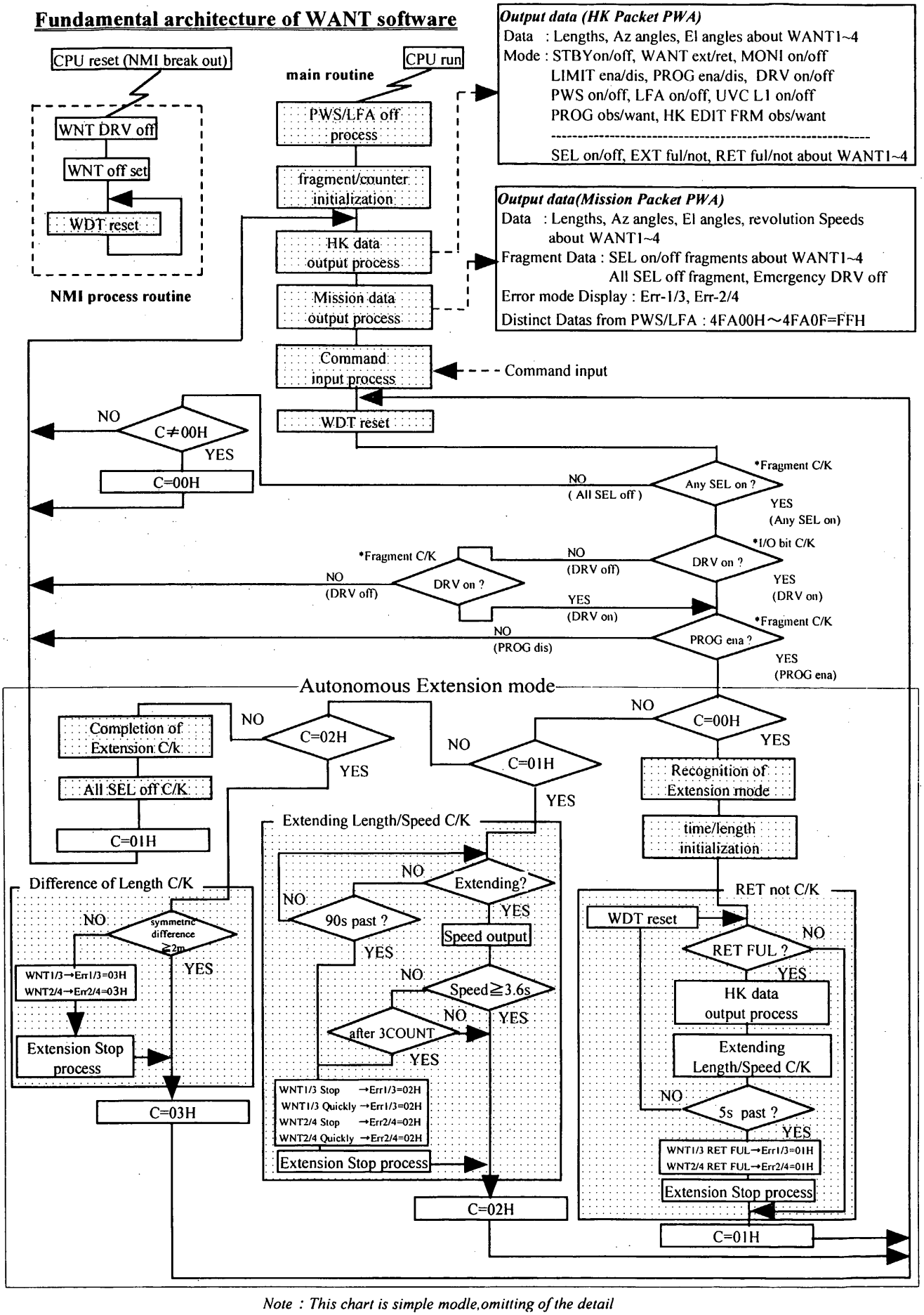

Note : This chart is simple modle,omitting of the detail

Fig 2.2-11 Fundamental archetecture of autonomous deployment management software

6) Wire Antenna

A couple of wire dipole antennas is orthogonal to each other extended in a plane perpendicular to the spacecraft spin axis. Each dipole antenna has a length of 50 m tip-to-tip. The configuration of the dipole antennas has already be shown in Figure 2.2-4. The preamplifiers are placed in the close vicinity of the antenna deploying mechanisms, which are mounted inside the side panel of the spacecraft.

Figure 2.2-11 shows an outline drawing of the WANT element. The element is 25 m in length. The surface of the element is coated with a thin Polyimid film for electrical insulation from the ambient plasma, except the part of 5 m from the tip of the wire. The foot part of 2 m from the antenna deploying mechanism is shielded by a copper-mesh sleeve which is connected to the 2nd-common of the preamplifier through a resistor of 100 Ω to suppress the effect of the electrical interference from the components onboard the spacecraft.

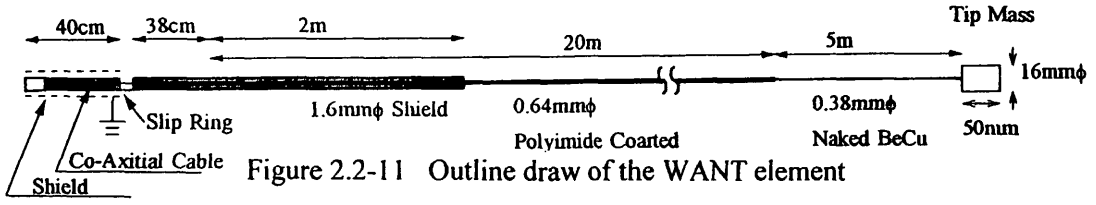

Figure 2.2-11 Outline draw of the WANT element

6) Preamplifiers and their Peripheral Circuits

Figure 2.2-12 is a diagram of the preamplifier and its peripheral circuit for the WANT system. The electric potential induced on the WANT element is fed to the PWS and LFA (WFC-M, OFA) preamplifier (consisting of an FET source follower with input impedance of 100 MΩ and –2.5 dB gain) through a 220 pF decoupling capacitor. The lower limit of the passing frequency of the preamplifier is 8 Hz. The output impedance of the preamplifier is about 200 Ω. The WFC-L preamplifier (an operational amp.) is connected to the WANT through a voltage-divider circuit (200 MΩ and 1 GΩ). The bias current for the WFC-L (SPB) is fed through a resister 20 MΩ to each WANT element by turning on the switch (SW-1). The amount of bias current is chargeable from –0.4 μA to +0.4 μA in 256 steps by command. The dc calibration signal is fed by turning on the switch (SW-2).

In order to calibrate the gain and phase characteristics of the overall the band-H, -M, and –L (DPB) receiver systems including the preamplifiers, a calibration signal is prepared. The calibration signal is a composite signal of the four square waves with same amplitude and with different basic frequencies to cover the receiver band from 10 Hz to 30 kHz. The fundamental frequencies of these square waves are 10 Hz, 100 Hz, 1 kHz and 10 kHz. It is fed to each of the WANT antenna elements by turning on the switch (SW-3) through a resistor of 2 kΩ. The calibration signal level is changed to 0 dB, -20 dB, and -40 dB by a telemetry command. The dc calibration signal for the band-L (SPB) sweeps in the range from -8 V to +8 V with 1 V resolution.

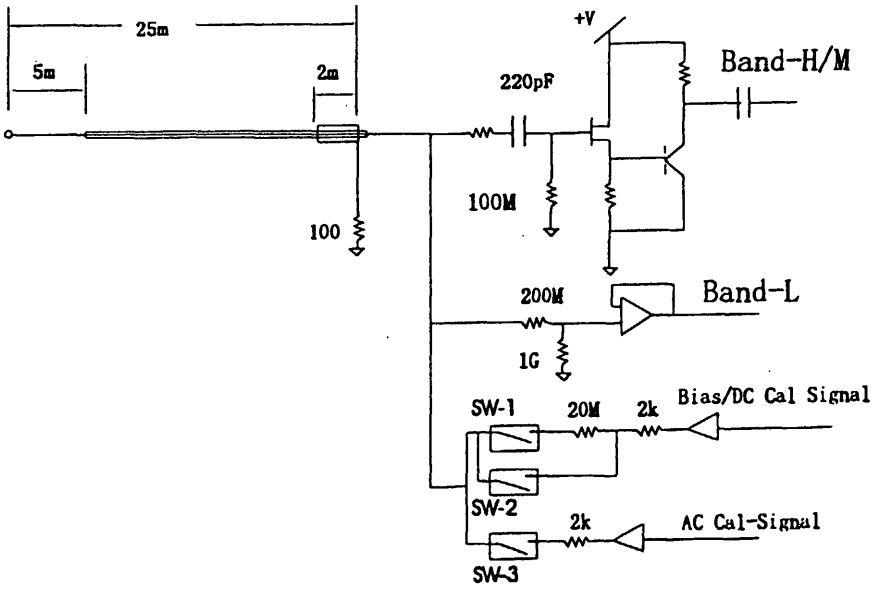

Figure 2.2-12 Block diagram of the preamplifier and its peripheral circuit

2.2.2.5 Software

The PWA software consists of the following main routine and subroutines for interrupts, command processing, data acquisition and edit subroutines for PWS and LFA.

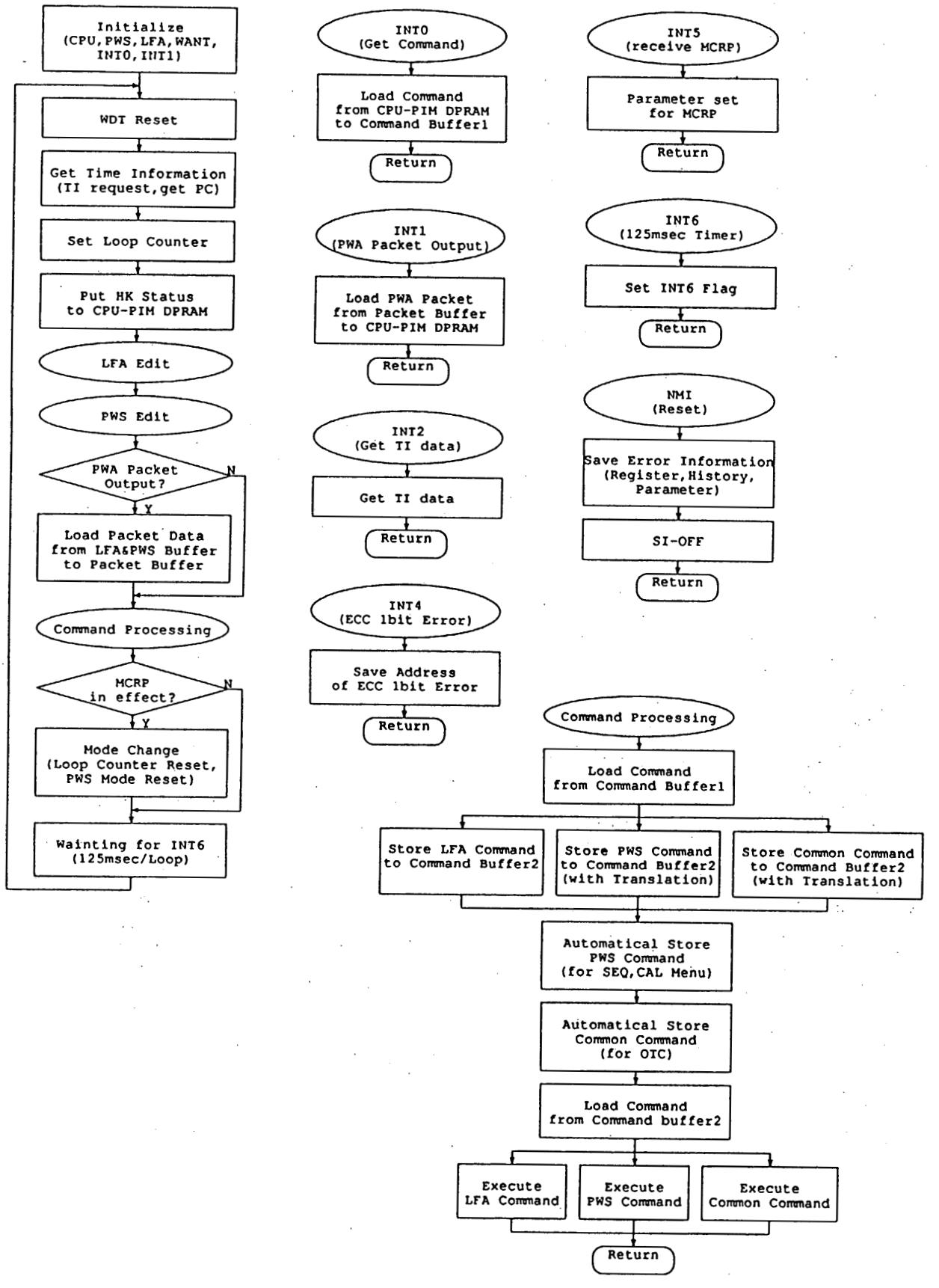

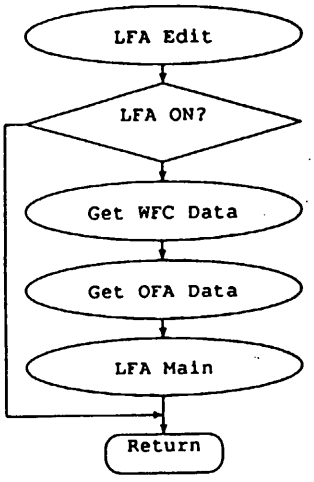
LFA Edit
LFA ON?
Get WFC Data
Get OFA Data
LFA Main
Return

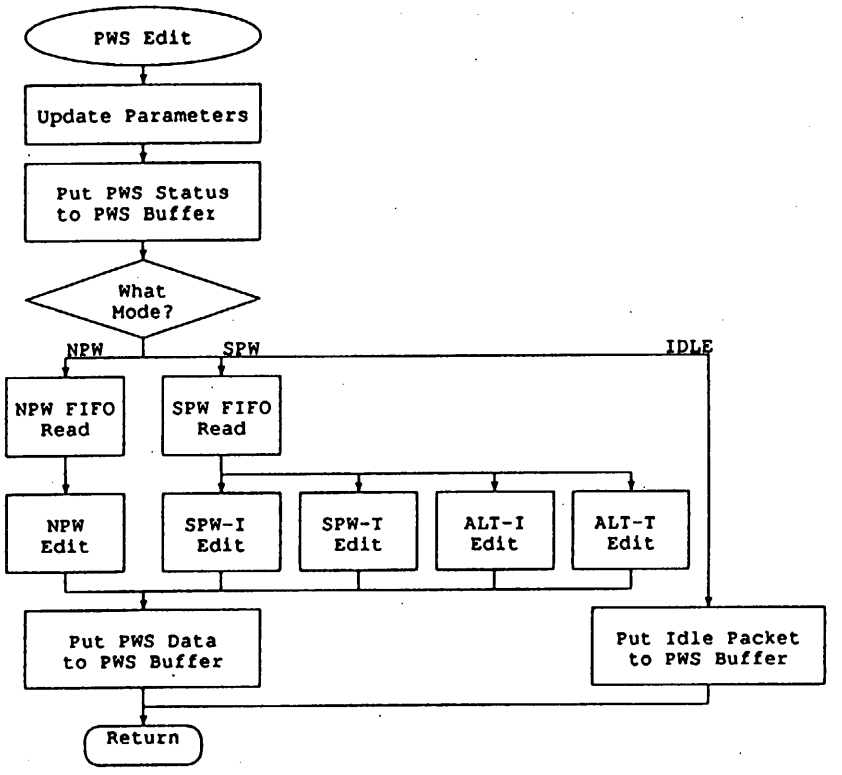
PWS Edit
Update Parameters
Put PWS Status to PWS Buffer
What Mode?
NPW
SPW
IDLE
NPW FIFO Read
SPW FIFO Read
NPW Edit
SPW-I Edit
SPW-T Edit
ALT-I Edit
ALT-T Edit
Put PWS Data to PWS Buffer
Put Idle Packet to PWS Buffer
Return

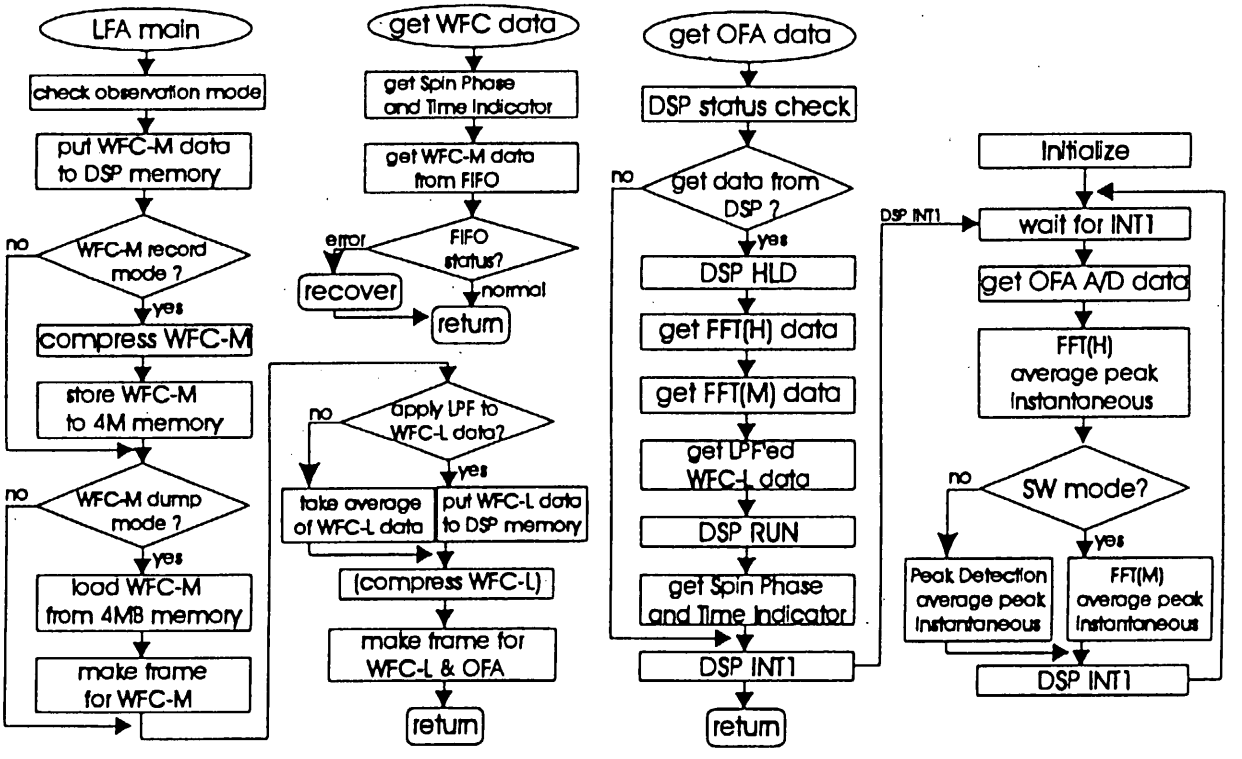
LFA main
check observation mode
put WFC-M data to DSP memory
WFC-M record mode ?
no
yes
compress WFC-M
store WFC-M to 4M memory
WFC-M dump mode ?
load WFC-M from 4MB memory
make frame for WFC-M
get WFC data
get Spin Phase and Time Indicator
get WFC-M data from FIFO
FIFO status?
error
normal
recover
return
apply LPF to WFC-L data?
take average of WFC-L data
put WFC-L data to DSP memory
(compress WFC-L)
make frame for WFC-L & OFA
return
get OFA data
DSP status check
get data from DSP ?
DSP HLD
get FFT(H) data
get FFT(M) data
get LPFed WFC-L data
DSP RUN
get Spin Phase and Time Indicator
DSP INT1
return
Initialize
DSP INT1
wait for INT1
get OFA A/D data
FFT(H) average peak Instantaneous
SW mode?
Peak Detection average peak Instantaneous
FFT(M) average peak Instantaneous
DSP INT1

2.2.3 Size, Weight, and Power Consumption

2.2.3.1 Size and Weight

	Size (mm)	Weight (kg)
PWA-E	261 × 230 × 175	4.98
WANT 1-4	80 × 115 × 100	Total: 2.08
Preamp 1-4	100 × 63 × 35	Total : 0.64

2.2.3.2 Power Consumption

PWA Status									Current (mA)					Power	Remarks
SICPU	WPRE	LFA	DSP	CAL	PWS	PWRAMP	DC/DC	CAL	+5V	+12V	-12V	+29V	BUS	Watt	
ON	OFF	OFF	RST	OFF	OFF	OFF	OFF	OFF	418	25	39	0	350	7.7	
RUN	OFF	OFF	RST	OFF	OFF	OFF	OFF	OFF	565	32	50	0	400	8.8	
RUN	ON	OFF	RST	OFF	OFF	OFF	OFF	OFF	565	162	70	0	500	11	
RUN	ON	ON	RST	OFF	OFF	OFF	OFF	OFF	550	345	250	0	730	16.06	
RUN	ON	ON	RUN	OFF	OFF	OFF	OFF	OFF	580	345	250	0	750	16.5	
RUN	ON	ON	RUN	ACAL	OFF	OFF	OFF	OFF	590	345	245	0	750	16.5	
RUN	ON	ON	RUN	DCAL	OFF	OFF	OFF	OFF	590	345	245	0	750	16.5	
RUN	ON	ON	RUN	BIAS	OFF	OFF	OFF	OFF	590	345	245	0	750	16.5	
RUN	ON	ON	RUN	OFF	IDLE	OFF	OFF	OFF	639	765	462	0	1190	26.18	
RUN	ON	ON	RUN	OFF	DS	OFF	OFF	OFF	639	765	465	0	1190	26.18	
RUN	ON	ON	RUN	OFF	DS	OFF	OFF	LCAL	643	850	507	0	1260	27.72	#1
RUN	ON	ON	RUN	OFF	PL	OFF	OFF	OFF	639	765	465	0	1190	26.18	
RUN	ON	ON	RUN	OFF	PL	OFF	OFF	PCAL	643	850	507	0	1270	27.94	#2
RUN	ON	ON	RUN	OFF	NEI	OFF	OFF	OFF	643	862	510	0	1290	28.38	
RUN	ON	ON	RUN	OFF	NEI	OFF	OFF	NCAL	643	862	510	0	1290	28.38	
RUN	ON	ON	RUN	OFF	SPWN	ON	ON	OFF	643	828	495	150	1480	32.56	#3
RUN	ON	ON	RUN	OFF	SPWN	OFF	ON	OFF	642	828	492	25	1300	28.6	
RUN	ON	ON	RUN	OFF	SPWN	OFF	OFF	OFF	635	825	495	0	1260	27.72	
RUN	ON	ON	RUN	OFF	SPWN	OFF	OFF	SCAL	645	840	495	0	1270	27.94	
RUN	ON	ON	RUN	OFF	ALT	ON	ON	OFF	675	900	500	285	1780	39.16	#4
RUN	ON	ON	RUN	OFF	ALT	OFF	ON	OFF	665	900	500	25	1360	29.92	
RUN	ON	ON	RUN	OFF	ALT	OFF	OFF	OFF	660	900	500	0	1310	28.82	
RUN	ON	ON	RUN	OFF	ALT	OFF	OFF	ACAL	663	912	500	0	1330	29.26	

#1	+12V:	840-860 mA	-12V:	495-520 mA	BUS:	1330-1370 mA
#2	+12V:	840-860 mA	-12V:	495-520 mA	BUS:	1330-1370 mA
#3	+29V:	130-170 mA				
#4	BUS:	1700-1850 mA				

2.2.4 Operation

The content of telemetry data of the PWA depends on the observation mode. The PWS and the LFA use packets allocated to PWA at the rate of 2:1 or 1:2, respectively.

Obs. Mode	PWA packets / 64 packet	64 kbps (pac./sec)	32 kbps (pac./sec)	16 kbps (pac./sec)	8 kbps (pac./sec)	4 kbps (pac./sec)	2 kbps (pac./sec)	512 bps (pac./sec)
OBS-P, OBS-S	16	4	2	1	1/2	1/4	1/8	1/16
WFC-M	36	9	9/2	9/4	9/8	9/16	9/32	9/64
MIC, UVS/XUV, MDC	8	2	1	1/2	1/4	1/8	1/16	1/32

Table 2.2-7 Data transmitting rate of the PWA (packets/sec)

1) PWS data packets

The data transmission rate of the PWS data has been shown in Tabe2.2-2. The detailed description of the PWA mission data packet should be refereed to the Satellite Information Base (SIB).

2) LFA data packets

The OFA and WFC-L data are always transmitted. The WFC-H and -M data are only transmitted in WFC-M Dump mode. The mission packet allocations are summarized in Table 2.2-8 and Table 2.2-9.

Obs. Mode	PAC-FRM	64 kbps (bytes/sec)	32 kbps (bytes/sec)	16 kbps (bytes/sec)	8 kbps (bytes/sec)	4 kbps (bytes/sec)	2 kbps (bytes/sec)	512 bps (bytes/sec)
OBS-P, OBS-S	PWS	512	256	128	64	32	16	8
	LFA	1024	512	256	128	64	32	16
WFC-M	WFC	---	1440	720	360	180	90	
MIC, UVS/XUV, MDC	PWS	256	128	64	32	16	8	---
	LFA	512	256	128	64	32	16	

Table 2.2-8 Data transmitting rate of the LFA (bytes/sec)

Mode		Common Status	LFA					PWS
			status	spare	WFC-L	OFA-H	OFA-M	
OBS-P, OBS-S UVS/XUV MIC, MDC	Format PWS	16	8	8	32	48	48	272
	Format LFA				64	96	96	144
WFC-M	Packet#: 0-7				WFC-M: 320			80
	Packet#: 8				128	96	96	80

Table 2.2-9 Mission packet allocation of the LFA (bytes)

2.2.5 Commands and Telemetry

2.2.5.1 Commands

1) Discrete Command

Table 2.2-C1: PWA Command

XY	Command Name	Function
01	CPU_ON	CPU On
10	HTR_ENA	Heater Enable
11	HTR_DIS	Heater Disable
12	ECC_ENA	ECC Enable
13	ECC_DIS	ECC Disable
14	WDT_ENA	WDT Enable
15	WDT_DIS	WDT Disable
16	CPU_RUN	CPU Run
17	CPU_RST	CPU Reset
18	I_LIMIT_ENA	CPU Current Limiter Enable
19	I_LIMIT_DIS	CPU Current Limiter Disable
74	UVC_L1_ON	UVC Level 1 On
76	PAC_FRM_SET	PWA Packet Format Set
78	HTR_L1_ON	Heater Control Level 1 On
7A	HTR_L1_OFF	Heater Control Level 1 Off

Table 2.2-C2: PWS Command

XY	Command Name	Function
80	PWS_ON	PWS Power On
82	PWS_OFF	PWS Power Off
84	PWS_DCDC_ON	PWS DC/DC Converter On
86	PWS_DCDC_OFF	PWS DC/DC Converter Off
88	PWS_PAMP_ON	PWS Power Amp On
8A	PWS_PAMP_OFF	PWS Power Amp Off
90	PWS_RLY_ON_SET	PWS Relay On Set
92	PWS_RLY_OFF_SET	PWS Relay Off Set
94	PWS_MODE_SET	PWS Mode Set
96	PWS_MENU_SSET	PWS Menu Set
98	PWS_RX_SET	PWS Local Mode and Setp Set
9A	PWS_GAIN_SET	PWS Gain Set
9E	PWS_FREQ_SET	PWS Frequency Table Set
A0	PWS_TX_PC_SET	TX Start PC and Stop PC Set
A4	PWS_PARA_SET	PWS Parameter Table Set
A6	PWS_EDIT_SET	PWS Edit Parameter Set

Table 2.2-C3: LFA Command

X	Y	Command Name	Function
3	0	LFA_ON_SET	LFA On Mode Set
3	2	LFA_OFF_SET	LFA Off Mode Set
3	4	LFA_BIAS_SET	LFA WFCD BIAS Parameter Set
3	6	LFA_BANK_SET	LFA WFCM Memory Bank Set
3	A	LFA_DSP_SET	LFA DSP Set
3	C	LFA_CAL_SET	LFA CAL Level Set
3	E	LFA_OFA_MODE_SET	LFA OFA Mode Set
4	0	LFA_WFCM_REC	LFA WFCM Record Set
4	2	LFA_READ_AD_SET	LFA WFCM Read Address Set
4	4	LFA_CMPR_SET	LFA WFCM Compress Mode Set
4	6	LFA_AGC_SET	LFA AGC Set
4	8	LFA_OBS_SET	LFA Observation Mode Set
4	A	LFA_WFCH_REC	LFA WFCH Set

Table 2.2-C4: WANT Command

XY	Command Name	Function
70	WNT_PRE_ON	WANT PreAmp Power On
72	WNT_PRE_OFF	WANT PreAmp Power Off
C0	WNT_ON_SET	WANT On Parameter Set
C2	WNT_OFF_SET	WANT Off Parameter Set
C4	WNT DRV ON	WANT 1-4 Drive On
C6	WNT_DRV_OFF	WANT 1-4 Drive/Stand-by Off
C8	WNT_PROG_ENA	WANT Program Enable
CA	WNT_PROG_DIS	WANT Program Disable

3) Block Command

3-1) PWA Common Block Command

Table 2.2-C5: Common Block Command

XY	Command Name	BC		Function	Description
76	PAC_FRM_SET	1 Bytes	1	Packet Format	1:PWS,2:LFA,3:WFCM

3-2) PWS Block Command

Table 2.2-C6: PWS Block Command

XY	Command Name	BC		Function	Description
90	PWS_RLY_ON_SET	4 Bytes	1-4	PWS Relay On Set	Table 2.2-C7
92	PWS_RLY_OFF_SET	4 Bytes	1-4	PWS Relay Off Set	Table 2.2-C7
94	PWS_MODE_SET	1 Byte	1	PWS Mode Set	Table 2.2-C8
96	PWS_MENU_SET	1 Byte	1	PWS Menu Set	Table 2.2-C9
98	PWS_RX_SET	2 Bytes	1 2	Local Mode Set Local Step Set	0:Sweep, 7:Fix 00-FF_H
9A	PWS_GAIN_SET	1 Byte	1	RX Gain Set	1:L,2:M,3:H
9E	PWS_FREQ_SET	5 Bytes	1 2-5	Mode/Step Select Frequency Set	Table 2.2-C10
A0	PWS_TX_PC_SET	2 Bytes	1 2	TX Start PC Set TX Stop PC Set	00-FF_H(PC/32) 00-FF_H(PC/32)
A4	PWS_PARA_SET	5 Bytes	1 2-5	Address Set Code Set (+0,+1,+2,+3)	Table 2.2-C11,12,13,14
A6	PWS_EDIT_SET	1 Byte	1	Trigger Level Set	00-FF_H

Table 2.2-C7: PWS_RLY_ON/OFF_SET

	B0	B1	B2	B3	B4	B5	B6	B7
1st Byte	CAL13	CAL24	GCAL	LCAL	PCAL	SCAL	NCAL	ACAL
On Set	ON	ON	ON	ON	ON	ON	ON	ON
Off Set	OFF	OFF	OFF	OFF	OFF	OFF	OFF	OFF
2nd Byte		CENT	LOAD	PWR	CB4	CB3	CB2	CB1
On Set		ON	ON	H	ON	ON	ON	ON
Off Set		OFF	OFF	L	OFF	OFF	OFF	OFF
3rd Byte				ANT	TPWR	TX24	TX13	NPWR
On Set				REV	ON	ON	ON	ON
Off Set				NRM	OFF	OFF	OFF	OFF
4th Byte				DET	FIL	RFDIV	NSIG	PSIG
On Set				WID	WID	ON	ON	ON
Off Set				NRW	NRW	OFF	OFF	OFF

Table 2.2-C8: PWS_MODE_SET

BC (Hex)	Mode Group	Edit Mode	
00	DS	NPW	
10	PL	NPW	
20	NEI	NPW	
80-86	SPWN	Ionogram	(25,50,75,100,150,200,250μsec)
8C-8E	SPWN	Trigger	(Mid-25,Far-50,Near-25μsec)
90-96	SPWH	Ionogram	(25,50,75,100,150,200,250μsec)
9C-9E	SPWH	Trigger	(Mid-25,Far-50,Near-25μsec)
A0-A2	ALT	Ionogram	(25,50,75μsec)
A8	ALT	Ionogram test	(Mid-25μsec)
AC	ALT	Trigger	(Mid-25μsec)
F0	IDLE	IDLE	

Table 2.2-C9: PWS_MENU_SET

BC (Hex)	Menu Item	Function
00-0F	NPW0-NPW15	Passive Observation
80-8F	SPW0-SPW15	SPW Observation
A0-AF	SPWT0-SPWT15	SPW Test(No Transmission)
C0-C7	SEQ0-SEQ7	Sequential Observation
E0	AUTO_CAL	CAL Sequence
E8	AUTO_GCAL	Ground CAL (DS,PL,SPW,ALT)
E9	AUTO_LCAL	Level CAL (DS,PL)
EA	AUTO_PCAL	Phase CAL (PL)
EB	AUTO_NCAL	NEI CAL
EC	AUTO_SCAL	SPW CAL
ED	AUTO_ACAL	ALT CAL
F0	AUTO_IDLE	All Relay Reset
FF	AUTO_OFF	All Relay Reset & PWS Off

Table 2.2-C10: PWS_FREQ_SET

Mode	Step (Hex)	1st Byte (Hex)	2nd Byte	3rd Byte	4th Byte	5th Byte
NPW	00-3F	00	Start Frequency[kHz]		Stop Frequency[kHz]	
	40-7F	01				
	80-BF	02				
	C0-FF	03				
	(4th Byte)	08	Frequency[kHz]		Step	
	00-FF	0F	Return to Default Table			
SPWN	00-3F	80	Start Frequency[kHz]		Stop Frequency[kHz]	
	40-7F	81				
	80-BF	82				
	C0-FF	83				
	(4th Byte)	88	Frequency[kHz]		Step	
	00-FF	8F	Return to Default Table			
SPWH	00-3F	90	Start Frequency[kHz]		Stop Frequency[kHz]	
	(4th Byte)	98	Frequency[kHz]		Step	
	00-3F	9F	Return to Default Table			
ALT	00-1A	A0	Start Frequency[kHz]		Stop Frequency[kHz]	
	1B-35	A1				
	36-50	A2				
	(4th Byte)	A8	Frequency[kHz]		Step	
	06,08,0A	A9	Center Frequency[kHz]		Frequency Width[kHz]	
	00,10	AA				
	00-50	AF	Return to Default Table			

Table 2.2-C11: NPW Observation Menu

Address (Hex)	Menu	Mode +0 (Hex)		Gain,Local-Mode +1 (Hex)		Local-Step +2 (Hex)		Band +3 (Hex)	
000	NPW0	00	DS	30	Gain-H,Sweep	00		00	Narrow
004	NPW1	00	DS	20	Gain-M,Sweep	00		00	Narrow
008	NPW2	00	DS	37	Gain-H,Fix	40	Local-40	00	Narrow
00C	NPW3	00	DS	37	Gain-M,Fix	C0	Local-C0	00	Narrow
010	NPW4	10	PL	30	Gain-H,Sweep	00		00	Narrow
014	NPW5	10	PL	20	Gain-M,Sweep	00		00	Narrow
018	NPW6	10	PL	37	Gain-H,Fix	40	Local-40	00	Narrow
01C	NPW7	10	PL	37	Gain-H,Fix	C0	Local-C0	00	Narrow
020	NPW8	20	NEI	30	Gain-H,Sweep	00		00	Narrow
024	NPW9	20	NEI	20	Gain-M,Sweep	00		00	Narrow
028	NPW10	00	DS	10	Gain-L,Sweep	00		00	Narrow
02C	NPW11	10	PL	10	Gain-L,Sweep	00		00	Narrow
030	NPW12	00	DS	30	Gain-H,Sweep	00		03	Wide
034	NPW13	10	PL	30	Gain-H,Sweep	00		03	Wide
038	NPW14	20	NEI	10	Gain-L,Sweep	00		00	Narrow
03C	NPW15	F0		00		00		00	

Table 2.2-C12: SPW Observation Menu

Address (Hex)	Menu	Mode +0 (Hex)		Gain,Local-Mode +1 (Hex)		Local-Step +2 (Hex)		Trigger Level +3 (Hex)	
040	SPW0	80	SPWN-25	20	Gain-M,Sweep	00		00	
044	SPW1	81	SPWN-50	20	Gain-M,Sweep	00		00	
048	SPW2	82	SPWN-75	20	Gain-M,Sweep	00		00	
04C	SPW3	83	SPWN-100	20	Gain-M,Sweep	00		00	
050	SPW4	80	SPWN-25	27	Gain-M,Fix	40	Local-40	00	
054	SPW5	80	SPWN-25	27	Gain-M,Fix	C0	Local-C0	00	
058	SPW6	8C	SPWN-25T	20	Gain-M,Sweep	00		80	Trigger-80
05C	SPW7	8D	SPWN-50T	20	Gain-M,Sweep	00		80	Trigger-80
060	SPW8	90	SPWH-25	20	Gain-M,Sweep	00		00	
064	SPW9	92	SPWH-75	20	Gain-M,Sweep	00		00	
068	SPW10	9C	SPWH-25T	20	Gain-M,Sweep	00		80	Trigger-80
06C	SPW11	9D	SPWH-50T	20	Gain-M,Sweep	00		80	Trigger-80
070	SPW12	A0	ALT-25	27	Gain-M,Fix	00	Local-00	00	
074	SPW13	A1	ALT-50	27	Gain-M,Fix	00	Local-00	00	
078	SPW14	AC	ALT-25T	27	Gain-M,Fix	00	Local-00	80	Trigger-80
07C	SPW15	F0		00		00		00	

Table 2.2-C13: Sequencial Observation Menu

Address (Hex)	Menu	Menu1 +0 (Hex)		Time1 +1 (Hex)		Menu2 +2 (Hex)		Time2 +3 (Hex)		Menu3 +4 (hex)		Time3 +5 (Hex)		Menu4 +6 (Hex)		Time4 +7 (Hex)	
080	SEQ0	00	NPW0	08	16sec	04	NPW4	08	16sec	08	NPW8	08	16sec	F0		00	
088	SEQ1	01	NPW1	08	16sec	05	NPW5	08	16sec	09	NPW9	08	16sec	F0		00	
090	SEQ2	00	NPW0	08	16sec	08	NPW8	08	16sec	80	SPW0	20	64sec	F0		00	
098	SEQ3	00	NPW0	08	16sec	08	NPW8	08	16sec	86	SPW6	20	64sec	F0		00	
0A0	SEQ4	00	NPW0	08	16sec	88	SPW8	08	16sec	08	NPW8	08	16sec	8C	SPW12	08	16sec
0A8	SEQ5	00	NPW0	08	16sec	8A	SPW10	08	16sec	08	NPW8	08	16sec	8E	SPW14	08	16sec
0B0	SEQ6	F0		00		F0		00		F0		00		F0		00	
0B8	SEQ7	F0		00		F0		00		F0		00		F0		00	

Table 2.2-C14: PWS Common Parameter

Address:C0		B0	B1	B2	B3	B4	B5	B6	B7
		ANT							
	1	REV							
	0	NRM							

Address:C1		B0	B1	B2	B3	B4	B5	B6	B7
			CENT	LOAD	PAMP	CB4	CB3	CB2	CB1
	1		ON	ON	H	ON	ON	ON	ON
	0		OFF	OFF	L	OFF	OFF	OFF	OFF

Address (Hex)	BC		Function	Description
C2	1 Byte	1	TX Start PC Set	00-FF_H(PC/32)
C3	1 Byte	1	TX Stop PC Set	00-FF_HPC/32)
C4	2 Byte	1-2	SPW-T Sampling Mask	0-639
C6	2 Byte	1-2	ALT-T Sampling Mask	0-383

3-3) LFA Block Command

Table 2.2-C15: LFA Block Command

LFA_ON_SET

First Byte	B0	B1	B2	B3	B4	B5	B6	B7	Telemetry Check Item
	LFA	CAL	DCAL	BIAS	CLK	--	--	EMG	
1	ON	ON	ON	ON	PWS	--	--	ON	
0	--	--	--	--	--	--	--	--	

LFA_OFF_SET

First Byte	B0	B1	B2	B3	B4	B5	B6	B7	Telemetry Check Item
	LFA	CAL	DCAL	BIAS	CLK	--	--	EMG	
1	OFF	OFF	OFF	OFF	LFA			OFF	
0	--	--	--	--	--	--	--	--	

LFA_BIAS_SET

First Byte	B0	B1	B2	B3	B4	B5	B6	B7	Telemetry Check Item
	WFCD_BIAS_VOLTAGE_SET								
1	+	0 – $7F_H$							
0	-								

LFA_BANK_SET

First Byte	B0	B1	B2	B3	B4	B5	B6	B7	Telemetry Check Item
	BANK	BANK	BANK	SET	MEMORY_BANK_SET				
1	ENA	CLR	CHK	ALL	0 – F_H				
0	DIS	--	--	ONE					

LFA_ GAIN_SET

First Byte	B0s	B1	B2	B3	B4	B5	B6	B7	Telemetry Check Item
	--	--	WFCD	OFA	WFCM		WFCD	OFA	
1	--	--	SPB	Ex	10:H 01:M		High	High	
0	--	--	DPB	Ey	00:L		Low	Low	

LFA_DSP_SET

First Byte	B0	B1	B2	B3	B4	B5	B6	B7	Telemetry Check Item
	FIFO	ADC	DSP	WDT	RUN	HLD	RST	MCHK	
1	RST	CAL	INT	ENA	RUN	HLD	RST	CHK	
0	--	--	--	DIS	--	--	--	--	

LFA_CAL_SET

First Byte	B0	B1	B2	B3	B4	B5	B6	B7	Telemetry Check Item
	LFA_OFFSET						CAL		
1	OFFSET						10:0dB, 01:-20dB		
0	0 – $3F_H$						00:-40dB		

LFA_OFA_MODE_SET

First Byte	B0	B1	B2	B3	B4	B5	B6	B7	Telemetry Check Item
	SEL	T_MODE		T_FMT		F_MODE	F_FMT		
1	H	0-3		10:peak 01:ave 00:nrm		0-1	10:peak 01:ave 00:nrm		
0	M								

LFA_WFCM_REC

First Byte	B0	B1	B2	B3	B4	B5	B6	B7	Telemetry Check Item
/1/	START_TI_HIGH								
1	(TI : higher 8bit)								
0									
/2/	START_TI_LOW								
1	(TI : lower 8bit)								
0									
/3/	START_BANK				STOP_BAMK				
1	BANK				BANK				
0	$0 - F_H$				$0 - F_H$				

LFA_WFCM_READ_SET

First Byte	B0	B1	B2	B3	B4	B5	B6	B7	Telemetry Check Item
	START_ADR				STOP_ADR				
1	SEGMENT				SEGMENT				
0	$0 - F_H$				$0 - F_H$				

*00: LFA_RD_SET_START *FF: LFA_RD_SET_END

LFA_CMPR_SET

First Byte	B0	B1	B2	B3	B4	B5	B6	B7	Telemetry Check Item
	M_CDC	L_CDC	L_EL	L_EL_EMG	---	---	---	---	
1	ON	ON	AVE	AVE	---	---	---	---	
0	OFF	OFF	LPF	LPF	---	---	---	---	

LFA_AGC_SET

First Byte	B0	B1	B2	B3	B4	B5	B6	B7	Telemetry Check Item
/1/	AGC	SEL		LFA_AGC_TIME					
1	ENA	00:H, 10:M(HM)		TIME					
0	DIS	01:M(ML), 11:L		$0 - F_H$					
/2/	LFA_AGC_HL_CONTROL			LFA_AGC_HL_THRESHOLD					
1	CONTROL(H->L)			THRESHOLD(H->L)					
0	$0 - F_H$			$0 - F_H$					
/3/	LFA_AGC_LH_CONTROL			LFA_AGC_LH_THRESHOLD					
1	CONTROL(L->H)			THRESHOLD(L->H)					
0	$0 - F_H$			$0 - F_H$					

LFA_OBS_SET

First Byte	B0	B1	B2	B3	B4	B5	B6	B7	Telemetry Check Item
	OBS_MODE_SET								
1	00/01:CHG_DP/SP 10/11:NOMINAL_DP/SP 20:AUTO_CAL								
0	30/31:OFA_EY/EX 40/41:HGAIN_L/H 50/51/52:MGAIN_L/M/H 60/61:L_GAIN_L/H 70/71:WFCD_DPB/SPB 81/82/84/88:OFA_SW_1/2/4/8KHZ 90:RESUME A0:CDC_INIT								

LFA_WFCH_REC

First Byte	B0	B1	B2	B3	B4	B5	B6	B7	Telemetry Check Item
/1/	START_TI_HIGH								
1	(TI : higher 8bit)								
0									
/2/	START_TI_LOW								
1	(TI : lower 8bit)								
0									
/3/	E_THRESHOLD								
1	THRESHOLD								
0	0 – FF_H								

*000000: LFA_WFC_REC_ST

3-4) WANT Block Command

Table 2.2-C16: WANT Block Command

WANT_ON_SET

XY:C0		B0	B1	B2	B3	B4	B5	B6	B7
		STBY	ANT	MONI	LIM	SEL1	SEL2	SEL3	SEL4
	1	ON	EXT	ON	ENA	ON	ON	ON	ON
	0								

WANT_OFF_SET

XY:C2		B0	B1	B2	B3	B4	B5	B6	B7
		STBY	ANT	MONI	LIM	SEL1	SEL2	SEL3	SEL4
	1	OFF	RET	OFF	DIS	OFF	OFF	OFF	OFF
	0								

2.2.5.2 PWA Status Telemetry

1) Analog HK in the HK Packet

Table 2.2-T1 Analog HK Allocation

PIM (Hex)	Word	Name	Function	Unit	Range	Convert
8010	357	LFA_E_T	LFA DSP Temperature	℃	-50 - +80	0.51 x -50
8011	358	PWS_RX1_T	PWS RX RF Amp Temperature	℃	-50 - +80	0.51 x -50
8012	359	PWS_PAMP1_T	PWS Power TR Temperature	℃	-50 - +80	0.51 x -50
8013	360	PWS_DCDC+45V	PWS DC/DC Voltage	V	0 - +60	0.24 x
8014	361	PWS_DCDC_T	PWS DC/DC Temperature	℃	-50 - +80	0.51 x -50
8015	362	PWS_LOCAL_T	PWS DDS Temperature	℃	-50 - +80	0.51 x -50
8016	363	PWS_RX2_T	PWS Log Amp Temperature	℃	-50 - +80	0.51 x -50
8017	364	PWS_PAMP2_T	PWS Power Amp HIC Temperature	℃	-50 - +80	0.51 x -50
8018	365	WNT1_T	WANT1 Temperature	℃	-50 - +80	0.51 x -50
8019	366	WNT2_T	WANT2 Temperature	℃	-50 - +80	0.51 x -50
801A	367	WNT3_T	WANT3 Temperature	℃	-50 - +80	0.51 x -50
801B	368	WNT4_T	WANT4 Temperature	℃	-50 - +80	0.51 x -50
801C	369	+5V	PWA +5V Voltage	V	0 - +8	0.03125 x
801D	370	+12V	PWA +12V Voltage	V	0 - +15	0.0586 x
801E	371	-12V	PWA -12V Voltage	V	0 - -15	-0.0586 x
801F	372	+29V	PWA +29 Voltage	V	0 - +35	0.137 x

2) Status Data in the HK Packet

Table 2.2-T3: HK Status Data

PIM (Hex)	Word	Bit	Name	Function	W147 B6	W144 B6-7
	W0	B0-7	Packet ID	01H: HK Packet	*	*
8000	W132	B0	ECC_2BIT_ERR	1:Act,0:Non	*	*
		B1	ECC_1BIT_ERR	1:Act,0:Non	*	*
		B2	ECC_ENA/DIS	1:Enable,0:Disable	*	*
		B3	HTR_ENA/DIS	1:Enable,0:Disable	*	*
		B4	WDT_ERR	1:Act,0:Non	*	*
		B5	WDT_ENA/DIS	1:Enable,0:Disable	*	*
		B6	CPU_RUN/RST	1:Run,0:Reset	*	*
		B7	CPU_ON/OFF	1:On,0:Off	*	*
F800	W133	B0-7	WNT1_LEN_MONI	0.102 x [m]	0	*
F801	W134	B0-7	WNT2_LEN_MONI	0.102 x [m]	0	*
F802	W135	B0-7	WNT3_LEN_MONI	0.102 x [m]	0	*
F803	W136	B0-7	WNT4_LEN_MONI	0.102 x [m]	0	*
F804	W137	B0-7	WNT1_VIB_EL	+4-0.0314 x [degree]	0	*
F805	W138	B0-7	WNT1_VIB_AZ	-4+0.0314 x [degree]	0	*
F806	W139	B0-7	WNT2_VIB_EL	+4-0.0314 x [degree]	0	*
F807	W140	B0-7	WNT2_VIB_AZ	-4+0.0314 x [degree]	0	*
F808	W141	B0-7	WNT3_VIB_EL	+4-0.0314 x [degree]	0	*
F809	W142	B0-7	WNT3_VIB_AZ	-4+0.0314 x [degree]	0	*
F80A	W143	B0-7	WNT4_VIB_EL	+4-0.0314 x [degree]	0	*
F80B	W144	B0-7	WNT4_VIB_AZ	-4+0.0314 x [degree]	0	*
F800	W133	B1	LFA_CAL_ON/OFF	1:On,0:Off	1	*
		B2	LFA_BIAS_ON/OFF	1:On,0:Off	1	*
		B3	LFA_OFA_GAIN	1:H,0:L	1	*
		B4	LFA_WFCD_GAIN	1:H,0:L	1	*
		B5-6	LFA_WFCM_GAIN	3:H,2:M,1:L	1	*
		B7	LFA_OFA_ANT	1:Ex,0:Ey	1	*
F801	W134	B0	LFA_DSP_ON/OFF	1:On,0:Off	1	*
		B1-2	LFA_DSP_STATUS	0:Run,1:Hold,2:Reset,3:R/H	1	*
		B3	LFA_WDT_ENA/DIS	1:Enable,0:Disable	1	*
		B4	LFA_WDT_ERR/NML	1:Error,0:Normal	1	*
		B5	LFA_FIFO_FL/NML	1:Full,0:Normal	1	*
		B6	LFA_FIFO_EM/NML	1:Empty,0:Normal	1	*
		B7	LFA_FIFO_HF/NML	1:Half-Full,0:Normal	1	*
F802	W135	B0	LFA_WFCD_CAL	1:On,0:Off	1	*
		B1	LFA_ADC_CLK	1:LFA,0:PWS	1	*
		B2-3	LFA_WFCM_STATUS	0:Stop,1:REP,2:REC,3:REC/REP	1	*
		B4-7	LFA_BANK_SET	0-15	1	*
F803	w136	B0-1	LFA_CAL_LEV_SET	0:-40,1:-20,2:0	1	*
		B2	LFA_WFCD_SP/DP	1:Single Probe,0:Double Probe	1	*
		B3	LFA_EMG	1:Enable,0:Disable	1	*
		B4-5	LFA_DSP_MEM_ST	0:Normal,1:Error,2:Check	1	*
				3:Check/Error	1	*
		B7	LFA_WFCH_STATUS	1:REC,2:Stop	1	*

F804	W137	B0-7	LFA_OBS_MODE	00_H:Manual	1	*
				10_H:Nominal Double Probe	1	*
				20_H:Nominal Single Probe	1	*
				30_H: Automatic Calibration	1	*
F805	W138	B0-7	LFA_BIAS_SET	00_H-FF_H	1	*

F806	W139	B0	HTR_ON/OFF	1:On,0:Off	1	0
		B1	HTR_CONT_ON/OFF	1:On,0:Off	1	0
		B2-3	PWS_RX_GAIN	1:L,2:M,3:H	1	0
		B4	PWS_RX_ANT	1:Reverse,0:Normal	1	0
		B5-7	PWS_RX_FIX/SWP	1:Fix,0:Sweep	1	0
F807	W140	B0	PWS_PAMP_H/L	1:H,0:L	1	0
		B1	PWS_DCDC_ON/OFF	1:On,0:Off	1	0
		B2	PWS_CB1_ON/OFF	1:On,0:Off	1	0
		B3	PWS_CB2_ON/OFF	1:On,0:Off	1	0
		B4	PWS_CB3_ON/OFF	1:On,0:Off	1	0
		B5	PWS_CB4_ON/OFF	1:On,0:Off	1	0
		B6	PWS_LOAD_ON/OFF	1:On,0:Off	1	0
		B7	PWS_CENT_ON/OFF	1:On,0:Off	1	0
F808	W141	B0	PWS_CAL13	1:On,0:Off	1	0
		B1	PWS_CAL24	1:On,0:Off	1	0
		B2	PWS_GCAL_ON/OFF	1:On,0:Off	1	0
		B3	PWS_LCAL_ON/OFF	1:On,0:Off	1	0
		B4	PWS_PCAL_ON/OFF	1:On,0:Off	1	0
		B5	PWS_SCAL_ON/OFF	1:On,0:Off	1	0
		B6	PWS_NCAL_ON/OFF	1:On,0:Off	1	0
		B7	PWS_ACAL_ON/OFF	1:On,0:Off	1	0
F809	W142	B0-2	PWS_FIFO	0:Normal,1:Empty,2:Half Full,6:Full	1	0
		B3	PWS_DET_BND	1:Wide,0:Narrow	1	0
		B4	PWS_FIL_BND	1:Wide,0:Narrow	1	0
		B5	PWS_RF_DIV	1:On,0:Off	1	0
		B6	PWS_NEI_SIG	1:On,0:Off	1	0
		B7	PWS_POL_SIG	1:On,0:Off	1	0
F80A	W143	B1	PWS_NEI_PWR	1:On,0:Off	1	0
		B2	PWS_TXL_PWR	1:On,0:Off	1	0
		B3	PWS_W4_NEI	1:On,0:Off	1	0
		B4	PWS_W4_SPW	1:On,0:Off	1	0
		B5	PWS_W3_SPW	1:On,0:Off	1	0
		B6	PWS_W2_SPW	1:On,0:Off	1	0
		B7	PWS_W1_SPW	1:On,0:Off	1	0

F806	W139	B0-7	PWS_LOCAL	00_H-FF_H	1	1
F807	W140	B0-7	PWS_TX_STRT_PC	00_H-FF_H (PC/32)	1	1
F808	W141	B0-7	PWS_TX_STOP_PC	00_H-FF_H (PC/32)	1	1
F809	W142	B0-7	PWS_MENU	Table 2.2-C9	1	1
F80A	W143	B0-7	PWS_MODE	Table 2.2-C8	1	1

F806	W139	B0-7	PWS_CB1_MONI	0.334 x [V]	1	2
F807	W140	B0-7	PWS_CB2_MONI	0.334 x [V]	1	2
F808	W141	B0-7	PWS_CB3_MONI	0.334 x [V]	1	2
F809	W142	B0-7	PWS_CB4_MONI	0.334 x [V]	1	2

F80A	W143	B0-7	PWS_PWR_MONI	1.023 x [V]	1	2

F80B	W144	B1	WNT_PRE_ON/OFF	1:On,0:Off	1	*
		B2-3	PAC_FRM	0:Null,1:PWS,2:LFA,3:WFCM	1	*
		B4	PWS_PAMP_ON/OFF	1:On,0:Off	1	*
		B5	PWS_TX_ANT	1:Reverse,0:Normal	1	*
		B6-7	EDIT_NO	0-2	1	*

F80C	W145	B0	WNT_STBY_ON/OFF	1:On,0:Off	*	*
		B1	WNT_ANT_EXT/RET	1:Extention,0:Retraction	*	*
		B2	WNT_MONI_ON/OFF	1:On,0:Off	*	*
		B3	WNT_LIM_ENA/DIS	1:Enable,0:Disable	*	*
		B4	WNT1_SEL_ON/OFF	1:On,0:Off	*	*
		B5	WNT2_SEL_ON/OFF	1:On,0:Off	*	*
		B6	WNT3_SEL_ON/OFF	1:On,0:Off	*	*
		B7	WNT4_SEL_ON/OFF	1:On,0:Off	*	*
F80D	W146	B0	WNT1_EXT_FL/NOT	1:Full,0:Not-Full	*	*
		B1	WNT1_RET_FL/NOT	1:Full,0:Not-Full	*	*
		B2	WNT2_EXT_FL/NOT	1:Full,0:Not-Full	*	*
		B3	WNT2_RET_FL/NOT	1:Full,0:Not-Full	*	*
		B4	WNT3_EXT_FL/NOT	1:Full,0:Not-Full	*	*
		B5	WNT3_RET_FL/NOT	1:Full,0:Not-Full	*	*
		B6	WNT4_EXT_FL/NOT	1:Full,0:Not-Full	*	*
		B7	WNT4_RET_FL/NOT	1:Full,0:Not-Full	*	*
F80E	W147	B0	WNT_DRV_ON/OFF	1:On,0:Off	*	*
		B1	WNT_PRG_ENA/DIS	1:Enable,0:Disable	*	*
		B2	PWS_ON/OFF	1:On,0:Off	*	*
		B3	LFA_ON/OFF	1:On,0:Off	*	*
		B4	UVC_L1_ON/OFF	1:On,0:Off	*	*
		B5	PROG_OBS/WNT	1:OBS,0:WANT	*	*
		B6	EDIT_OBS/WNT	1:OBS,0:WANT	*	*
		B7	OTC_ON/OFF	1:On,0:Off	*	*

3) Status Data in PWA Mission Packet

Word	Bit	Item	Function	W4 B5-7
W0	B0-7	PACKET_ID	12H: PWA Mission Packet	*
W4	B0-7	PAC_NO	Packet Number	*
W5	B1	TI_CHECK	0:Valid,1:Invalid	*
W6-8	B0-23	PAC_TI	Packet TI	*
W9-10	B0-15	PAC_PC	Packet PC	*
W11	B0-3	PAC_TLM_FRM	Telemetry Format on MCRP	*
W11	B4-7	PAC_EDIT_RATE	Edit Rate on MCRP	*

W12	B0-8	WNT1_VIB_EL/O	WANT1 Monitor in OBS Mode	3
W13	B0-8	WNT1_VIB_AZ/O	WANT1 Monitor in OBS Mode	3
W14	B0-8	WNT2_VIB_EL/O	WANT2 Monitor in OBS Mode	3
W15	B0-8	WNT2_VIB_AZ/O	WANT2 Monitor in OBS Mode	3
W16	B0-8	WNT3_VIB_EL/O	WANT3 Monitor in OBS Mode	3
W17	B0-8	WNT3_VIB_AZ/O	WANT3 Monitor in OBS Mode	3
W18	B0-8	WNT4_VIB_EL/O	WANT4 Monitor in OBS Mode	3
W19	B0-8	WNT4_VIB_AZ/O	WANT4 Monitor in OBS Mode	3

W12-13	B0-15	ECC_ERR_NUM	ECC 1bit Error Counter	6
W14-15	B0-23	ECC_ERR_ADR	ECC 1bit Error Address	6
W17-19	B0-23	ECC_CHK_ADR	Memory Patrolling Address	6

W12-13	B0-15	COM_STORE_PT	Command Store Pointer	7
W14-14	B0-15	COM_EXEC_PT	Command Execution Pointer	7
W16-17	B0-15	DATA_WRITE_PT	Data Write Pointer	7
W18-19	B0-15	DATA_READ_PT	Data Read Pointer	7
W433	B0-7	VCOM_COUNT	Valid Command Counter (*)	7
W434	B0-7	ICOM_COUNT	Invalid Command Counter (*)	7
W435	B0-7	LOOP_TIME	Loop Time Counter [msec] (*)	7

(*) Not Available in Packet Format WFCM (HK Packet,W144,B2-3)

4) PWA Mission Packet in Emergency Mode

When Non Maskable Interrupt (NMI) occures due to software or hardware errors, CPU program stops giving WDT error or ECC error status. In this case, the software program of PWA backbone routine makes the emergency mode packet edition and transmit following items in the PWA mission packets.

NMI Packet Allocation

Word	Size [Byte]	Item
W0	1	PWA Packet ID (12_H)
W4	2	NMI Packet ID ($FFFF_H$)
W6	30	CPU Registers
W36	64	Common Variables
(W68)	(2)	(ECC Error Count)
(W70)	(3)	(ECC Error Address)
W100	32	LFA Variables
W132	32	PWS Variables
W164	256	History

History Code

Code (Hex)	Category
00-0F	Main Loop
10-3F	Common Routine
40-4F	LFA Command Routine
50-5F	LFA Initialize Routine
60-7F	LFA Edit Routine
80-8F	PWS Command Routine
90-9F	PWS Initialize Routine
A0-BF	PWS Edit Routine
F0-FE	Interrupt Routine
FF	NMI Routine(History End)

2.2.6 EMI Requirements to Other Subsystems of the PLANET-B Spacecraft

It is expected that a variety of natural waves exist in the vicinity of Mars. The main subject of the PWA is to investigate the wave phenomena and their relation with the electromagnetic dynamics of the Martian ionosphere and magnetosphere. The intensity of the natural noise, however, ranges from very weak level to moderately intense level. Therefore, interference noise generated in various subsystems onboard the spacecraft may bring a fatal damage to the plasma wave investigations. The WANT elements have been designed to be kept away from the possible noise source and the PWA receiver circuit is shielded electrostatically as much as possible.

In order to reduce the effects of the noise interference, it is required to suppress the noise current on the power lines below the specified level and to devise not to radiate electromagnetic noise from the harness cables. After the consensus on the reduction of the noise generation in the PLANET-B spacecraft has been approved by the project, we require the all instruments onboard the spacecraft keep the following "The electromagnetic compatibility specifications":

Electromagnetic compatibility
PLANET-B CE01/03 : Power line noise
following the GEOTAIL EMC criterion of GEOTAIL CE01/03
PLANET-B RE02 : EM radiation
PSU (power supply unit) : regulation of ripple and noise levels.

2.3 MGF/PET/MST/UVS (MPM)

MPM consists of 4 components; Magnetic Field Experiment (MGF), Probe for Electron Temperature (PET), Ultraviolet Imaging Spectrometer (UVS), and Extendible Mast (MST).

Magnetic Field Experiment (MGF)

Principal Investigator :	Tatsundo Yamamoto	ISAS (deceased)
	Ayako Matsuoka	ISAS
Co-Investigator :	Ryoichi Fujii	STE Laboratory, Nagoya University
	Susumu Kokubun	STE Laboratory, Nagoya University
	Masaru Kono	University of Tokyo
	Fumio Tohyama	Tokai University
	Yutaka Tonegawa	Tokai University
	Mario H. Acuña	NASA/GSFC
Manufacturer :	Meisei Electric Co., Ltd.	

Probe for Electron Temperature (PET)

Principal Investigator :	Koichiro Oyama	ISAS
Co-Investigator :	Takumi Abe	Aoyama Gakuin University
	Katsuhisa Marubashi	CRL
	Tadanori Takahashi	Gunma University
	Hiroyuki Shinagawa	STE Laboratory, Nagoya University
	Andrew F. Nagy	Atmos. Ocean & Space Sci., University of Michigan
	Kristian Schlegel	Max-Planck Institute for Aeronomy
	Jhoon Kim	Korean Aerospce Research Institute
Manufacturer :	Meisei Electric Co., Ltd.	
	Meiwa System Co.	

Ultraviolet Imaging Spectrometer (UVS)

Principal Investigator :	Hiroshi Fukunishi	Tohoku University
Co-Investigator :	Shoichi Okano	National Institute of Polar Research
	Makoto Taguchi	National Institute of Polar Research
	Katsuhisa Suzuki	Yokohama National University
	Shigeto Watanabe	Hokkaido University
	Yukihiro Takahashi	Tohoku University
Manufacturer :	Toshiba Corp.	
	Hamamatsu Photonics K.K.	

Extendible Mast (MST)

	M.C.Natori and K.Higuchi	ISAS
Manufacturer :	Japan Aircraft Manufacturing Co.,Ltd.	

2.3.1 Observation Objectives

2.3.1.1 Magnetic Field Measurement (MGF)

The primary scientific missions of PLANET-B aim at the understanding of the Martian upper atmosphere environment and its interaction with the solar wind. The magnetic field team will contribute to the mission by measuring magnetic field variations in the frequency range below 10 Hz, using a fluxgate magnetometer. The major scientific objectives for MGF experiment are as follows:

Intrinsic / Residual Magnetic Field

The magnitude of the Martian intrinsic magnetic field is still unknown. In 1997 it was reported that the magnetic field is likely of crustal rather than dynamo origin based on the Mars Global Surveyor data. The field varying in strength in different locations, and anomalous magnetic field up to 400 nT were observed.

The determination of the magnetic moment is one of the most important objectives in the PLANET-B mission. It would absolutely relate to the fundamental features in the interaction between the solar wind - the Martian ionosphere. It also gives us important information on the Martian internal structures. Residual magnetic field is an interesting issue. Magnetic field variations along the spacecraft orbit near the periapsis could give us some information on magnetic environment in the past, in conjunction with corresponding surface images from the MIC instrument.

Magnetic Field in the Ionosphere

Penetration of solar wind magnetic field into the Martian upper atmosphere is one of the major objectives in the PLANET-B mission. Because of the highly collisional media of the Martian ionosphere, magnetic field diffusion could take an essential role in the interaction processes between the solar wind and the Martian ionosphere. The shielding effect due to induced magnetic field is also important in global pressure balance. Field-aligned current that connects ionospheric current would contribute to the energy transfer from the solar wind into the Martian ionosphere.

Magnetic Field in the Solar Wind

During the high-altitude traverse in the dayside region, measurements of the solar wind magnetic field is very important. Close to the Martian ionosphere, the direct interaction with Martian upper atmosphere could be significant and the role of magnetic field of solar wind origin will be investigated, that relates to the mass loading effect. Towards higher altitude, the bow shock configuration will be obtained, which gives us some information on the Martian intrinsic magnetic field. The comparison of its shape and location, in conjunction with the upstream wave activities, to those in the Earth's environment is also important, because of relatively larger gyro-radius of charged particles.

Magnetic Field in the Tail Region

Magnetic field behind Mars takes a configuration of the tail due to trapping or draping effect. Relationship to the acceleration mechanism for charged particles are investigated.

2.3.1.2 Probe for Electron Temperature (PET)

To date only two height profiles of electron temperature of the Mars ionosphere exist; they were derived from the electron energy spectra measured with a retarding potential analyzer onboard the Viking landers (Hanson and Mantas, 1988). This extremely limited data base means that we know very little about the energetics of the Martian ionosphere. Therefore we believe that the successful measurement of the electron temperature variation in the ionosphere of

the Mars will significantly enhance our understanding of not only on the energetics, but also on the dynamics of the Mars plasma environment.

One of the important studies at Mars involves the nature and/or existence of an ionopause. Dayside electron density profiles obtained in situ with Pioneer Venus orbiter, as well as radio occultation methods starting with Mariner 5, usually show a distinct ionopause at Venus. On the other hand, none of the radio occultation measurements at Mars obtained with Viking 1 and 2 and Mariners 4, 6, 7 and 9 have ever revealed a credible pressure balance at the ionopause (Zhang et al., 1990). Thus there is apparently a real difference in the solar wind interaction processes at the two planets. Hanson and Mantas (1988) concluded from the Viking Lander data that the sum of all the measured partial plasma pressures is insufficient to balance the measured electron pressure near 1000 km altitude by a factor of the order of 4. If the ionopause at Mars is at a high altitude ($\geqq$1000 km) the electron temperature should be of the order of $\sim$12,000 K in order to balance the solar wind without an intrinsic magnetic field. The apparently missing ionopause at Mars might be due to the presence of a weak intrinsic magnetic field. Electron temperature obtained by means of our probe and electron densities obtained from plasma wave measurements can help in elucidating these issues concerning the plasma pressure.

Hanson and Mantas (1988) derived the pressures of three electron groups with different temperatures using a sophisticated analysis of the data obtained with Viking 2 retarding potential analyzer. The possibility exists that the division of the electrons into three groups might be inappropriate and just simply the result of the analysis process of the electron energy spectra. Our probe can tell whether the plasma has a high energy tail or not, and whether the electrons are Maxwellian or not.

The third research topic to be pursued is a study to establish whether ionospheric "holes" are present at Mars, similar to the ones found in the Venus ionosphere. The possibility exists that these holes may not be present in Mars ionosphere, because the fluctuating magnetic field cannot penetrate into the ionosphere under the weak intrinsic magnetic field of Mars. In a recent paper Cole (1994) suggests that flux ropes are is not produced at the ionopause of Venus and convected to their place of observation, thus providing evidence against the suggestion that they are caused by Kelvin-Helmholtz instability at the ionopause. Thus the formation mechanism of the hole in the Venus ionosphere, where the energy densities of the magnetic field and plasma are believed to be in balance, is still controversial. Observation of T_e, both inside and outside of the hole by our probe, if it exists at Mars, surely offers a chance to understand this problem better.

Theoretical calculations have shown that in order to account for the observed electron temperatures at both Venus and Mars either the heat conduction has to be decreased and/or an extra energy source, beyond EUV heating, needs to be assumed (Kim, 1997). The use of the expression for thermal conductivity, appropriate for a fully ionized gas appears to be inappropriate for model calculations. The fluctuation of the magnetic field in the Mars ionosphere and/or the presence of a horizontal magnetic field can reduce the heat conduction (Hoegy et al., 1990; Cravens et al., 1983). The appropriateness of such modified thermal conductivity can be studied using d.c. and fluctuating magnetic fields which will be observed by the magnetometer and the wave receiver.

The overall thermal structure of Martian ionosphere will be characterized by the continuous observation of electron temperatures. We will group the data obtained into season, longitude, latitude, and local time at different heights. The deviation of T_e from the mean value which might be found during sand storms can thus be isolated and studied in order to establish the relevant processes.

The ionosphere of Mars has never before been studied in a comprehensive and systematic manner, as will be done by Planet-B. The data which will be returned by the PET instrument will be a major component of the expected data set, that will help to lead us to a major advance in our understanding of the physical and chemical processes controlling the ionosphere of Mars.

2.3.1.3 Ultraviolet Imaging Spectrometer (UVS)

The ultraviolet imaging spectrometer with a D/H absorption cell photometer (UVS) covers the FUV and MUV region from 115 to 310 nm. The major scientific objectives are : (1) to study the interaction processes between the Martian upper atmosphere and the solar wind from observations of hydrogen and oxygen corona around Mars, (2) to study the escape processes and the evolution of the Martian atmosphere from D/H ratio observations, (3) to study the dynamical processes in the Martian ionosphere and thermosphere from observations of dayglow emissions such as CO Cameron band (180-200 nm), CO_2^+ doublet and OI 297.2 nm emission lines, (4) to discover auroral phenomena in the nightside disk, and (5) to study the dynamical and mass transport processes in the Martian lower atmosphere from observations of dust storms, polar caps and ozone distributions in the dayside disk.

2.3.2 Instrument Specifications

2.3.2.1 Magnetic Field Measurement (MGF)

The subsystem for magnetic field measurements (MGF) consists of three-axis fluxgate magnetometer sensor, cables and electronics. The functional block diagram of the system is shown in Figure 2.3.2.1. The MGF subsystem is composed of two components; MGF-S and MGF-E. The latter component is installed in MPM-E, and shared with PET-E.

Triad fluxgate sensor, which utilizes a ring core geometry, is installed at the end of a 5-m deployable mast. The sensor-electronics system is designed to be similar to those used in successful AKEBONO and GEOTAIL missions. Special effort is made to reduce the total weight of the system, mainly by introducing the HIC technology to the analog electronics component. The analog part of MGF instrument is of standard design and consists of amplifier, filter, phase sensitive detector, integrator and voltage-current converter.

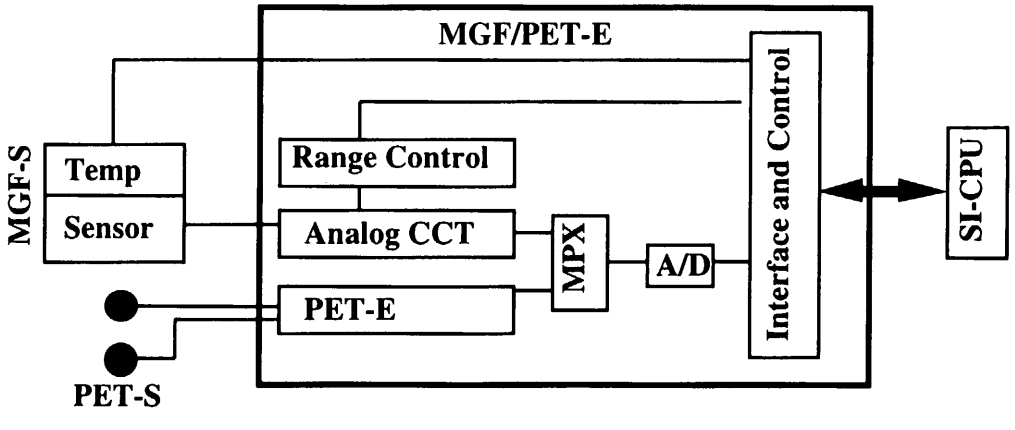

Figure 2.3.2.1. Functional Block Diagram of MGF

The sampling for the magnetic field data is synchronized with the spacecraft spin, and its rate is 256 vectors every spin (about 32 vectors / second). Sampled data are edited according to the spacecraft edition mode and bit rate, and sent to the Data Handling Unit of the spacecraft through PIM for telemetry. Specifications of the MGF instrument are summarized in Table 2.3.2.1.

Table 2.3.2.1. Specifications of the MGF instrument

Sensor	Ring core geometry, three-components (X,Y,Z)
Drive frequency	15.018 kHz
Dynamic ranges	±16 nT | ±256 nT | ±1024 nT | ±65536 nT
Quantitative steps	0.002 nT| 0.031 nT| 0.125 nT | 8 nT (14 bit resolution)
Sampling rates	256 vectors / spin

2.3.2.2 Probe for Electron Temperature (PET)

When an electrode is immersed in a plasma, characterized by a single electron temperature, the probe current, expressed in terms of the probe voltage V with respect to the plasma potential in the electron retarding regime, is given as:

$$I = i_e \ exp(eV/kT_e) - i_i \qquad (1)$$

where $i_e = S_e N_e \sqrt{\kappa Te/2\pi m_e}$ and $i_i = S_i \cdot N_i \cdot e \cdot V_S$

In the above equation, S_e, N_e and T_e are the electron collecting area, electron density and electron temperature respectively. k, m_e, and e are Boltzmann's constant, electron mass and electron charge. The ion current, i_i, is independent of the probe voltage in the case satellite measurements, because the satellite velocity V_S is much higher than the ion thermal velocity V_{th}. S_i is the ion collecting area.

When a small sinusoidal wave of amplitude a is superposed onto the sweep voltage, the V-I characteristic curve shifts as shown in Figure 2.3.2.2a and the shifted V-I relationship is written as:

$$I = i_e \cdot I_0(ea/kT_e) \ exp\,(eV/kT_e) - i_i \qquad (2)$$

where $I_0(X)$ is the modified Bessel function of the zeroth order with argument X. The floating potential at which the probe current is zero can be expressed as

$$V_{fa1} = kT_e/e \cdot \ ln\,[i_i/i_e \cdot \ I_0(ea/kT_e)] \qquad (3)$$

On the other hand, the floating potential without a sinusoidal wave:

$$V_f = kT_e/e \cdot \ ln\,[i_i/i_e] \qquad (4)$$

The shift of the floating potential from the original potential is obtained by subtracting Eq. (4) from Eq. (3)

$$V_{fa1} - V_f = -kT_e/e \cdot \ ln\,[I_0(ea/kT_e)] \qquad (5)$$

When a sinusoidal wave of the amplitude $2a$ is applied to the elect rode, the floating potential shift can be written as

$$V_{fa2} - V_f = -kT_e/e \cdot \ ln\,[I_0(2ea/kT_e)] \qquad (6)$$

The electron temperature is obtained from the individual floating potential shifts when sinusoidal waves of the amplitude a and $2a$ are successively applied. The first electron temperature T_{e1} and the second electron temperature T_{e2} are calculated from the equations (5) and (6), because $V_{fa1}-V_f$ and $V_{fa2}-V_f$ are measured and k, e and a are known. If we take the ratio of the two floating potential shifts which are expressed by the equations (5) and (6), the ratio R can be written as

$$R = ln\ [I_0(2ea\ /kT_e)]\ /\ ln\ [I_0(ea\ /kT_e)] \qquad (7)$$

Equation (7) gives the 3rd electron temperature T_{e3}, because e, k and a are known and R can be calculated from the potential shifts. When the electrons in the plasma are Maxwellian, the three electron temperatures T_{e1}, T_{e2}, and T_{e3} should be the same. If all these electron temperatures differ from one another, it can be inferred that electrons in the plasma have either a high energy tail or are characterized by different temperatures.

Based on this principle, we designed our experiment for PLANET-B. The basic circuit is shown in Figure 2.3.2.2b. The sinusoidal waves of amplitudes a and $2a$, and of frequency, f are fed to an electrode through a small capacitor C_1. The impedance of the feeding capacitance, $1/2\pi fC_1$ should be low enough to neglect the impedance of the sheath formed around the electrode. The capacitance is calculated to be 2000 pF for the Mars ionosphere. A sinusoidal wave, whose amplitude is changed successively from 500 mV, 250 mV, to 0 mV respectively is applied to the sensor electrode (denoted as S). The duration of these three amplitudes are 125 ms., 125 ms. and 250 ms. respectively for PLANET-B. The frequency f of the sinusoidal wave is chosen to be 28

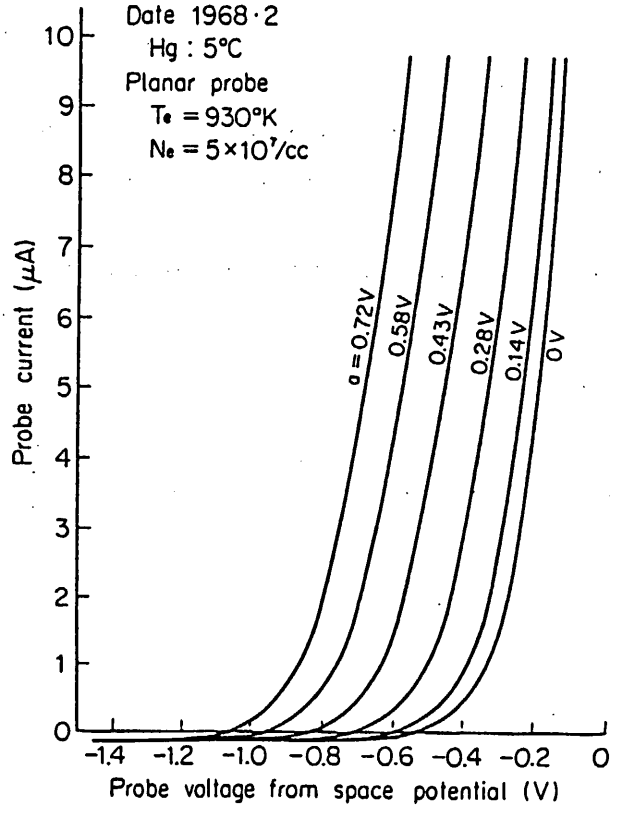

Fig. 2.3.2.2*a*. Principle of the electron temperature measurement conducted by using laboratory plasma; note the shift of the *V–I* characteristic curve caused by the application of sinusoidal signal

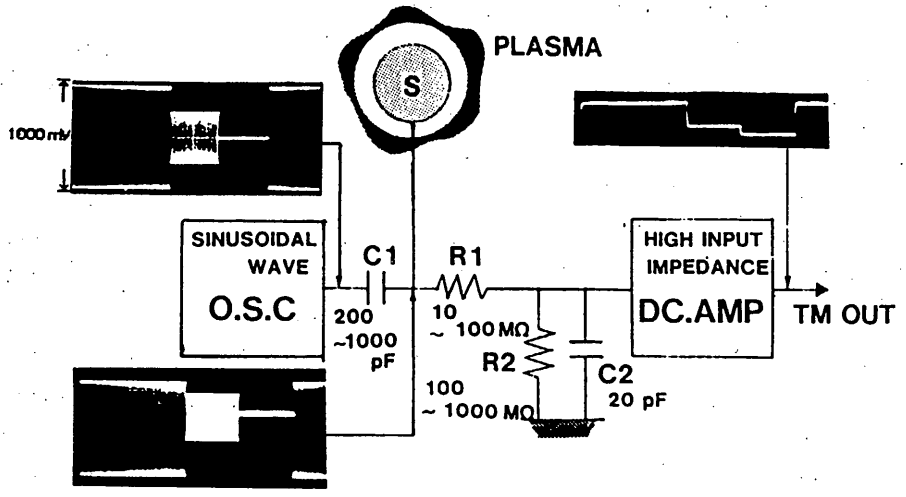

Fig.2.3.2.2*b*. Basic electronic circuit of the electron temperature probe. The output signal consists of three levels (high, middle and low) corresponding to the sinusoidal wave of three different amplitudes (500 mV, 250 mV and 0 V).

kHz in order to avoid possible interference with other scientific instruments such as the magnetometer and the VLF receiver. A Colpitz type oscillator, whose original frequency is 7.168 Mhz, is used and the original frequency is down converted to the frequency of 28 Khz. Variation of the amplitude is within 1% within the temperature range of –40° to 50°. The distortion factor of the sinusoidal signal is 1%. The electrode is automatically biased at a floating potential through a high input resistor. The floating potential in the sensor electrode consists of contributions from the floating potential shifts due to the application of the sinusoidal wave and from the original potential. For the actual circuit, another semicircular electrode is attached to detect an original potential, and the signals from these two electrodes are fed to the differential amplifier. The gain of the amplifier is 6.8. The final output voltage from the amplifier is a floating potential shift generated solely as a result of the application of a sinusoidal wave to the sensor electrode *S*. The wave signal which is applied to the electrode and the wave forms observed at three main points of the electron temperature probe are also shown in Figure 2.3.2.2b. The lower limit of electron density under which PET can get reliable value is 103 els/cc. Accordingly, nighttime measurements at Mars are limited to the heights from 150–200 km for the worst case scenario.

Two circular electrodes of diameter 150 mm are mounted at the ends of the solar cell panels. Electronics of the PET is accommodated in one box together with those of magnetometer, and a UV imager, in order to minimize the total weight of the spacecraft. Electric power for the PET will be supplied through the magnetometer and the power is switched on /off simultaneously with the magnetometer.

Similar type of instruments, based on the same measurement principle as described above, have been flown in Japan, as well as in foreign countries for many sounding rocket experiments. They have has been flown on five Japanese scientific satellites and the results obtained from these long term experiments confirmed the high reliability and stable performance (Oyama, 1991).

2.3.2.3 Ultraviolet Imaging Spectrometer (UVS)

The ultraviolet imaging spectrometer is composed of two sensors, a grating spectrometer (UVS-G) and a D/H absorption cell photometer (UVS-P). The UVS-G is a flat-field type spectrometer operating in the ultraviolet region between 115 nm and 310 nm with a spectral resolution of 2-3 nm. The optics of UVS-G consists of an off-axis parabolic mirror, a slit, a concave grating and small folding mirrors. The detector covering the FUV region from 115 to 200 nm is a micro-channel plate (MCP) with strip anodes, while the detector covering the MUV region from 200 to 310 nm is a MOS linear image sensor (LIS). The UVS-P is a photometer capable of separately detecting hydrogen (H) and deuterium (D) Lyman α emissions with an absorption cell technique. Note that the center wavelengths of H and D Lyman α emissions, 121.566 nm and 121.533 nm respectively, are so close each other that small spectrometers like the UVS-G can not resolve the H and D Lyman α emissions. The H and D absorption cells contain hydrogen and deuterium molecule gases, respectively, and filaments are equipped inside the cells. When the filament in the cell is turned on, the hydrogen or deuterium molecules thermally dissociate into atoms which absorb H or D Lyman α incident into the field-of-view of the photometer. The absorption cell can be regarded as a very narrow band rejection filter with a center wavelength equal to the rest wavelength of Lyman α and a variable HWHM of 0.001-0.002 nm. By switching on the filaments in the H and D cells alternately, the intensities of H and D Lyman α emissions can be measured separately.

Although the instantaneous field-of-views of UVS-G and UVS-P contain no spatial information, mapping of emissions is accomplished by using the spin and orbital motion of spacecraft as shown in Figure 2.3.2.3a.

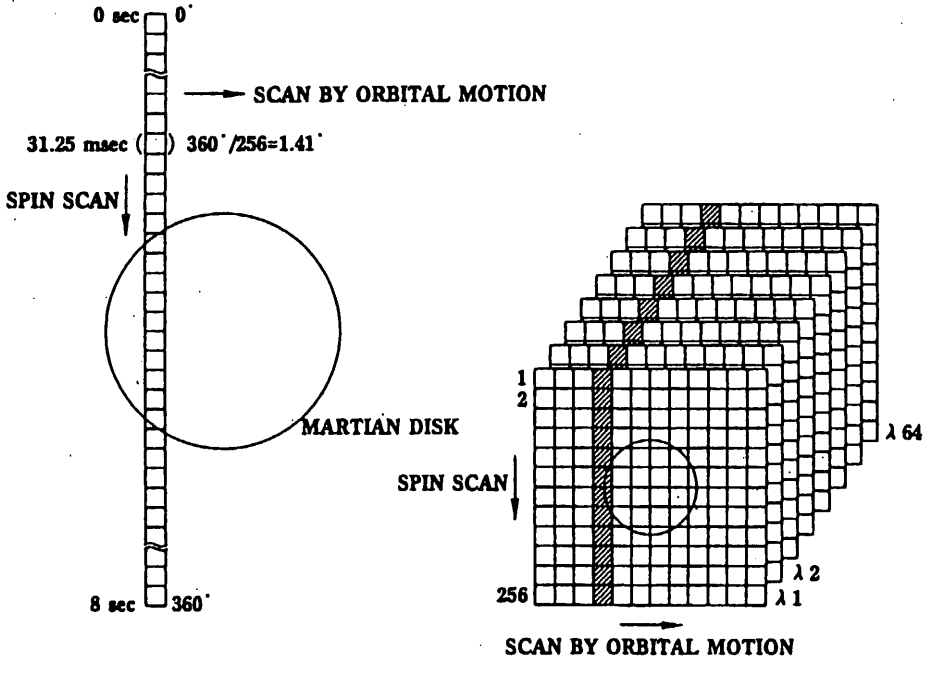

Fig. 2.3.2.3*a* Imaging method of UVS using the spin and orbital motion of spacecraft.

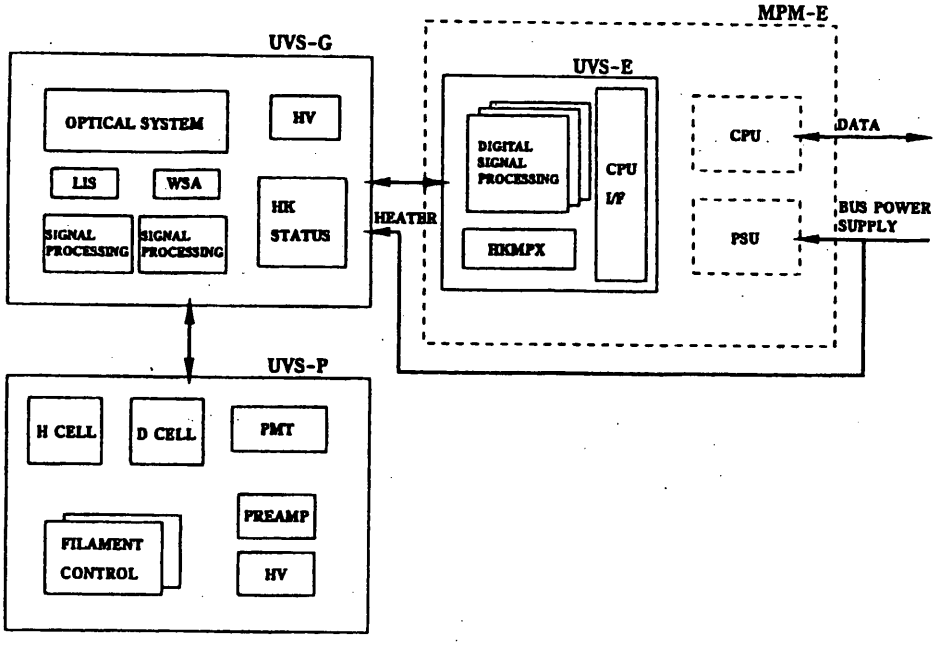

Fig. 2.3.2.3*b* A block diagram of the UVS instrument.

The UVS instrument consists of UVS-G and UVS-P sensors and an electronic unit, UVS-E. A block diagram of the UVS is shown in Figure 2.3.2.3b and specifications of the UVS are listed in Table 2.3.2.3. All the units were designed to be small and light as possible with minimal degradation of optical performance in order to suit the weight and power budget requirements.

UVS-G

Ultraviolet emissions incident into the aperture of UVS-G are collected by an objective mirror which is an off-axis parabolic mirror with a 50 mm diameter and a 100 mm focal length. This mirror is made of beryllium and plated with nickel for satisfying requirements in weight budget and optical performance. A mount for this mirror is also made of beryllium. An entrance slit with 0.15 mm × 0.50 mm rectangular aperture limits the instantaneous field-of-view of the instrument to 0.09° (in a plane perpendicular to the spin axis) × 0.29° (in a plane including the spin axis).

The incident ultraviolet emissions are dispersed by a concave grating with a 50 mm diameter ruled area and focused on the two ultraviolet detectors. The optical surfaces of the mirror, the grating and the windows of the detectors should be kept clean, because the contamination on the optical surfaces severely degrades transmission of vacuum ultraviolet light. The first order spectrum between 115 nm and 200 nm is detected by a micro-channel plate (MCP) with strip anodes, and the second order spectrum between 200 and 310 nm is detected by a MOS linear image sensor (LIS) which has a linear array of photodiodes. Note that the spectral resolution of UVS-G (2-3 nm) is determined by dispersion of the grating and that the spatial resolution of the detectors is designed to match the dispersed images. The second order spectrum is folded by dichraic mirrors placed in front of LIS to avoid mechanical interference between the detectors and to distinguish the second order spectrum of 200-310 nm from the first order spectrum of 400-620 nm. The signal from the LIS is also used as a bright object sensor (BOS).

The signal from the BOS shuts down the high-voltage supply to MCP to avoid permanent damage of the photodetector by an exposure of a very bright object such as the Martian bright disk.

A baffle and field stops suppress stray light when the filed-of-view of UVS-G is close to the bright disk. A cap is attached at the end of the baffle to keep the optics clean and dry until launch. The phase clock (PCLK) divides a spin period into 256 time intervals for timing of data sampling. Thus, the spatial resolution of this instrument is 1.41° × 0.29°. The baffle field-of-view is 10°. All of the antennas and extendible masts of the spacecraft are deployed outside of this field-of-view.

Table 2.3.2.3 Specifications of UVS-G and UVS-P

Item	Characteristic
UVS-G	
Wavelength Region	115 - 310 nm
Spectral Resolution	2.7 nm @ 115 - 200 nm (1st order) 3.4 nm @ 200 - 310 nm (2nd order)
Field-of-View	0.29° (in a plane including the spin axis) 0.09° (in a plane perpendicular to the spin axis)
Spatial Resolution	0.29° (in a plane including the spin axis) 1.41° (in a plane perpendicular to the spin axis)
Detector	MCP with Strip Anode and LIS
Maximum Count Rate of MCP	2.2×10^4 cps
Dynamic Range of LIS	10^5 - 10^9 Photon/s/Pixel
UVS-P	
Wavelength	121.566 nm (H Lyman α) 121.533 nm (D Lyman α)
Field-of-View	3.0° (in a plane including the spin axis) 0.5° (in a plane perpendicular to the spin axis)
Spatial Resolution	3.0° (in a plane including the spin axis) 1.41° (in a plane perpendicular to the spin axis)
Detector	Side-on type solar blind photomultiplier
Sensitivity	0.25 cps/R

UVS-P

UVS-P consists of two absorption cells, a bandpass filter and a photomultiplier tube. Each absorption cell has a 25 mm (D) x 62 mm (L) cylindrical shape. MgF_2 windows are attached at both ends of the cell. Light from hydrogen corona is collected by a MgF_2 lens which is used as one of the windows of the first absorption cell. The bandpass filter is used to select hydrogen and deuterium Lyman α emissions from the background continuum. Pure hydrogen or deuterium gas is filled in the cell at pressure of a few Torr. The hydrogen or deuterium molecules are thermally dissociated into atoms by tuning on one of four tungsten filaments fixed at the inner wall of the cell. Then, atomic hydrogen or deuterium atoms absorb Lyman α emission from the same isotope. A side-on type solar-blind photomultiplier tube is placed at the focus of the lens and detects H and/or D Lyman α emission. Tuning-on sequence and temperature of filaments are controlled by software. A baffle suppresses stray light when the filed-of-view of UVS-P is close to the bright disk of Mars. A cap is attached at the end of the baffle to keep the optics clean and dry until launch. The instantaneous field-of-view of UVS-P is $0.5° \times 3.0°$ and the spatial resolution is $1.4° \times 3.0°$. The baffle field-of-view is 20°. All of the antennas and masts of the spacecraft are deployed outside of this field-of-view.

2.3.2.4 Extendible Mast (MST)

Extendible mast system(MST) installed on PLANET-B spacecraft is a subsystem to keep a sensor for magnetic field measurements(MGF-S) in sufficient distance from the spacecraft, because the magnetic field to be measured is very weak compared with the magnetization of the spacecraft.

The MST system has to be transported from the ground to space in a packed configuration. The sensor is installed at the top of the mast. Extendible mast will extend through a command, and will keep the sensor in a proper position.

The mast to be applied to PLANET-B is "HINGELESS MAST" that is classified in a group of coilable lattice type, and is developed through the cooperation of ISAS and a contract company. The MST system is composed of two components, one MST-M and MST-E. The latter component is installed in MPM-E.

MST-M

MST-M is mainly composed of four units, which are a canister, a drive unit, a HINGELESS MAST, and a top plate(see Figure 2.3.2.4a). The canister is made of composite material (Graphite/Epoxy) due to the requirement of weight reduction. The drive unit powered by a DC-brushed motor is installed in a bottom section of the canister, and has a function of mast extension in orbit and retraction at ground testing. It holds the mast in a stowed configuration, and extends the mast by releasing a center strap. The HINGELESS MAST consists of continuos longerons, integrated radial spacers, diagonal wires, and a center strap. Radial spacers play a role of hinges through the elastic deformation of itself. It much reduces the weight of hinges, and can also realize the high structural accuracy. Deployment force of the mast is generated by the elastic energy of the stored longerons and radial spacers. Some details of the HINGELESS MAST are shown in Figure 2.3.2.4b. The top plate is installed on the top of the mast to satisfy mechanical and thermal interfaces for the sensor. The plate is made of non-magnetic materials; aluminum honeycomb sandwich structure. Materials of MST-M are shown in Table 2.3.2.4a. Mechanical properties and thermal properties are shown in Table 2.3.2.4b.

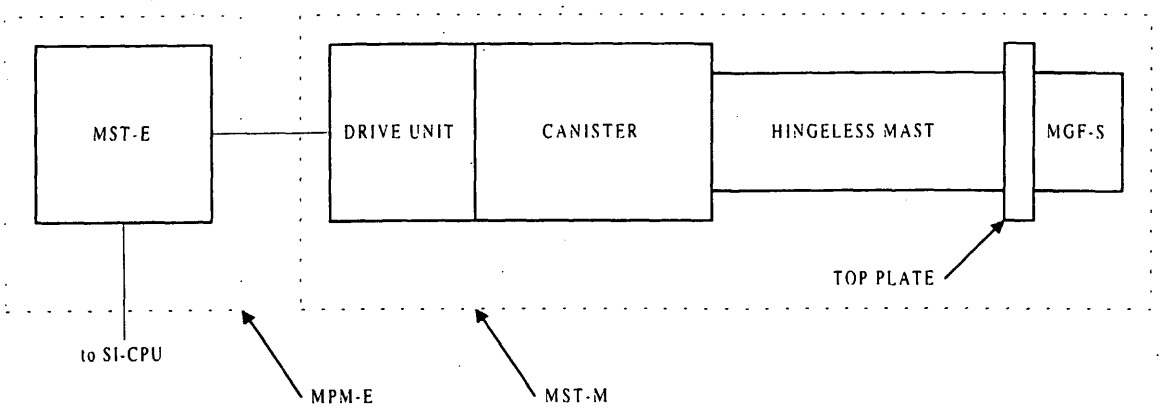

Figure 2.3.2.4a Components of MST

Table 2.3.2.4a Materials of MST-M

Item		Material
HINGELESS MAST	LONGERON	S2-GLASS/EPOXY
	RADIAL SPACER	POLYIMIDE
	DIAGONAL WIRE	TITANIUM
TOP PLATE		ALUMINUM ALLOY HONEYCOMB SANDWICH
CANISTER		GRAPHITE/EPOXY
CENTER STRAP		PHOSPHOR BRONZE

Table 2.3.2.4b Mechanical & Thermal properties of MST-M

Item		Stowed	Deployed
Weight		2.56kg	
Dimension		357× ϕ 270 mm	5,334× ϕ 270 mm
Center of gravity		ref.Fig.2.3.3.1f	←
Moment of inertia	Ix	442kgcm^2	1.40×10^{5}kgcm^2
	Iy	422kgcm^2	1.40×10^{5}kgcm^2
	Iz	250kgcm^2	250kgcm^2
MST Diameter		-	ϕ 150mm
Stiffness	Bending	-	1.42×10^{8}kgmm^2
	Shearing	-	34kg
	Torsional	-	1.62×10^{6}kgmm^2
Buckling strength	Bending	-	338kgmm
	Torsional	-	61kgmm
Pointing accuracy (repeatability & stability)		-	less than ±5.0deg
Heat generation		Max.12.0W	
Heat mass		2.57×10^3 J/K	
Time of extention(REF.)		Approx. 16~22min	

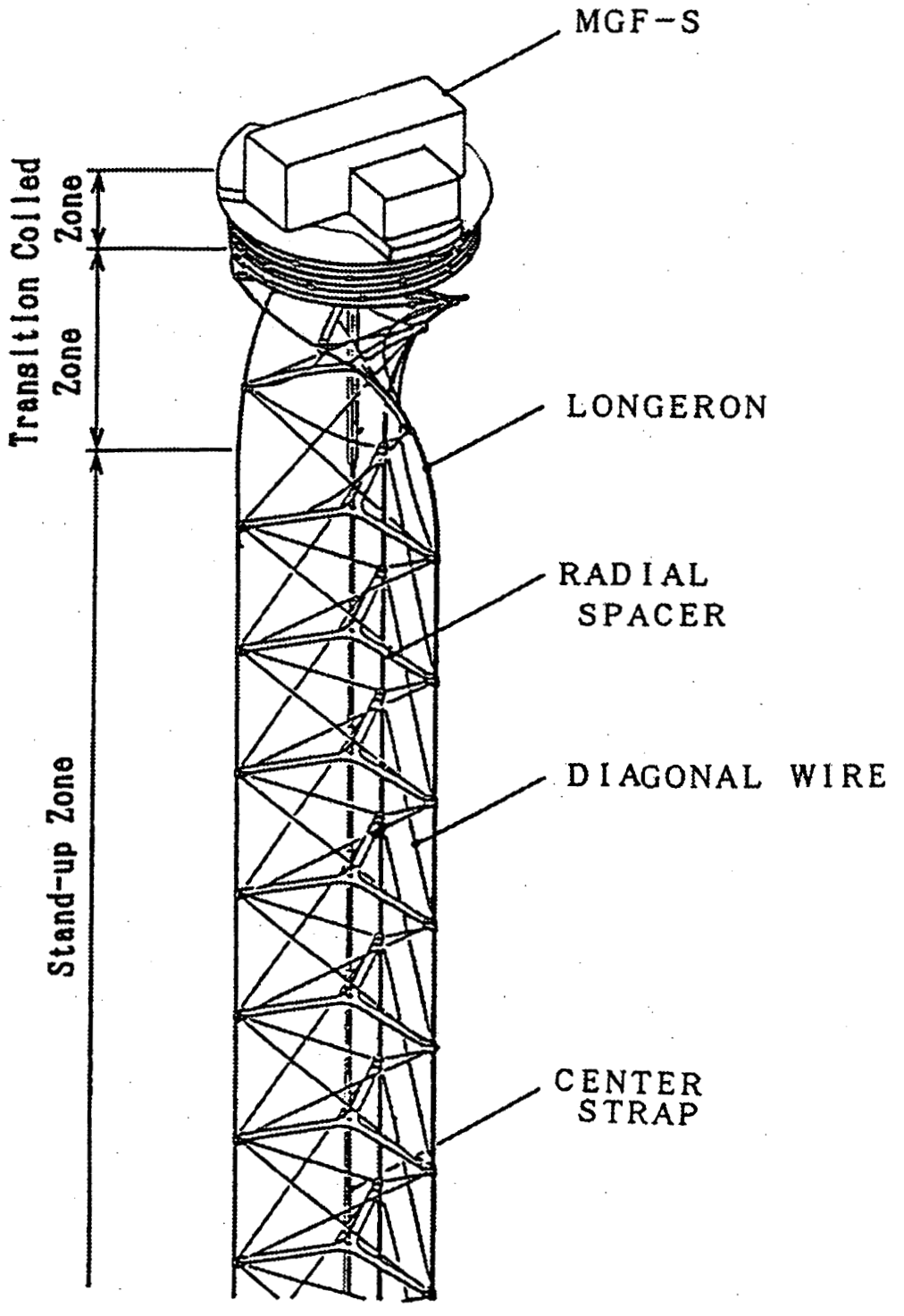

Figure 2.3.2.4b Detail of the HINGELESS MAST

2.3.2.5 MPM-E

MPM-E is composed of 5 units; MGF/PET-E, UVS-E, MST-E, SI-CPU, and PSU. MGF/PET-E, UVS-E, and MST-E govern corresponding peripherals with command control, status monitor, housekeeping monitor, and acquisition of mission data. SI-CPU has a role of an interface between each unit and DHU through PIM, along with mission data edition if necessary.

SI-CPU

SI-CPU consists of two parts; PIM and CPU. The program loading/verification for CPU is made with DMA mode from DHU through PIM. The command and telemetry (both HK and mission data) interface are made with DPRAM between PIM and CPU. 8-bit A/D conversion for analog HK items is done automatically without CPU-control.

The major jobs for the onboard program that is running on CPU are;

1) Command decoding,
2) Preparation of bi-level housekeeping items, including instrument status check and control, and
3) Acquisition and edition of mission data.

MGF/PET-E

MGF/PET-E consists of 4 parts; MGF-E, PET-E, A/D converter, and SI-CPU interface. A/D converter with 4-channel multiplexer digitizes 3-component magnetic field data from MGF-E and composite PET data from PET-E, with a sample rate that is 256 times of spacecraft spin frequency. Digitized data are stored in a FIFO memory and SI-CPU reads stored data once every spin.

UVS-E

High-voltage supply for MCP is set up by a command and also signals from BOS. MCP operates in the photon counting mode. A photon incident into MCP generates current pulses in either strip anodes. Since the pulse heights, H1 and H2, are proportional to the distance from the position where a photon enters MCP to either edge of the strip anodes, the relative position X of the incident photon on the strip anodes is calculated from the relation of X=H1/(H1+H2). The position is assigned by referring a table stored in RAM with 8-bit resolution and the stored pulse heights in one of two dual-port RAMs, while the other pulse heights are ready to be read by SI-CPU. A flag indicates which DP-RAM is ready to be read. The high-voltage level and discriminator level of MCP, and the discriminator level of the BOS signal are set up by commands. These parameters are stored in the HK data.

Charges induced by incident photons in each element of LIS are sequentially read out, amplified, digitized and stored in a FIFO memory. Timing of reading-out is triggered by a PCLK pulse from AOCE.

The photomultiplier tube in UVS-P also operates in the photon counting mode. Current pulses from the photomultiplier tube are amplified and shaped, and then real current pulses corresponding to incident photons are discriminated from noise pulses which have relatively low pulse heights. Arrival of the pulses is counted by a non-reset counter, of which count is latched at every PCLK pulse and read by SI-CPU. Selection of turned-on filaments, filament temperature, high-voltage level applied to the photomultiplier tube and discriminator level are set up by commands and can be monitored in the HK.

All the scientific data are allocated to the memory space of SI-CPU. HK status, HK data, I/O flags, and commands are also allocated to the I/O space. An interrupt pulse is generated at start of each spin referring the IP pulse from AOCE. This pulse is sent off to INT7 of SI-CPU.

A data ready signal of TCLK2 interrupts SI-CPU and then SI-CPU reads the data. The HK status and HK data are renewed for every 1/16 of the spin period.

MST-E

MST-E is composed of a print board and software in SI-CPU. The print board is supported by 9 small blocks, 4 mid-ribs, and a frame in MPM-E box. They isolate MST-E board from other print boards and protect it from vibration and shock disturbance by its stress relief. MST-E has three connectors; one is used for interface of SI-CPU, one is used for MGF-S, and the other is used for MST-M.

2.3.3 Instrument Configuration

The subsystem MPM consists of 6 units; MPM-E, MGF-S, PET-S, UVS-G, UVS-P, and MST-M. The outlines of each unit are given in Figure 2.3.3.1. The sensor of the MGF instrument (MGF-S) is installed at the end of the deployable mast (MST-M). The two sensors of the PET instrument (PET-S) are put at the end of the two solar paddles, respectively. MPM-E is composed of 5 units; MGF/PET-E, UVS-E, MST-E, SI-CPU, and PSU. The functional configuration of the total MPM-E subsystem is given in Figure 2.3.3.2. The conceptional diagram of the MPM system is shown in Figure 2.3.3.3.

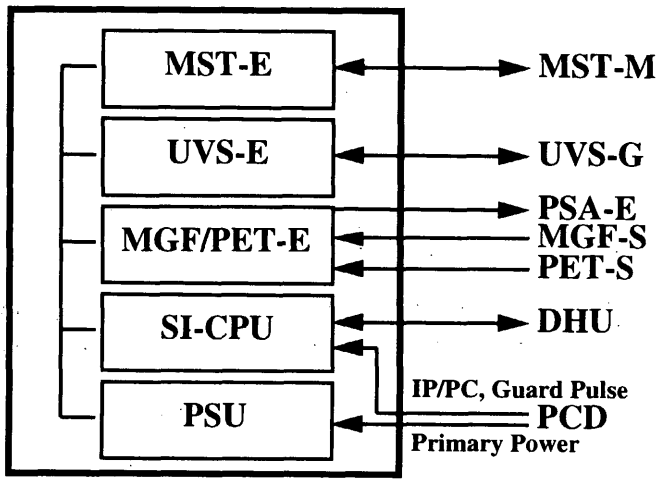

Figure 2.3.3.2. Functional Diagram of MPM-E

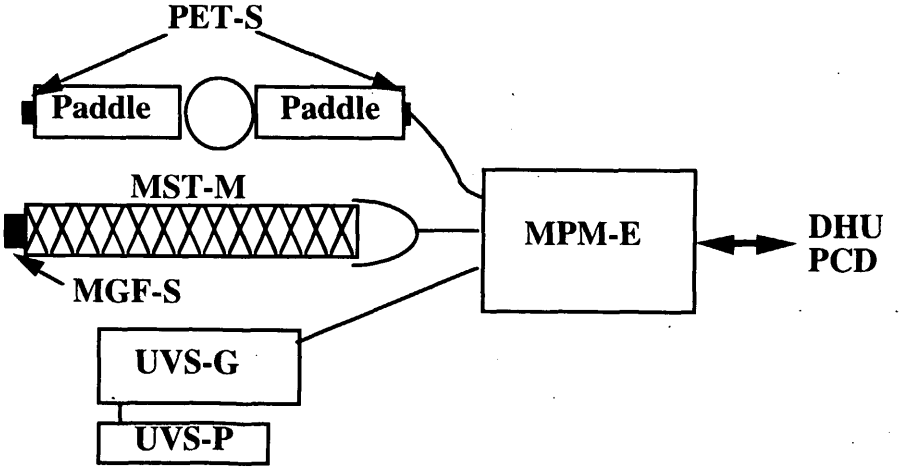

Figure 2.3.3.3. Conceptional Diagram of MPM

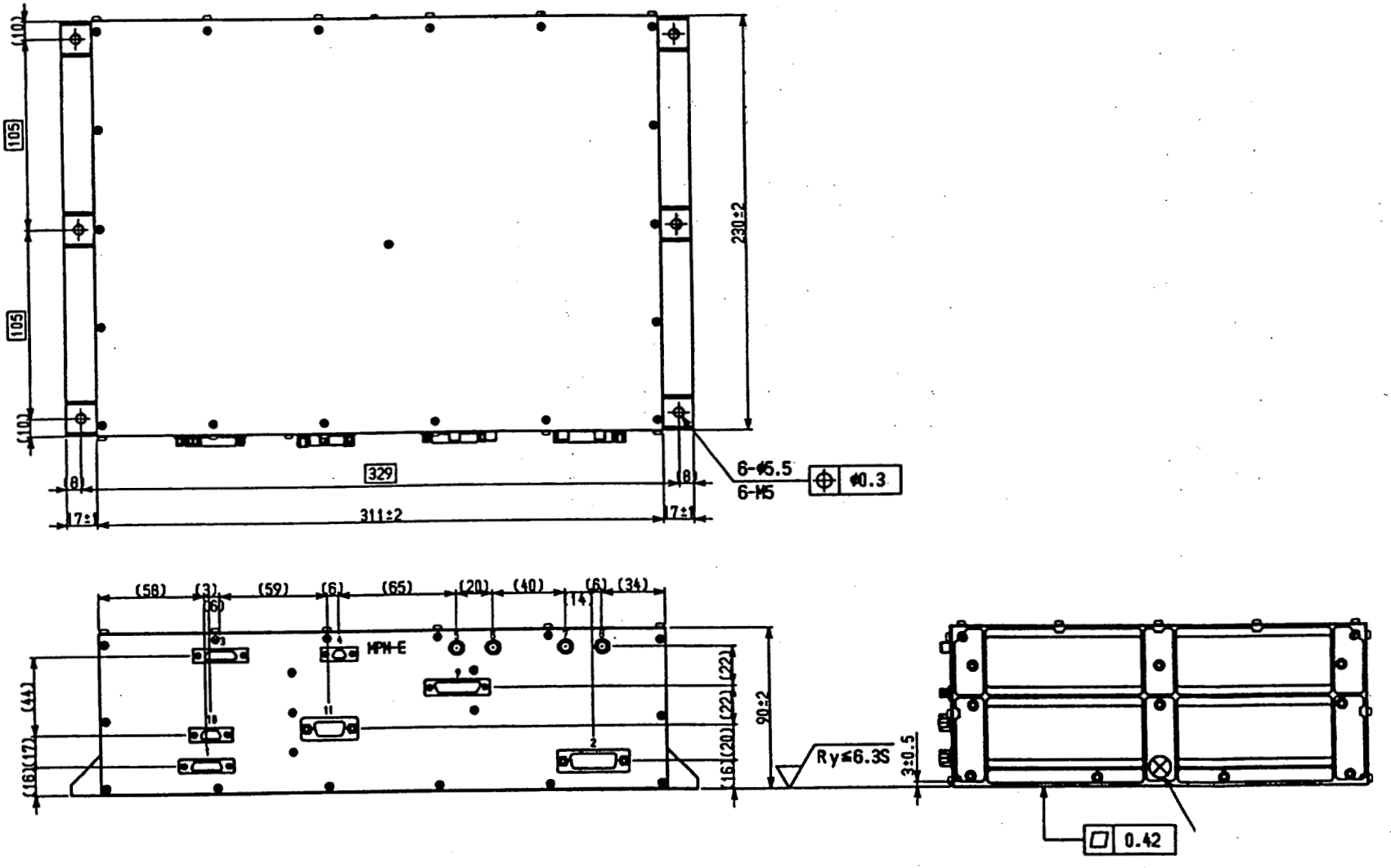

Figure 2.3.3.1*a*. Outline of MPM-E

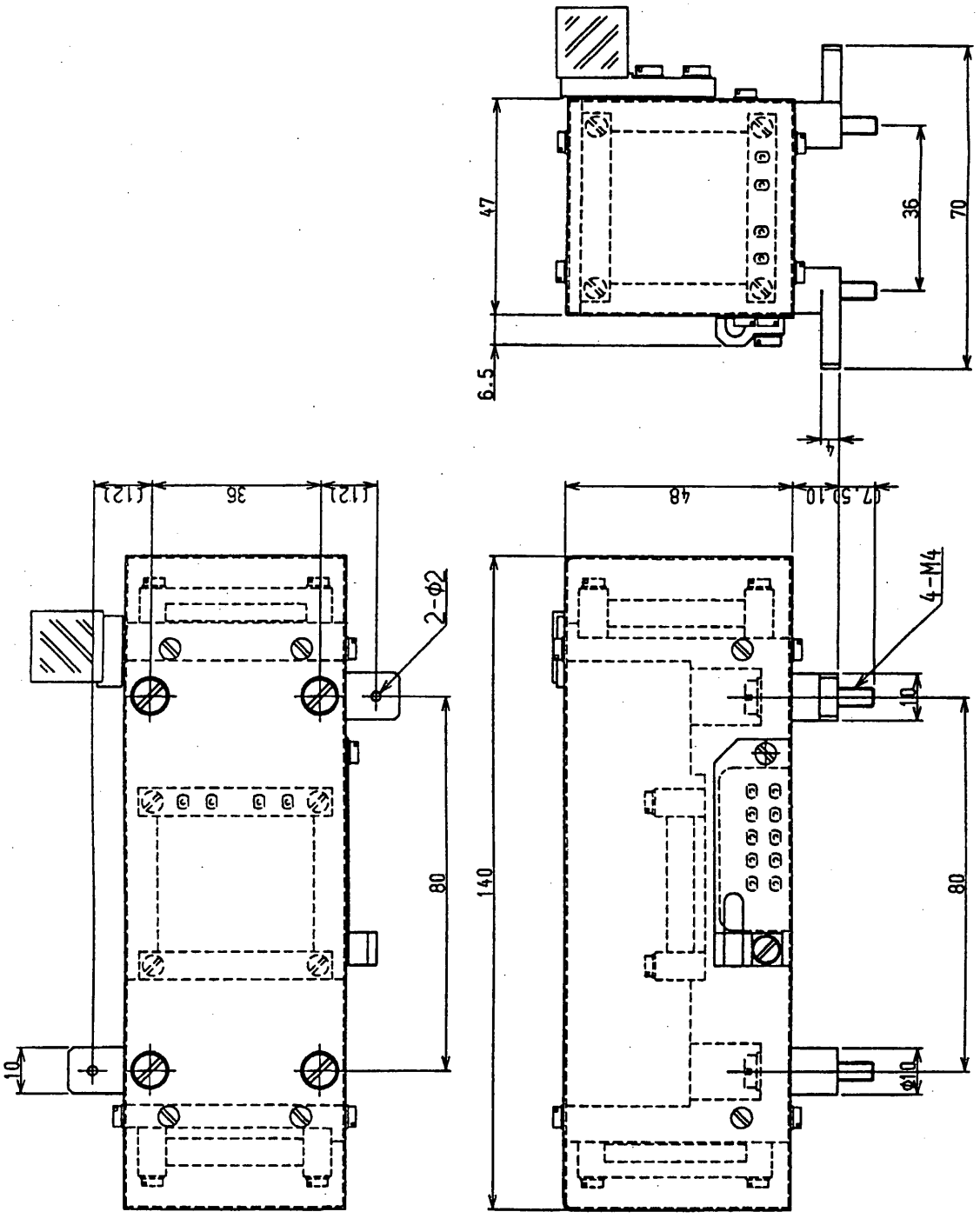

Figure 2.3.3.1*b*. Outline of MGF-S

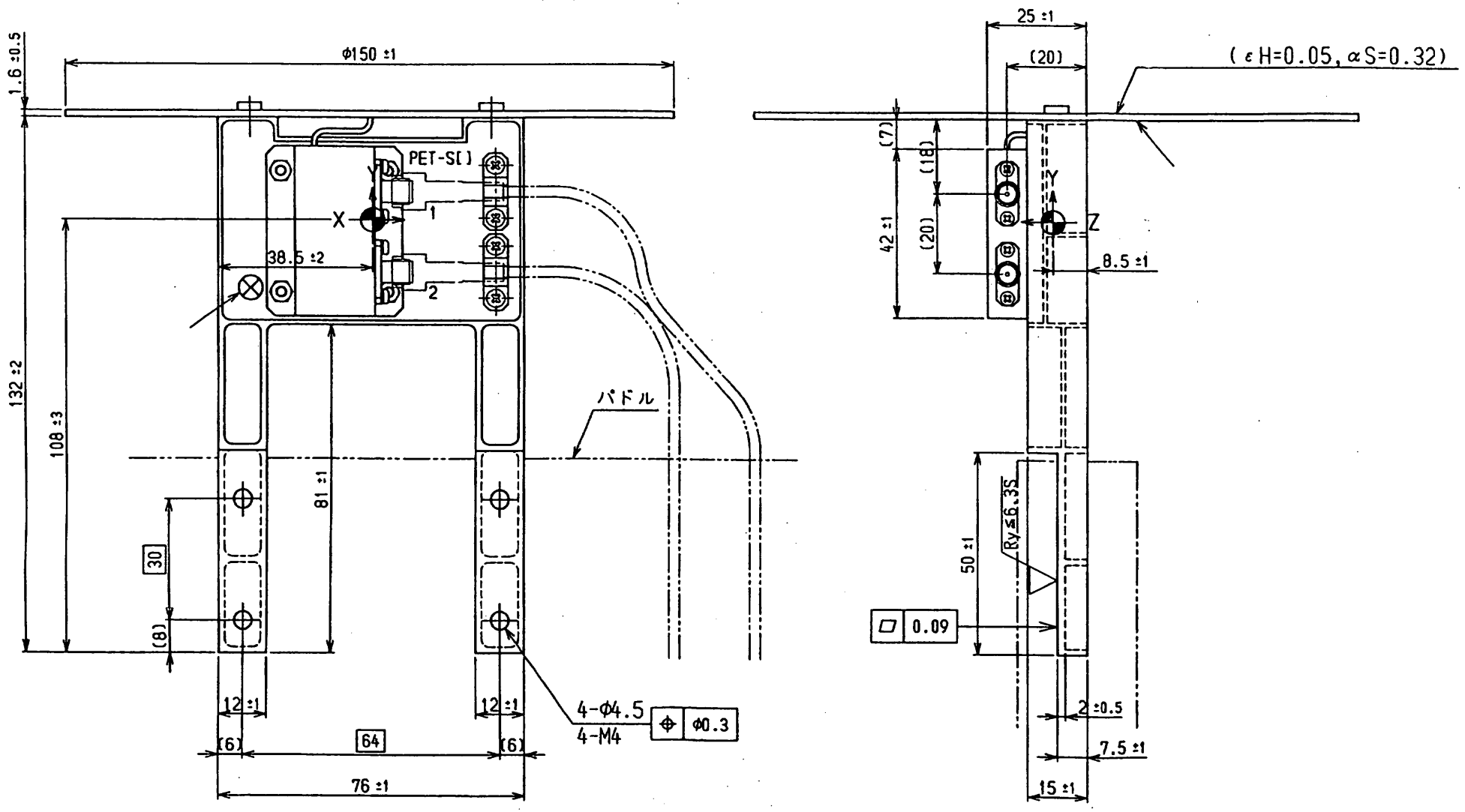

Figure 2.3.3.1*c*. Outline of PET-S

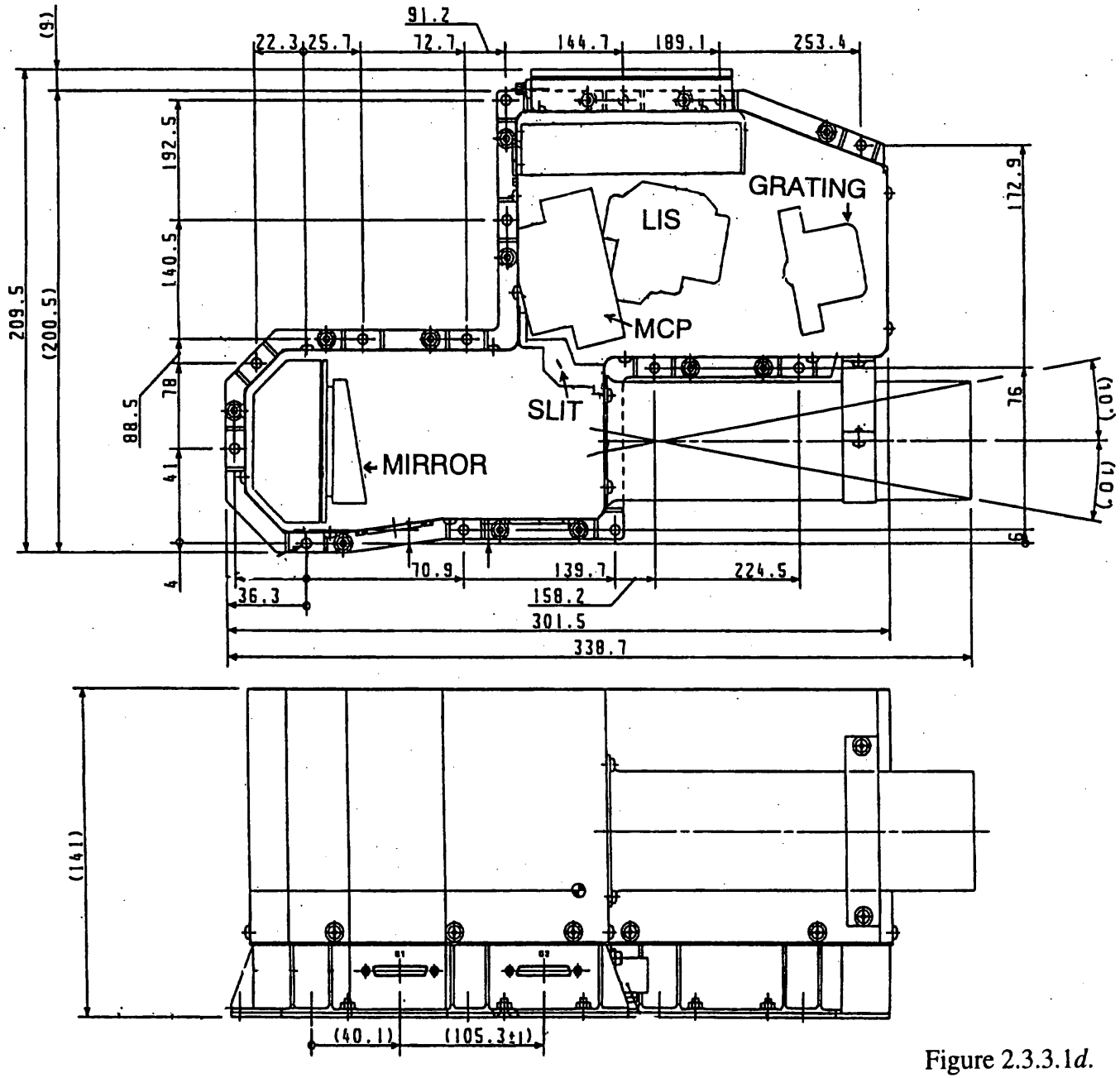

Figure 2.3.3.1*d*. Outline of UVS-G

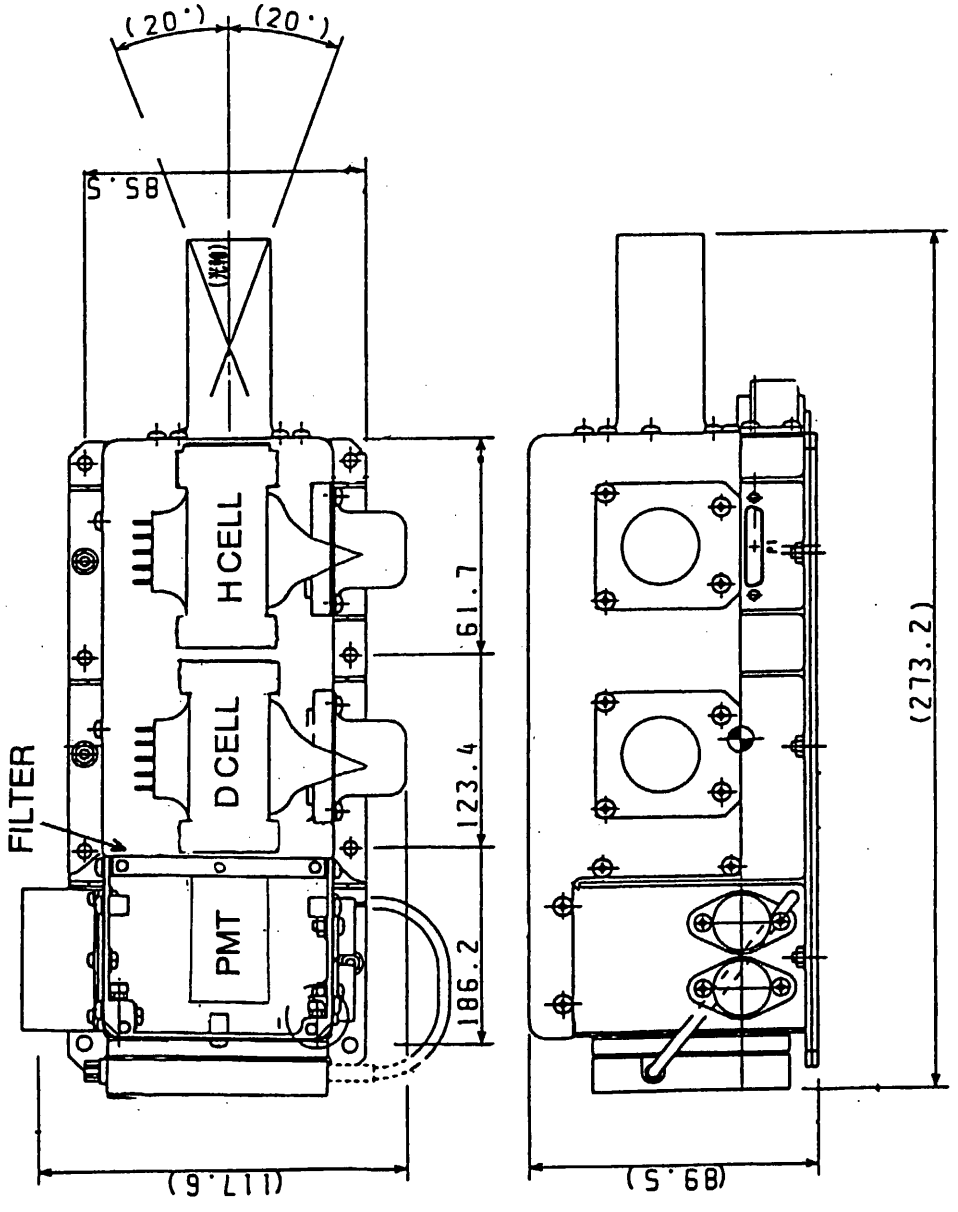

Figure 2.3.3.1*e*. Outline of UVS-P

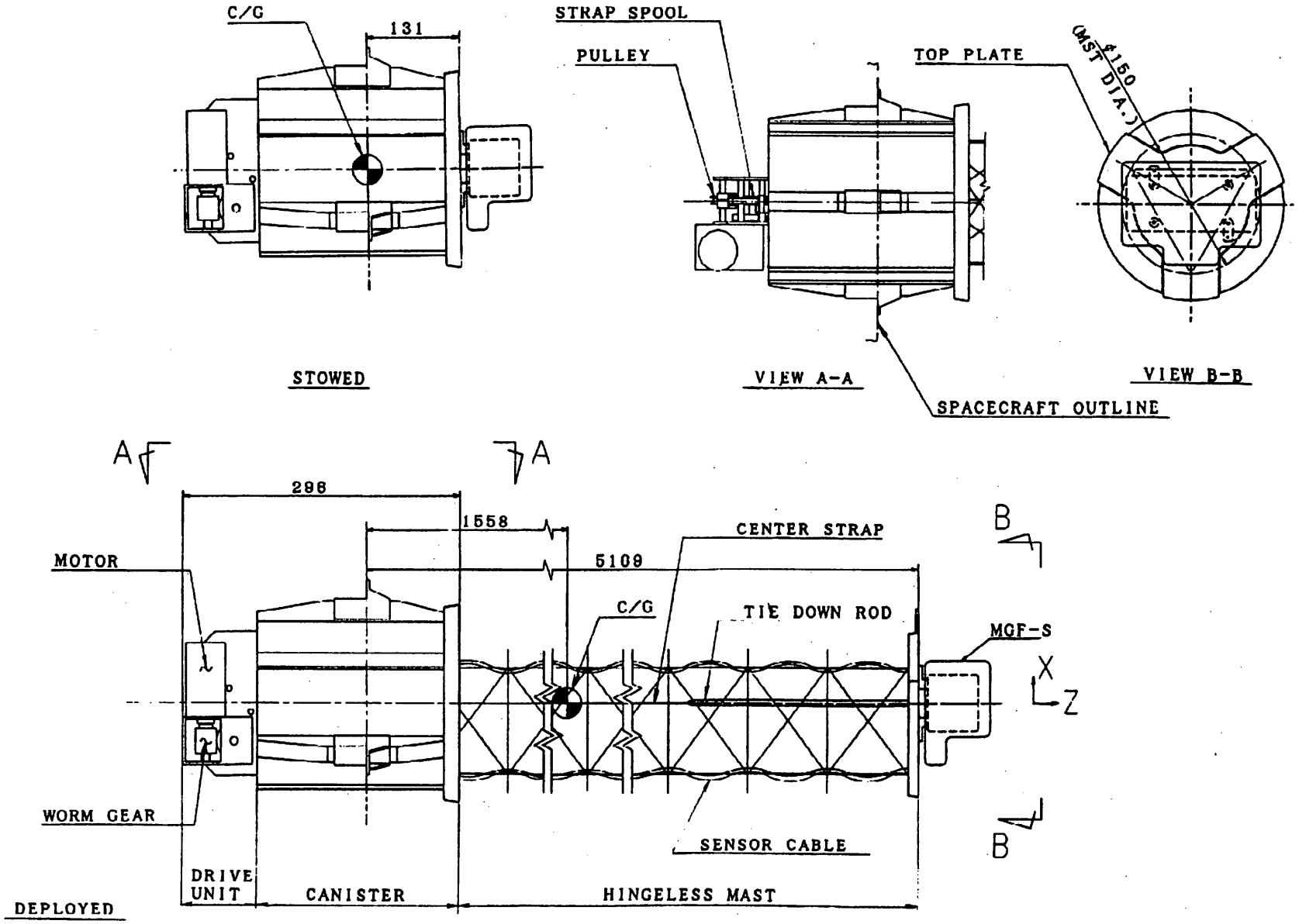

Figure 2.3.3.1*f*. Outline of MST-M

2.3.4 Size, Weight, and Power Consumption

2.3.4.1 Size and Weight

The size and weight of MPM sub-components are listed in Table 2.3.4.1.

Table 2.3.4.1 Size and Weight of MPM sub-components

Unit	Size (mm)	Weight (kg)
MGF-S	140×50×50	0.47 (Including Cable)
PET-S	ϕ150	0.26 (a pair of sensors)
MST-M	288×ϕ270 (Stowed) 5318×ϕ270 (Deployed)	2.55
UVS-G	339×214×141	1.77
UVS-P	273×96×90	0.83
MPM-E	311×230×90	2.71

2.3.4.2 Power Consumption

Power consumption of each unit in MPM is listed in Table 2.3.4.2.

Table 2.3.4.2 Power Consumption of MPM

SICPU UNIT : mA

Operation Mode		+5V	+12V	-12V	+29V	BUS (27V)	BUS (19V)
CPU_ON/RST	AVE.	220	3.4	19	0	0	0
CPU_ON/RUN	AVE.	340	3.4	19	0	0	0
	MAX.	360	33	25	0	0	0

MGF/PET UNIT : mA

Operation Mode		+5V	+12V	-12V	+29V	BUS (27V)	BUS (19V)
MGF/PET OFF	AVE.	23±5	4±1	3±1	0	0	0
	MAX.	23±5	5±1	5±1	0	0	0
MGF/PET ON	AVE.	28±5	117±10	80±10	0	0	0
	MAX.	30±5	119±10	84±10	0	0	0

MST UNIT : mA

Operation Mode		+5V	+12V	-12V	+29V	BUS (27V)	BUS (19V)
MST STBY OFF	AVE.	60	60	65	0	0	0
MST STBY ON	AVE.	80	75	80	0	2	1
MST DRV ON	AVE.	80	75	80	0	27	21
MST HTR ON	AVE.	80	75	80	0	122	88

UVS

UNIT : mA

Operation Mode		+5V	+12V	-12V	+29V
UVS OFF	AVE.	100	15	19	4
UVS ON	AVE.	420	104	159	4
UV OBS	AVE.	420	138	164	4
PM OBS	AVE.	420	104	163	287
UV/PM OBS	AVE.	420	157	168	287

MPM Total Power Consumption

UNUT:W

PSU/CPU	BUS-V : 24V
DIST-ON	7.6
CPU-RUN	8.1

MGF / PET	BUS-V : 24V
MGF/PET-ON	+ 2.9

MST	BUS-V : 27V
STBY-ON	+ 0.5
HTR-ON	+ 1.2
DRV-ON	+ 3.8

UVS		BUS-V : 22V	
UVS-ON		+ 5.1	
G-HV-ON		+ 0.9	
PM-HV-ON		+ 0.4	(SEL SET)
H-CELL	TEMP=0	+ 3.7	A
	TEMP=1	+ 4.2	A
	TEMP=2	+ 4.4	
	TEMP=3	+ 4.6	D
D-CELL	TEMP=0	+ 4.0	A
	TEMP=1	+ 4.2	A
	TEMP=2	+ 4.8	
	TEMP=3	+ 4.4	D

2.3.5 Operation

2.3.5.1 MGF and PET

MGF and PET will be operated basically with one mode after the Mars insertion, except for the spacecraft emergency. The onboard sampling rate is fixed as 256 data every spin. Sampled data are edited by SI-CPU for allocated telemetry rate. The time and quantitative resolution of MGF and PET is summarized in Table 2.3.5.1.

In periapsis mode (Format [10]h) and standard observation mode (Format [11]h), when bit rate is 64k or 32k bps the originally sampled MGF data (15 bits resolution, 256 vectors/spin) are output to the telemetry. When bit rate is 16k–256 bps the MGF data are averaged by onboard software. When bit rate is 4k, 2k or 1k bps, the quantitative resolution decreases to 12 bits. When bit rate is 512 or 256 bps, the quantitative resolution varies from 10 to 12 bits depending on the magnetic field strength. When bit rate is 64 bps, only onboard despin data are output.

PET can give meaningful data only in the Martian ionosphere. Therefore most of the time PET data will be taken in periapsis mode with telemetry bit rate above 16k bps. This means that electron temperature is measured roughly every 2 seconds. When telemetry bit rate is at or below 1k bps, energy sweep data or VF data are output depending on the PET edition mode.

Range change for MGF is made manually or automatically. In the nominal operation it is under CPU control. The function of sensor polarity change is available for inflight determination of sensor offset.

Table 2.3.5.1 MGF/PET Data Resolution

Bold = **Normal** *Italic* = *Backup* = Not Defined

FORMAT 03 (MST Extension)

Bit Rate bps		64k	32k	16k	8k	**4k**	2k	1k	512	256	*128*	64
MGF	Number of Vectors / Spin					**128**					*8*	
	Byte Length of Each Component					**2**					*1*	
PET	Number of Sweeps / Spin					**4**					*1/16*	
	Number of Data Points / Sweep					**16**					*8*	

FORMAT 10 (Periapsis Mode) / 11 (Standard Observation Mode)

Bit Rate bps		**64k**	**32k**	**16k**	**8k**	**4k**	**2k**	*1k*	**512**	**256**	128	*64*
MGF, PET and UVS ON												
MGF	Number of Vectors / Spin	**256**	**256**	**128**	**64**	**32**	**16**	*8*	**8**	**8**		*1 despin data*
	Byte Length of Each Component	**2**	**2**	**2**	**2**	**1.5**	**1.5**	*1.5*	**1**	**1**		*/ 4 Spin*
PET	Number of Sweeps / Spin	**16**	**8**	**4**	**2**	**4**	**2**	*1*	**1/16**	**1/16**		*1/64*
	Number of Data Points / Sweep	**16**	**16**	**16**	**16**	**16**	**16**	*8*	**8**	**8**		*8*
MGF and PET ON, UVS OFF												
MGF	Number of Vectors / Spin	**256**	**256**	**256**	**128**	**64**	**32**	*16*	**8**	**8**		*1 despin data*
	Byte Length of Each Component	**2**	**2**	**2**	**2**	**2**	**1.5**	*1.5*	**1.5**	**1**		*/ 4 Spin*
PET	Number of Sweeps / Spin	**16**	**16**	**8**	**4**	**2**	**4**	*2*	**1**	**1/16**		*1/64*
	Number of Data Points / Sweep	**16**	**16**	**16**	**16**	**16**	**16**	*16*	**8**	**8**		*8*

Table 2.3.5.1 (continued) MGF/PET Data Resolution

FORMAT 13 (UVS/XUV Mode)

Bit Rate bps		64k	32k	16k	8k	4k	2k	1k	512	256	128	64
MGF, PET and UVS ON												
MGF	Number of Vectors / Spin	256	256	256	128	64	32					
	Byte Length of Each Component	2	2	2	2	2	1.5					
PET	Number of Sweeps / Spin	16	16	8	4	2	4					
	Number of Data Points / Sweep	16	16	16	16	16	16					
MGF and PET ON, UVS OFF												
MGF	Number of Vectors / Spin	256	256	256	256	256	128					
	Byte Length of Each Component	2	2	2	2	2	2					
PET	Number of Sweeps / Spin	16	16	16	16	16	4					
	Number of Data Points / Sweep	16	16	16	16	16	16					

FORMAT 14 (MIC Mode) / 15 (WFC Mode) / 16 (MDC Mode)

Bit Rate bps		64k	32k	16k	8k	4k	2k	1k	512	*256*	128	*64*
MGF, PET and UVS ON												
MGF	Number of Vectors / Spin	256	128	64	32	16	8			*1 despin data*		*1 despin data*
	Byte Length of Each Component	2	2	2	1.5	1.5	1.5			*/ 2 Spin*		*/ 8 Spin*
PET	Number of Sweeps / Spin	8	4	2	4	2	1			*1/32*		*1/128*
	Number of Data Points / Sweep	16	16	16	16	16	8			*8*		*8*
MGF and PET ON, UVS OFF												
MGF	Number of Vectors / Spin	256	256	128	64	32	16			*1 despin data*		*1 despin data*
	Byte Length of Each Component	2	2	2	2	1.5	1.5			*/ 2 Spin*		*/ 8 Spin*
PET	Number of Sweeps / Spin	16	8	4	2	4	2			*1/32*		*1/128*
	Number of Data Points / Sweep	16	16	16	16	16	16			*8*		*8*

2.3.5.2 UVS

UVS operates with three modes in the PLANET-B experiments; Standard Observation Mode, Periapsis Mode and UVS-XUV Mode. The number of mission packets occupied by the UVS data and the available telemetry bit rate are different in these modes. Scientific data taken by the UVS are arranged in mission packets as 4 observation modes and 8 observation sub-modes as shown in Tables 2.3.5.2a and 2.3.5.2b. The observation modes determine the operation of the two photodetectors of UVS-G and provide the edition format of data taken by them, while the observation sub-modes fix the turning-on sequence of the absorption cell filaments in the UVS-P experiment.

The UVS data are stacked as synchronized with the spin phase. The time for stacking is changed depending on the telemetry bit rate from 8 sec (1 spin period) to 2048 sec (256 spin period). Each mission packet (432 bytes) for UVS data contains science data of 416 bytes and a 16-byte header which includes all information necessary for analysis of the science data. The number of spins for UVS data staking is listed in Table 2.3.5.2c.

Observation Mode (0)

The LIS detector of UVS-G measures emissions from the bright disk at 52 wavelength selected between 200 and 310 nm. MCP is off.

Observation Mode (1)

The MCP detector of UVS-G measures emissions from hydrogen corona, oxygen corona and oxygen aurora at 13 wavelengths selected between 115 and 200 nm.

Observation Mode (2)

The MCP detector of UVS-G measures dayglow emissions from the Martian limb at 52 wavelengths selected between 115 and 200 nm.

Observation Mode (3)

All detectors are operated simultaneously. The MCP detector of UVS-G measures emissions from hydrogen corona, oxygen corona, oxygen aurora and dayglow emissions from the limb at 52 wavelengths between 115 and 200 nm while the LIS detector measures emissions from the bright disk at 52 wavelengths between 200 and 310 nm. A spectrum taken in this mode is also used for calibration of UVS-G.

The observation sub-mode can be selected independent of the observation mode.

Observation Sub-mode (0)

UVS-P is off and generates no data.

Observation Sub-mode (1)

The filament current of the hydrogen cell is fixed at one of four steps to measure hydrogen Lyman α emission profiles using Dopplar shift due to the orbital motion of the satellite.

Observation Sub-mode (2)

The filament current of the deuterium cell is fixed at one of four steps to measure deuterium Lyman α emission profiles using Dopplar shift due to the orbital motion of the satellite.

Observation Sub-mode (3)

The filament current of the hydrogen cell is changed sequentially at four steps to measure hydrogen Lyman α emission profiles.

Observation Sub-mode (4)

The filament current of the deuterium cell is changed sequentially at four steps to measure deuterium Lyman α emission profiles.

Table 2.3.5.2*a* UVS Observation Mode

Mode Number	Objects	Number of Data MCP	LIS
0	Ozone, Dust	0	52
1	Corona, Aurora	13	0
2	Corona, Aurora, Dayglow	52	0
3	Corona, Aurora, Dayglow Ozone, Dust, Calibration	52	52

Table 2.3.5.2*b* UVS Observation Sub-mode

Sub-Mode Number	Objects	Number of Data	Cell Control Sequence Number	H Cell Power	H Cell Temp.	D Cell Power	D Cell Temp.
0	-	0	-	OFF	-	OFF	-
1	Hydrogen	1	0	ON	*	OFF	-
2	Deuterium	1	0	ON	T_3	ON	*
3	Hydrogen	2	0	ON	*	OFF	-
			1	OFF	-	OFF	-
4	Deuterium	2	0	ON	T_3	OFF	-
			1	ON	T_3	ON	*
5	Hydrogen	4	0	OFF	-	OFF	-
			1	ON	T_0 or T_1	OFF	-
			2	ON	T_1 or T_2	OFF	-
			3	ON	T_2 or T_3	OFF	-
6	Deuterium	4	0	ON	T_3	OFF	-
			1	ON	T_3	ON	T_0 or T_1
			2	ON	T_3	ON	T_1 or T_2
			3	ON	T_3	ON	T_2 or T_3
7	Hydrogen	4	0	OFF	-	OFF	-
	&		1	ON	*	OFF	-
	Deuterium		2	ON	T_3	ON	*
			3	ON	T_3	ON	*

* means one temperature level selected from T_0, T_1, T_2 and T_3.

Observation Sub-mode (5)

Hydrogen Lyman α emission intensities are measured by comparing the output signals when the filament of the hydrogen cell is switched on and off.

Observation Sub-mode (6)

Deuterium Lyman α emission intensities are measured by comparing the output signals when the filament of the deuterium cell is switched on and off.

Observation Sub-mode (7)

This sub-mode measures the ratio of deuterium and hydrogen emission intensities sequentially changing the cell status, such as only the H cell on, both cells on, and both cells off.

Table 2.3.5.2*c* Number of Spins for UVS Data Stacking

	#	FORMAT											
Bit Rate bps	10	OBS-P				64k	32k	16k					
	11	OBS-S				64k	32k	16k	8k	4k	2k	1k	512 / 256
	13	UVS	64k	32k	16k	8k	4k	2k		512	256		
	14 15 16	MIC WFC MDC					64k	32k	16k	8k	4k	2k	256
UVS OBS Mode	**0**		1	2	4	8	16	32	64	128	256	256	256
	1		1	1	1	2	4	8	16	32	64	128	256
	2		1	2	4	8	16	32	64	128	256	256	256
	3		2	4	8	16	32	64	128	256	256	256	256

2.3.5.3 MST

The operation of the mast deployment shall be carried out after the Mars insertion of the spacecraft. It shall be kept in stowed configuration during the Earth-parking phase and the trans-Mars cruising phase. Because of the long-time (about 14 months) stowed configuration in the space environment, a special care is taken for the mechanical system.

The mast has three functions; driving, monitoring, and keeping temperature. These functions are shown in Table 2.3.5.3a.

The function block diagram is shown in Figure 2.3.5.3a. Command signals, mast length data, and temperature control signal are processed in SI-CPU board. The mast length data are taken from micro-SW that is operated by strap spool. MST-E receives command signals from SI-CPU. They are STBY ON/OFF, EXT/RET, DRV ON/OFF, HTR ON/OFF.

The deployment of the mast will be made fully automatically under the SI-CPU control. When the SI-CPU notices the fully-deployed condition or the overload status, it automatically stops the deploy sequence. In the case of spacecraft attitude emergency, DHU shall send the "DRV-OFF" command to MPM.

Table 2.3.5.3a Functions of MST

Item		Description
Driving	Mast Extension	The strap spool is driven by the motor, and strap is reliesed from the spool. The mast is extended by itself with elastic energy stored in it at coiled configuration.
	Mast Retraction	The strap spool is driven in reverse by the motor to wind up the strap,and the mast is retracted.
	Stop	The mast is able to be stopped at any time during both extention and retraction by turning off the motor power.
Monitoring	Extension length	Micro-SW-1 counts revolution of the strap spool. Extention length is given by caluculating these data.
	Strap tension	Micro-SW-2 detects the motion of pully, and generates a signal when strap tension is inactive.
	Full retraction	Micro-SW-3 detects the motion of holding hook installed in the unit, and generates a signal when mast is fully retracted.
	Over load	Motor current is checked by the current monitor circuit Motor current is cut as soon as over current is detected.
Keeping temperature		Thermal sensor and heater system keeps the motor temperature in operational range

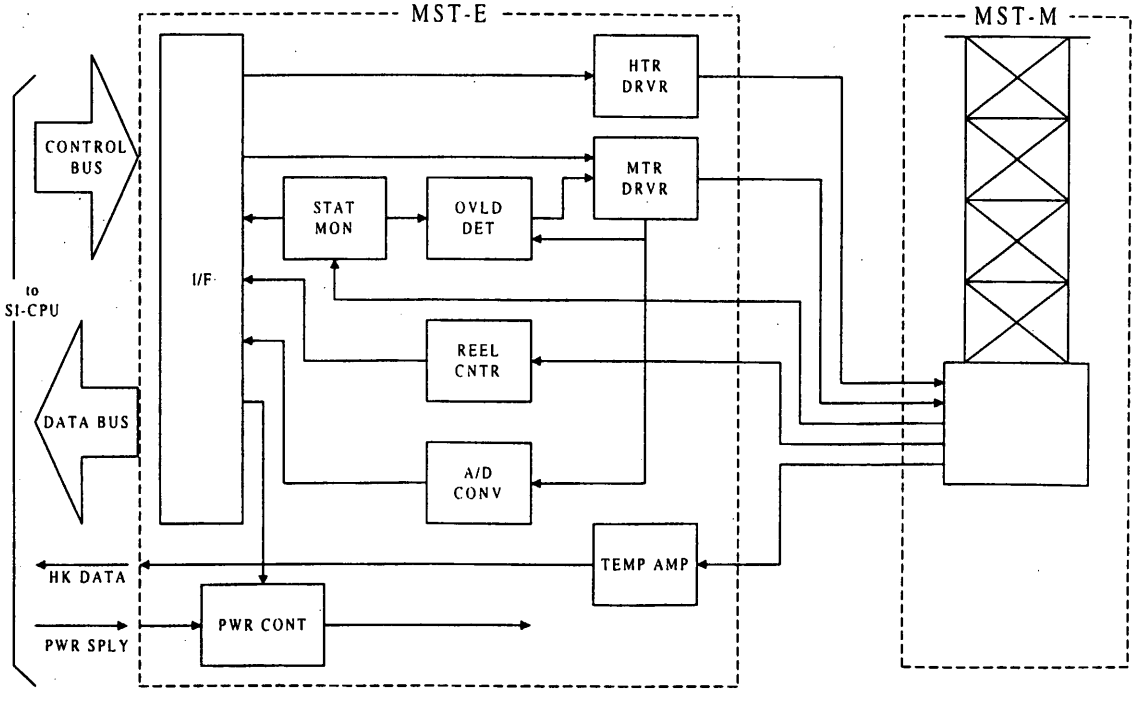

Figure 2.3.5.3a function block diagram of MST

2.3.6 Command and Telemetry Items

2.3.6.1 Command Items

Discrete command items are listed in Table 2.3.6.1a. The details of block command items are described in Table 2.3.6.1b.

Table 2.3.6.1*a* MPM Discrete Command Items (PIM ID = 09)

XY HEX	ITEM	FUNCTION	
01	MPM_CPU_ON	MPM CPU ON	CPU_ON/OFF → ON
04	MPM_MCRP_OUT	MCRP OUT	
05	MPM_REQ_ACK	REQ ACK	
06	MPM_TI_CNT_SET	TI COUNT SET	
07	MPM_TI_CONT_RESTART	TI COUNT RESTART	
08	MPM_A-BUS_GUARD	A-BUS GUARD	
09	MPM_B-BUS_GUARD	B-BUS GUARD	
0A	MPM_A-BUS_GUARD_CAN	A-BUS GUARD CANCEL	
0B	MPM_B-BUS_GUARD_CAN	B-BUS GUARD CANCEL	
10	MPM_HTR_ENA	HEATER ENABLE	HTR_EN/DS → ENA
11	MPM_HTR_DIS	HEATER DISABLE	HTR_EN/DS → DIS
12	MPM_ECC_ENA	ECC ENABLE	ECC_EN/DS → ENA
13	MPM_ECC_DIS	ECC DISABLE	ECC_EN/DS → DIS
14	MPM_WDT_ENA	WDT ENABLE	WDT_EN/DS → ENA
15	MPM_WDT_DIS	WDT DISABLE	WDT_EN/DS → DIS
16	MPM_CPU_RUN	CPU RUN	CPU_RUN/RST → RUN
17	MPM_CPU_RESET	CPU RESET	CPU_RUN/RST → RST
18	MPM_I_LIMIT_ENA	CURRENT LIMITTER ENABLE	
19	MPM_I_LIMIT_DIS	CURRENT LIMITTER DISABLE	
20	MPM_BUS_ACCESS_ENA	BUS ACCESS ENABLE	
21	MPM_BUS_ACCESS_DIS	BUS ACCESS DISABLE	

Table 2.3.6.1*a* (continued) MPM Discrete Command Items (PIM ID = 09)

XY HEX	ITEM	FUNCTION	
30	MGF_PET_ON	MGF/PET ON	MGF/PET → ON MGF_RANGE → AUTO PET_SWEEP → ON
31	MGF_PET_OFF	MGF/PET OFF	MGF/PET → OFF
32	MGF_SENSE_NOR	MGF SENSE NORMAL	MGF_SENSE_ NOR/REV → NOR
33	MGF_SENSE_REV	MGF SENSE REVERSE	MGF_SENSE NOR/REV → REV
34	MGF_RNG_AUTO	MGF RANGE AUTO CONTROL	MGF_RANGE AUTO/BC → AUTO
35	PET_CAL_ON	PET CALIBRATION ON	PET_CAL → ON
36	PET_CAL_OFF	PET CALIBRATION OFF	PET_CAL → OFF
40	UVS_ON	UVS ON	UVS_ON/OFF → ON
41	UVS_OFF	UVS OFF	UVS_ON/OFF → OFF
42	UVS_RAM_RELOAD	UVS RAM RELOAD	
43	UVS_AUTO	UVS AUTO CONTROL	UVS_CONTROL → AUTO
44	UVS_MANUAL	UVS MANUAL CONTROL	UVS_CONTROL → MAN
47	UVS_G_HV_ENA	UVS G HV ENABLE	UVS_G_HV_ EN/DS → ENA
48	UVS_G_HV_ON	UVS G HV ON	UVS_G_HV_ ON/OFF → ON
49	UVS_G_HV_OFF	UVS G HV OFF	UVS_G_HV_ ON/OFF → OFF UVS_G_HV_ EN/DS → DIS
4B	UVS_PM_HV_ENA	UVS PM HV ENABLE	UVS_PM_HV_ EN/DS → ENA
4C	UVS_PM_HV_ON	UVS PM HV ON	UVS_PM_HV_ ON/OFF → ON
4D	UVS_PM_HV_OFF	UVS PM HV OFF	UVS_PM_HV_ ON/OFF → OFF UVS_PM_HV_ EN/DS → DIS
4E	UVS_PM_H_FIL_ON	UVS PM H FILAMENT ON	UVS_PM_H_FIL → ON
4F	UVS_PM_H_FIL_OFF	UVS PM H FILAMENT OFF	UVS_PM_H_FIL → OFF
50	UVS_PM_D_FIL_ON	UVS PM D FILAMENT ON	UVS_PM_D_FIL → ON
51	UVS_PM_D_FIL_OFF	UVS PM D FILAMENT OFF	UVS_PM_D_FIL → OFF

Table 2.3.6.1*a* (continued) MPM Discrete Command Items (PIM ID = 09)

XY HEX	ITEM	FUNCTION	
80	MST_STBY_ON	MST STANDBY ON	MST_STBY → ON
81	MST_STBY_OFF	MST STANDBY OFF	MST_STBY → OFF
82	MST_EXT_MODE	MST EXTENSION MODE	MST_EXT/RET → EXT
83	MST_RET_MODE	MST RETRACTION MODE	MST_EXT/RET → RET
84	MST_DRV_ON	MST DRIVE ON	MST_DRIVE → ON
85	MST_DRV_OFF	MST DRIVE OFF	MST_DRIVE → OFF
86	MST_HTR_ON	MST HEATER ON	MST_HTR_ON/OFF → ON
87	MST_HTR_OFF	MST HEATER OFF	MST_HTR_ON_OFF → OFF MST_HTR_CNT → MAN
8C	MST_HTR_AUTO	MST HEATER AUTO CONTROL	MST_HTR_CNT → AUTO
8D	MST_HTR_MAN	MST HEATER MANUAL CONTROL	MST_HTR_CNT → MAN
F0	MPM_UVC	MPM UVC	MST_STBY → OFF MGF/PET → OFF UVS_ON/OFF → OFF
F1	MPM_ECC_ERR_DMP	MPM ECC ERROR DUMP	

Table 2.3.6.1*b* MPM Block Command Items (PIM ID = 09)

DC CODE HEX	BC NAME	BC SIZE	BC BIT MSB B0	B1	B2	B3	B4	B5	B6	LSB B7
37	MGF_RNG_SET	1	-	1: X 0: -	1: Y 0: -	1: Z 0: -	-	-	MGF RANGE	
38	MGF_PET_MODE_SET	1	SNS 1:REV 0:NOR	RNG 1:BC 0:AT	MGF RANGE		SWEEP 1:0N 0:OFF	PET EDITION MODE		
45	UVS_OBS_MODE_SET	1	-	-	UVS OBS MODE		-	UVS OBS SUB-MODE		
46	UVS_BOS_LEVEL_SET	1	UVS BOS LEVEL							

Table 2.3.6.1*b* (continued) MPM Block Command Items (PIM ID = 09)

DC CODE HEX	BC NAME	BC SIZE	BC BIT MSB B0	B1	B2	B3	B4	B5	B6	LSB B7
4A	UVS_G_DATA_SET	1	BOS 1:ENA 0:DIS	MCP DISC LEVEL		MCP HV LEVEL				
52	UVS_LIS_PM_DATA_SET	1	LIS AMP GAIN		PM DISC	PM HV LEVEL				
53	UVS_PM_FIL_DATA_SET	1	H-FIL TEMP		D-FIL TEMP		H-FIL SEL		D-FIL SEL	
54	UVS_DATA_SET	5	BOS 1:ENA 0:DIS	MCP DISC LEVEL		MCP HV LEVEL				
			LIS AMP GAIN		PM DISC	PM HV LEVEL				
			H-FIL TEMP		D-FIL TEMP		H-FIL SEL		D-FIL SEL	
			UVS BOS LEVEL							
			-	-	UVS OBS MODE		-		UVS OBS SUB-MODE	
88	MST_STOP_SET	1	-	MTR CURR 1:ENA 0:DIS	MTR TEMP 1:ENA 0:DIS	REEL COUNT 1:ENA 0:DIS	TENT ON 1:ENA 0:DIS	TENT OFF 1:ENA 0:DIS	RET FULL 1:ENA 0:DIS	RET N-FULL 1:ENA 0:DIS
89	MST_REEL_COUNT_SET	1	MTR STOP REEL COUNT							
8A	MST_TEMP_SET	1	MTR STOP MTR TEMP							
8B	MST_CURR_SET	1	MTR STOP MTR CURRENT							
F1	MPM_ECC_ERROR_DUMP	1	DUMP PACKET NUMBER							

2.3.6.2 Telemetry Items

Housekeeping Items

MPM bi-level housekeeping items are listed in Table 2.3.6.2a. Analog housekeeping items for MPM aim at monitoring temperature of sensors, HV levels, and outputs of PSU. They are listed in Table 2.3.6.2b.

Table 2.3.6.2*a* MPM Bi-Level Housekeeping Items

WORD NAME		ITEM	1	0
MPM1 (W122)	B0	ECC 2 BIT ERROR	ACT	NON
	B1	ECC 1 BIT ERROR	ACT	NON
	B2	ECC ENABLE/DISABLE	ENA	DIS
	B3	HTR ENABLE/DISABLE	ENA	DIS
	B4	WDT ERROR	ACT	NON
	B5	WDT ENABLE/DISABLE	ENA	DIS
	B6	CPU RUN	RUN	RST
	B7	CPU ON/OFF	ON	OFF

MPM2 (W123) FLAG1=* FLAG2=0	B0	MGF/PET ON/OFF	ON	OFF
	B1	MGF SENSE REVERSE/NORMAL	REV	NOR
	B2	MGF RANGE BC/AUTO	BC	AUTO
	B3	PET CALIBRATION ON/OFF	ON	OFF
	B4	PET SWEEP ON/OFF	ON	OFF
	B5	MST HEATER ON/OFF	ON	OFF
	B6	MGF RANGE	0 - 3	
	B7			

MPM2 (W123) FLAG1=0 FLAG2=1	B0	MGF/PET ON/OFF	ON	OFF
	B1			
	B2	PET EDITION MODE	0 - 4	
	B3			
	B4	UVS BOS LEVEL D0		
	B5	UVS G DISC LEVEL	0 - 3	
	B6			
	B7	UVS PM DISC LEVEL	0 - 1	

MPM2 (W123) FLAG1=1 FLAG2=1	B0	MST STOP MOTOR TEMPERATURE SET = Set Temperature (°C) + 101	D7 ↑ D0
	B1		
	B2		
	B3		
	B4		
	B5		
	B6		
	B7		

Table 2.3.6.2*a*.(continued) MPM Bi-Level Housekeeping Items

WORD NAME		ITEM	1	0
MPM3 (W124) FLAG1=0 FLAG2=0	B0	UVS ON/OFF	ON	OFF
	B1	UVS G HV ENABLE/DISABLE	ENA	DIS
	B2	UVS G HV ON/OF	ON	OFF
	B3	UVS PM HV ENABLE/DISABLE	ENA	DIS
	B4	UVS PM HV ON/OF	ON	OFF
	B5	UVS PM H FILAMENT ON/OFF	ON	OFF
	B6	UVS PM D FILAMENT ON/OFF	ON	OFF
	B7	FLAG 1	0	

MPM3 (W124) FLAG1=0 FLAG2=1	B0	UVS BOS LEVEL	D7 ↑ | | | ↓ D1
	B1		
	B2		
	B3		
	B4		
	B5		
	B6		
	B7	FLAG 1	0

MPM3 (W124) FLAG1=1 FLAG2=0	B0	UVS ON/OFF	ON	OFF
	B1	MST REEL COUNT	D5 ↑ | | | ↓ D0	
	B2			
	B3			
	B4			
	B5			
	B6			
	B7	FLAG 1	1	

WORD NAME		ITEM	1	0
MPM3 (W124) FLAG1=1 FLAG2=1	B0	MST STOP MOTOR CURRENT SET = Set Current (mA) / 2 + [80]h	D7 ↑ | | | ↓ D1	
	B1			
	B2			
	B3			
	B4			
	B5			
	B6			
	B7	FLAG 1	1	

Table 2.3.6.2*a*.(continued) MPM Bi-Level Housekeeping Items

WORD NAME		ITEM	1	0
	B0	MST STANDBY ON/OFF	ON	OFF
	B1	UVS BOS ENABLE/DISABLE	ENA	DIS
MPM4	B2	FLAG 2	0	
(W125)	B3			
FLAG1=0	B4			
FLAG2=0	B5	UVS G HV LEVEL		
	B6			
	B7			

	B0	MST STANDBY ON/OFF	ON	OFF
	B1	MST HEATER CONTROL	AUTO	MANUAL
MPM4	B2	FLAG 2	1	
(W125)	B3			
FLAG1=0	B4			
FLAG2=1	B5	UVS PM HV LEVEL		
	B6			
	B7			

	B0	MST STANDBY ON/OFF	ON	OFF
	B1	MST TENSION ON/OFF	ON	OFF
MPM4	B2	FLAG 2	0	
(W125)	B3	MST RETRACT FULL/NOT FULL	FULL	NOT_FULL
FLAG1=1	B4	MST REEL COUNT D6		
FLAG2=0	B5	MST DRIVE ON/OFF	ON	OFF
	B6	MST RETRACT	RET	NON
	B7	MST EXTRACT	EXT	NON

	B0	MST STANDBY ON/OFF	ON	OFF
	B1	MST HTR CONTROL AUTO/MANUAL	AUTO	MAN
MPM4	B2	FLAG 2	1	
(W125)	B3	MST STOP MOTOR CURRENT SET D0		
FLAG1=1	B4	MST OVERLOAD	OVLD	NON
FLAG2=1	B5	MST DRIVE ON/OFF	ON	OFF
	B6	MST TENSION MONITOR	0:ON 1:ON_OFF 2:ON_OFF_ON	
	B7			

Table 2.3.6.2*a*.(continued) MPM Bi-Level Housekeeping Items

WORD NAME		ITEM	1	0
MPM5 (W126) FLAG1=0 FLAG2=0	B0	UVS LIS GAIN		
	B1			
	B2	UVS OBSERVATION MODE		
	B3			
	B4	UVS CONTROL MANUAL/AUTO	MAN	AUTO
	B5	UVS OBSERVATION SUB MODE		
	B6			
	B7			

MPM5 (W126) FLAG1=0 FLAG2=1	B0	UVS H FILAMENT TEMPERATURE		
	B1			
	B2	UVS D FILAMENT TEMPERATURE		
	B3			
	B4	UVS H FILAMENT SELECT		
	B5			
	B6	UVS D FILAMENT SELECT		
	B7			

MPM5 (W126) FLAG1=1 FLAG2=0	B0	MST OVER CURRENT STOP ACT/NON	ACT	NON
	B1	MST OVER CURRENT STOP ENABLE/DISABLE	ENA	DIS
	B2	MST OVER TEMPERATURE STOP ENABLE/DISABLE	ENA	DIS
	B3	MST REEL COUNT STOP ENABLE/DISABLE	ENA	DIS
	B4	MST TENSION ON STOP ENABLE/DISABLE	ENA	DIS
	B5	MST TENSION OFF STOP ENABLE/DISABLE	ENA	DIS
	B6	MST RETRACT FULL STOP ENABLE/DISABLE	ENA	DIS
	B7	MST RETRACT NOT FULL STOP ENABLE/DISABLE	ENA	DIS

MPM5 (W126) FLAG1=1 FLAG2=1	B0	MST STOP REEL COUNT SET	D7 ↑		↓ D0
	B1		
	B2		
	B3		
	B4		
	B5		
	B6		
	B7		

Table 2.3.6.2*b*. MPM Analog Housekeeping Items

ADDR.	WORD	ITEM		UNIT	RANGE MIN. MAX.	A*x + B A B
8010	MPM-A-1 W373	MGF-E-T	MGF-E TEMPERATURE	°C	-62.15 78.35	0.551 -62.154
8011	MPM-A-2 W374	MGF-S-T	MGF-S TEMPERATURE	°C	-51.67 54.67	0.417 -51.667
8012	MPM-A-3 W375	PET-VF	PET-VF	V	0.02 5.09	0.020 0.024
8013	MPM-A-4 W376	MST-MTR-T	MST MOTOR TEMPERATURE	°C	-101 154	1 -101
8014	MPM-A-5 W377	UVS-G-T	UVS-G TEMPERATURE	°C	-120.48 70.29	-0.748 70.292
8015	MPM-A-6 W378	UVS-PM-H-T	PM-H CELL TEMPERATURE	°C	-119.05 70.42	-0.743 70.421
8016	MPM-A-7 W379	UVS-PM-D-T	PM-D CELL TEMPERATURE	°C	-119.53 69.60	-0.742 69.605
8017	MPM-A-8 W380	UVS-PM-T	UVS-P TEMPERATURE	°C	-119.40 69.96	-0.743 69.958
8018	MPM-A-9 W381	UVS-G-HV	UVS-G HV	V	-31.96 5153.98	20.337 -31.958
8019	MPM-A-10 W382	UVS-P-HV	UVS-P HV	V	10.40 5075.67	19.864 10.405
801A	MPM-A-11 W383	UVS-PM-DFIL	D FILAMENT CURRENT	mA	-0.54 260.02	1.02 -0.54
801B	MPM-A-12 W384	UVS-PM-HFIL	H FILAMENT CURRENT	mA	-2.27 261.46	1.03 -2.27
801C	MPM-A-13 W385	MPM +5V	+5V	V	0.16 10.20	0.039 0.159
801D	MPM-A-14 W386	MPM +12V	+12V	V	-0.14 24.63	0.097 -0.140
801E	MPM-A-15 W387	MPM -12V	-12V	V	-33.51 -0.34	-0.130 -0.336
801F	MPM-A-16 W388	MPM +29V	+29V	V	-0.30 59.77	0.236 -0.300
05 8018	MPM-I W234	MPM-I	MPM CURRENT	A	0.00 5.00	0.0196 0.000
04 F834	MST-T W299	MST-M-T	MST TEMPERATURE	°C	-49.41 80.59	0.510 -49.410

Mission Data

MPM mission data have four types; MISC packet, MST packet, MGF/PET packet, and UVS packet. The data type is distinguished by Data Type ID which is upper 4 bits of secondary header (W4) in each packet. The Data Type ID of each packet type is shown in Table 2.3.6.2c.

The packet rate of each type depends on the telemetry format, edition bit rate and UVS status. Data format and resolution depend on the packet rate. The data format of each data type is shown in Table 2.3.6.2d. Some of housekeeping items are also seen in mission data.

Table 2.3.6.2*c*. MPM Data Type ID

Data Type ID	Packet Type
0	MISC
1	MST
2	MGF/PET
3	UVS

Table 2.3.6.2*d*. MPM Mission Packet Format

0 - MISC Packet

W0	Packet ID = (10)h	
W1	DHU TI (Upper 8 bit)	
W2	DHU TI (Middle 8 bit)	
W3	DHU TI (Lower 8 bit)	
W4	Data Type ID (= 0)	Rate ID
W5	CPU Status	
W6	Packet TI (Upper 8 bit)	
W7	Packet TI (Middle 8 bit)	
W8	Packet TI (Lower 8 bit)	
W9 | W435	Command History, MGF Offset Base for Composite ECC Error Data, Register Information	

2 - MGF/PET Packet

W0	Packet ID = (10)h	
W1	DHU TI (Upper 8 bit)	
W2	DHU TI (Middle 8 bit)	
W3	DHU TI (Lower 8 bit)	
W4	Data Type ID (= 2)	Rate ID
W5	MGF/PET Status	SEQ #
W6	Packet TI (Upper 8 bit)	
W7	Packet TI (Middle 8 bit)	
W8	Packet TI (Lower 8 bit)	
W9	MGF-E Temperature(MPM-A-1)	
W10	MGF-S Temperature(MPM-A-2)	
W11 | W435	MGF/PET Data	

Table 2.3.6.2*d*. (continued) MPM Mission Packet Format

1 - MST Packet

W0	Packet ID = (10)h	
W1	DHU TI (Upper 8 bit)	
W2	DHU TI (Middle 8 bit)	
W3	DHU TI (Lower 8 bit)	
W4	Data Type ID (= 1)	Rate ID
W5	MST Status	
W6	Packet TI (Upper 8 bit)	
W7	Packet TI (Middle 8 bit)	
W8	Packet TI (Lower 8 bit)	
W9	Stop Enable (Same as MPM5)	
W10	HTR-ON/OFF | Tension Monitor	
W11	Stop Reel Count	
W12	Stop Motor Temperature	
W13	Stop Motor Current	
W14	MGF-E Temperature(MPM-A-1)	
W15	MST-M Temperature(MPM-A-4)	
W16 | W430	Reel Count, Motor Current, Phase Counter (Reset by IP)	
W431	Spare	
W432 | W435	ECC Error Count, CPU Duty	

3 - UVS Packet

W0	Packet ID = (10)h	
W1	DHU TI (Upper 8 bit)	
W2	DHU TI (Middle 8 bit)	
W3	DHU TI (Lower 8 bit)	
W4	Data Type ID (= 3)	0
W5	SEQ #	
W6	Packet TI (Upper 8 bit)	
W7	Packet TI (Middle 8 bit)	
W8	Packet TI (Lower 8 bit)	
W9	UVS Status	
W10	OBS-Mode/OBS-Sub-Mode	
W11	UV Status	
W12	PM LIS Status	
W13	BOS Level	
W14	Filament Status	
W15	MCP HV Monitor	
W16	PM HV Monitor	
W17	H FIL Monitor	
W18	D FIL Monitor	
W19	# of Spins for Data Stacking	
W20 | W435	UVS Data	

2.3.7 Particular Cares Required

Expected magnetic field intensity in the Mars environment is quite small (a few tens of nT), therefore, the MGF investigators have requested of other subsystems to take considered action in their design, that is to suppress stray magnetic field from each unit. The specifications and the design standard for magnetic field interference are given in Section 12.2 of PLANET-B INTERIM REPORT.

The UVS instrument has critical elements which should be taken particular cares in handling. The environmental and handling requirements are listed below.

- Surrounding humidity: < 50 %
- Purge of optics with high-purity N_2 gas until launch
- Removal of the caps at the end of the baffles of UVS-G and UVS-P as late as possible prior to launch
- Clean gloves used

2.3.8 Appendix : MGF Science Team

Principal Investigator :		
(~ Feb. 1998)	Tatsundo Yamamoto	ISAS
(Mar. 1998 ~)	Ayako Matsuoka	ISAS
Co-Investigator :	Ryoichi Fujii	STE Laboratory, Nagoya University
	Susumu Kokubun	STE Laboratory, Nagoya University
	Kazuo Shiokawa	STE Laboratory, Nagoya University
	Toshio Terasawa	University of Tokyo
	Takeshi Iijima	University of Tokyo
	Kanji Hayashi	University of Tokyo
	Masaru Kono	University of Tokyo
	Tomoko Nakagawa	Tohoku Institute of Technology
	Fumio Tohyama	Tokai University
	Yutaka Tonegawa	Tokai University
	Tohru Sakurai	Tokai University
	Kiyoshi Maezawa	Nagoya University
	Tohru Araki	Kyoto University
	Toshihiko Iyemori	Kyoto University
	Toyohisa Kamei	Kyoto University
	Masahiko Takeda	Kyoto University
	Hideo Tsunakawa	Tokyo Institute of Technology
	Yoshimori Honkura	Tokyo Institute of Technology
	Tsugunobu Nagai	Tokyo Institute of Technology
	Masaki Matsushima	Tokyo Institute of Technology
	Kiyohumi Yumoto	Kyushu University
	Manabu Shinohara	Kyushu University
	Ousuke Saka	Kurume National College of Technology
	Mario H. Acuña	NASA/GSFC

We all MGF members miss Professor Tatsundo Yamamoto who used to be PI of MGF team.

2.4 Mars Imaging Camera (MIC)

Principal Investigator :	Tadashi Mukai	Kobe University
Co-Investigator :	Tatsuaki Hashimoto	ISAS
	Jun'ichiro Kawaguchi	ISAS
	Takeshi Imamura	ISAS
	Masato Nakamura	University of Tokyo
	Sho Sasaki	University of Tokyo
	Kei Kurita	University of Tokyo
	Yutaka Abe	University of Tokyo
	Akiko M.Nakamura	Kobe University
	Hiroshi Ishimoto	Kobe University
	Kyosuke Iwasaki	Kyoto Gakuen University
	Tokuhide Akabane	Kyoto University
	Yasunori Narumi	Kyushyu Tokai University
	Francois Costard	CNRS, France
	Jacques Blamont	CNES, France
Manufacturer :	NEC Corporation	

2.4.1 Science Objectives

Since PLANET-B takes a very elliptic retrograde orbit, Mars Imaging Camera (MIC) can take global images of Mars. MIC can monitor changes of global atmospheric conditions on Mars: e.g., dust storm growth, change of atmospheric opacity due to dust and thin hazy clouds, change of cloud features, growth and retreat of polar caps, development and thickness of polar hood. In addition, the planned orbits will make close encounters of PLANET-B with Phobos and Deimos several times during the mission lifetime, and consequently, MIC can observe the shapes and the surface structures of two satellites in detail.

When PLANET-B is close to Mars near its periapsis, MIC can observe the planetary limb in spatial resolution as high as 2 km, enough for investigating the vertical atmospheric structure. In the following, main scientific objectives will be summarized based on three broad categories: geology, meteorology, and Martian satellites.

(1) geologic objectives:

- The study of a wavelength dependence of the scattering properties of surface area, e.g. the bright areas (Arabia, Tharsis) and the dark areas (Syrtis Major, Aurora Sinus).
- The study of color variation in the rim of the polar caps.
- The study of characterization of rampart craters and terrain softening as a key for underground water distribution, volcanic and hydrothermal study on Arsia Mons, stereographic pictures of canyon systems, and relation between aeolean morphology and present wind system.

(2) meteorologic objectives:

- The study of transient meteorological phenomena, i.e. dynamics of clouds and dust storms, occurrence of haze and fog.
- The study of seasonal meteorological phenomena, i.e. growth and contraction of the polar caps.

(3) Martian satellite objectives:

- The study of the shape and the surface structure of Phobos / Deimos, e.g. origin of the grooves on Phobos, a size/spatial distribution of craters on the surface of both satellites.
- The search for the dust rings along the orbits of Phobos / Deimos.

2.4.2 Instrument Specifications

2.4.2.1 Hardware Specifications

Since PLANET-B is a spin-stabilized spacecraft, MIC uses three-color linear CCD aligned with elevation (i.e. parallel to the spin axis) direction and scans azimuth (i.e. around spin axis) direction using spacecraft rotation. Hardware specifications of MIC are shown in Table2.4.2-1. MIC can take a picture in every rotation of the spacecraft. To take a full-color image, three rotations (about 24 sec) are required because MIC has an electronics circuit for only one CCD.

MIC has a large total FOV (360 deg × 54.2 deg) and takes an image of designated area within it. Because of the limitation of the image memory, maximum size of an image is 23.6 deg × 23.1 deg. Azimuth angle of an image is designated by commands as the imaging-start phase of the spacecraft rotation and the number of lines to be taken. Elevation angle is designated by commands as the imaging-start pixel of CCD and the number of pixels to be taken.

The Start phase is defined as the phase angle from the Index Pulse of the spacecraft which nominally coincides to Sun Pulse timing. Because the phase angle is actually commanded as the time from IP, azimuth angle is affected by the spacecraft spin rate. The time from IP can be set at intervals of 65.5ms (= 2.95 deg @7.5rpm).

The start pixel of CCD can be set at intervals of 128 pixels (about 2.7 deg).

Size of an image can be selected from alternatives listed below.

Azimuth	256,	512,	1024	lines
	(5.90,	11.8,	23.6	deg @ 7.5rpm)
Elevation	256,	512,	1024	pixels
	(5.85,	11.7,	23.1	deg @ the center of FOV)
	(4.83,	10.0,	21.3	deg @ the edge of FOV)

Alternatives to be chosen concerning Color are:

RED, GREEN, BLUE

Spectral bands of each color are shown in Fig.2.4.2-1.

Alternatives of Ampgain are as follows:

GAIN0, GAIN1, GAIN2, GAIN3

Coefficients of each Ampgain are summarized in Table2.4.2-2.

Table2.4.2-1 Hardware specifications of MIC

Optics	Aperture	21.4 mm
	Focal length	30 mm
	F number	F1.4
CCD	linear 3 color CCD (Kodak KLI-4103)	
	4104 pixels (only 2560 pixels are used)	
	Responsivity RED	9 V/μJ/cm^2 @ 650 nm
	GREEN	8 V/μJ/cm^2 @ 550 nm
	BLUE	4 V/μJ/cm^2 @ 450 nm
	Pixel pitch	12μm
	Integration time	0.512 ms
Total Field Of View *	Azimuth	360 deg
	Elevation	54.2 deg
Pixel Resolution	Azimuth	82.9 arcsec @ 7.5 rpm
	Elevation	82.5 arcsec @ the center of FOV
		65.4 arcsec @ the edge of FOV
A/D conversion	8 bit, 6 MHz	
Image memory	1 Mbyte	
Image compression module	JPEG revision 5 algorithm	
	Compression range 3 to 100	
	Compression speed 3.4 Mpels/s @ 12 MHz	

* The total area among which an imaging area can be taken by commands.

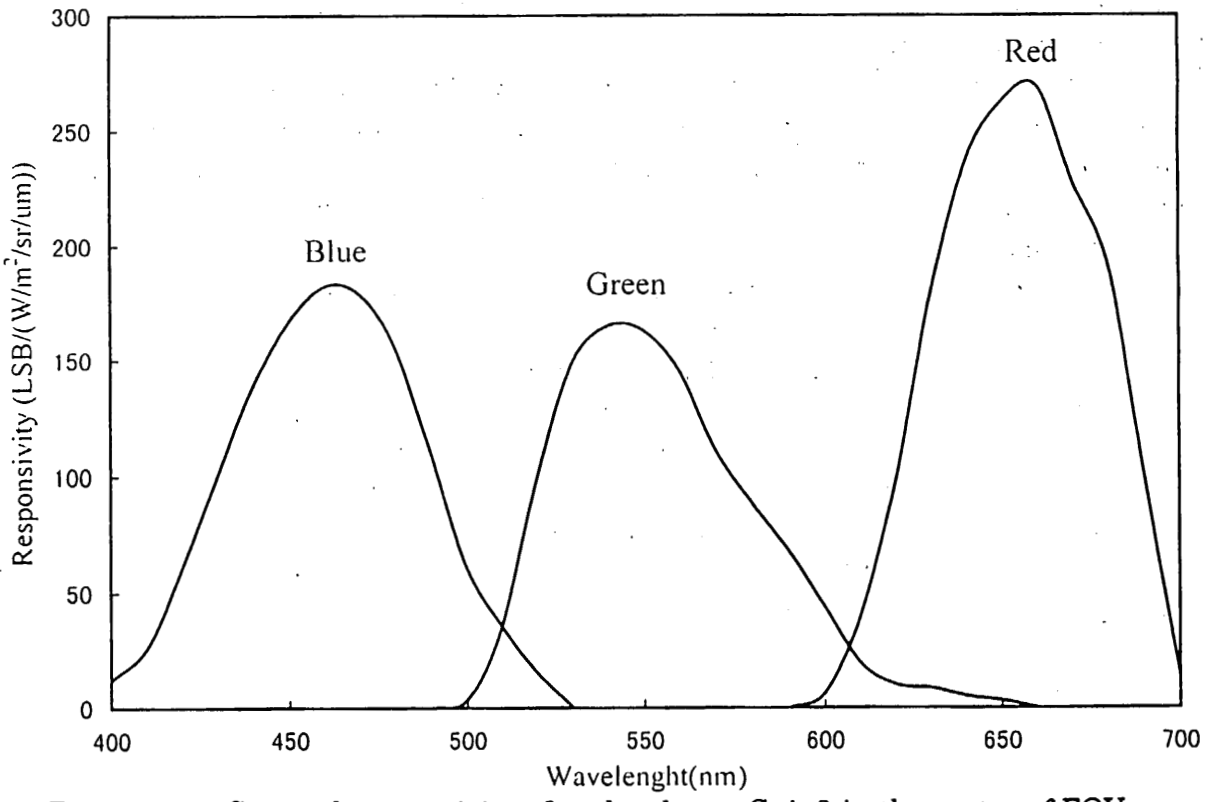

Fig.2.4.2-1 Spectral responsivity of each color at Gain3 in the center of FOV

Table2.4.2-2 Maximum radiance of each ampgain

	radiance ($W/m^2/sr/\mu m$)		
	Blue	Green	Red
GAIN0	166	170	145
GAIN1	61	64	54
GAIN2	36	35	30
GAIN3	18	18	15
Reference			
When albedo=1 @1.0AU	621	615	534
When albedo=1 @1.4AU	317	314	272

While imaging, MIC converts output voltage of CCD into 8 bits digital signal with A/D converter and writes digital data into the image memory. After imaging, nominally ICM (Image Compression Module) is activated. It reads image data from the image memory, executes data compression, and writes compressed data into the image memory again. MIC has three imaging modes concerning the usage of the image compression.

1. Store only compressed data. Original raw image data is deleted.
2. Store both compressed and original raw image data.
3. Store only raw image date, that is, ICM is not activated.

As image compression parameters, quantization matrix and scale factor can be specified. There are two quantization matrix tables in ICM and a user can select one of two pre-loaded tables by the parameter of MODE_SET command (i.e. MALGO). Quantization scale factor corresponds to image compression ratio. It is also specified by MODE_SET command.

Both compressed and uncompressed images are stored in the image memory until telemetry mode becomes "MIC MODE"(Format-14). While "MIC MODE", image data are sent to DHU (Data Handling Unit) through PIM (Peripheral Interface Module).

MIC has three hardware modes as follows:

a. Command Mode

MIC takes images according to the imaging parameters which are set by commanding from the ground or onboard software. MIC starts imaging from the designated phase of the spacecraft rotation and the designated pixel of CCD and stops imaging after the designated size of image has been taken. Then MIC hardware sends INT-5 interrupt to SI-CPU.

When successive imaging is designated, MIC software sets the next imaging parameter to the hardware and continues above-mentioned sequence.

b. Auto Mode

In this mode, MIC detects a bright object and takes an image of it automatically. That is, MIC searches a pixel which is brighter than the threshold level and takes image of neighborhood of the pixel if the number of bright pixel becomes more than 3 pixels in 8 pixels. Since azimuth and elevation angles are chosen as the unit of 128 lines and pixels, respectively, the bright object does not appear at the exact center of the image. The size of

the image is fixed to 512 lines × 512 pixels. Within imaging parameters, only Color, Threshold, Ampgain and image compression parameters are valid in this mode. When an imaging ends, MIC hardware sends INT-5 interrupt to SI-CPU. When successive imaging is designated, MIC software sets the next imaging parameters to the hardware and continues above-mentioned sequence. If MIC can not find any bright object, it remains in this mode until STOP command is received.

c. Oneshot Mode

This mode is used for CCD test on ground. An image of 2560 pixels × 8 lines is taken by TAKE(*) command and saved into the image memory. When the imaging ends, MIC hardware sends INT-5 interrupt to SI-CPU.

(*) As the BC parameter, only one imaging is valid.

The state transition diagram of MIC hardware is shown in Fig.2.4.2-2.

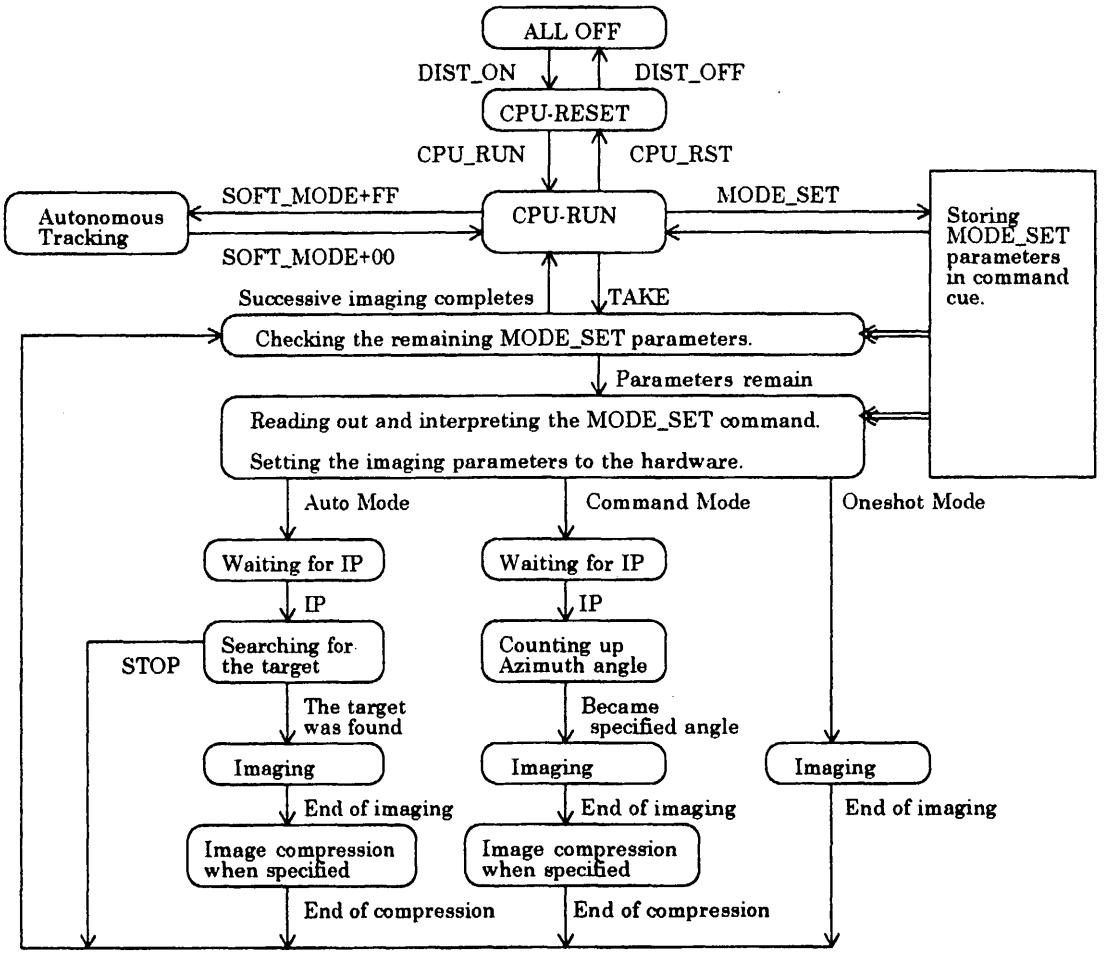

Fig.2.4.2-2 State transition diagram of MIC

2.4.2.2 Software functions overview

The software running on SI-CPU controls MIC hardware. It has two modes as follows:

A. Manual Mode

The software receives commands form DHU and transfers them to MIC hardware. The software has the capability of storing commands in cue, that is, to cope with limitation of DHU function, it can hold some MODE_SET commands (Max 64) and send them to MIC hardware at the proper instance. Detail of the command-cue function is described in 2.4.2.3.

B. Software-control Mode (Autonomous-tracking Mode)

The software tracks a small body such as Phobos or Deimos using orbit estimation of them. The software detects the direction of the target by image processing, estimates the direction of it at the next exposure (about 8 sec later), and generates proper commands to control MIC hardware.
By repeating above-mentioned sequence, MIC continues tracking the target until this mode is terminated.

The software mode is switched by the 1 byte argument of SOFT_MODE command. In both Manual Mode and Autonomous-tracking Mode, the software handles telemetry data. HK status of MIC is output through PIM in every telemetry mode. Image data and some kinds of MIC status are output only when telemetry mode is "MIC_MODE". Image data are output in the order from the oldest to the latest, until all images are downlinked. If telemetry mode becomes other mode, image output is automatically terminated.

The software also manages image memory. It controls write and read pointer of memory access. A pointer for image downlink and a pointer for image compression can be moved by commands.

The information about image memory is preserved no matter how CPU is running, stopping or re-starts, while the cue of MODE_SET commands is cleared when CPU re-starts or UVC command is received. To initialize the control information of image memory, INIT command is used.

2.4.2.3 Manual Mode

This mode is nominally used. When the software receives TAKE command, it sets imaging parameters which was specified by MODE_SET commands in advance to the hardware and commands the hardware to start imaging. Then the hardware waits IP and starts an imaging according to the imaging parameters. When COMMAND_MODE is specified in MODE_SET command, the hardware take a picture of designated angle and size. In case that AUTO MODE is specified, the hardware searches a bright object and take its picture automatically as described in 2.4.2.1. As the 1 byte argument of TAKE command, the number of successive imaging is designated and the software repeats the sequence mentioned above according to the number. That is, after an imaging ends, the hardware generates INT-5 interrupt to SI-CPU and the software picks up the next imaging parameters from MODE_SET commands cue, sets the new parameters to the hardware, and commands the hardware to start imaging. In the successive imaging mode, the hardware counts the time from IP continuously and can

take a picture per rotation. On the other hand, when single imaging is specified, the hardware waits first IP before it starts counting the time from IP.

The software can store 64 MODE_SET commands in the cue. Therefore, maximum of 64 successive exposures is possible. If the argument of TAKE command exceeds the number of MODE_SET commands in the cue, MIC returns Command_ERR status and terminates the successive imaging mode.

2.4.2.4 Software-control Mode (Autonomous Tracking Mode)

This mode is prepared for Phobos or Deimos encounter. This mode is activated by SOFT_MODE command followed by "FF" as the BC parameter. The outline of autonomous-tracking algorithm is shown in Fig.2.4.2-3. Since the algorithm requires some information about a target, TRK_PARAM command must be sent before the software starts tracking. MODE_SET command is also required to specify Color, Ampgain, Threshold and image compression parameters. It starts tracking by TRK_START command and calculates some imaging parameters such as azimuth and elevation angle according to the orbit estimation. After imaging, the software calculates the direction of the center of the target, that is, the binarization circuits extract the pixel brighter than the Threshold level and the software calculates the center of the bright object. To estimate the target motion, modified Kalman filter is installed in the software.

This mode is terminated by SOFT_MODE command followed by "00" as the BC parameter.

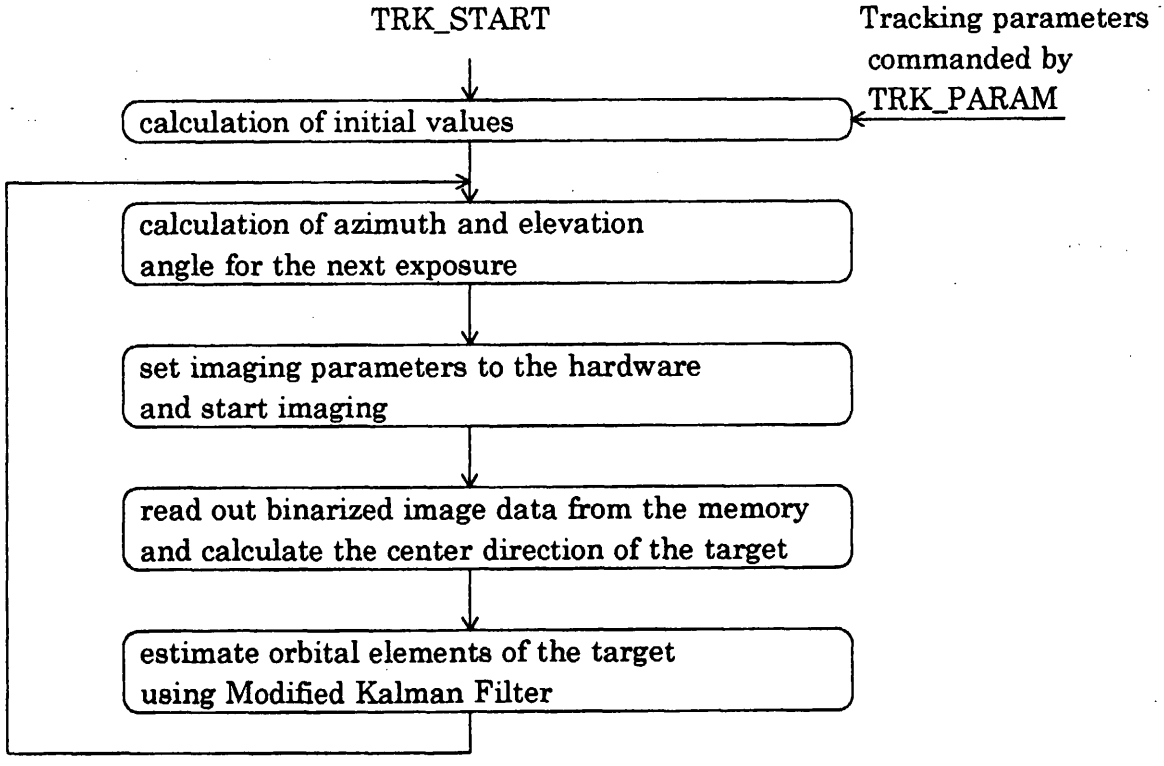

Fig.2.4.2-3 The outline of autonomous tracking algorithm

2.4.2.5 Memory-pointer operation function

The software controls memory read and write pointer automatically. While imaging, DMA controller writes image data to the memory. When imaging ends, the software sets WP (memory write pointer) to the end of the image in order that next image can be written just after the latest image. RP (memory read pointer) is used for telemetry output. The software reads the image data from the address pointed by RP. After an image is downlinked while "MIC_MODE", RP moves to the head of the next image. The image memory is used as a ring-buffer. When WP catches up with RP, irrespective of whether images are already downlinked or not, they are over-written from the oldest. When images which are not yet downlinked are over-written, the software reports Overwrite_ERR.

RP is also controlled by commands from the ground. RP_BACK command moves RP to the previous image, while RP_FORW command moves RP to the next image. RP_BACK is used to re-downlink images which are already output. On the other hand, RP_FORW is used to skip downlink of images. When RP reaches to the end of all images or to the head of all valid (i.e. not overwritten) images, the software reports RP_ERROR and RP stays the end or the head, respectively.

CP (compression read/write pointer) is nominally at the same address as WP after imaging without image compression or imaging with both compressed and raw data. When image compression without raw image is specified, CP moves to the end of the compressed image, while WP moves once to the end of the raw image just after imaging and after image compression, it coincides with CP.

CP is also controlled by commands from the ground. CP_BACK command moves CP to the previous image. When COMPRESS command is received, the software compresses an image which CP points. If CP points an image which is already compressed, the software does nothing and reports Compress_ERR. After COMPRESS command is executed, CP returns to the nominal position described above. CP also returns to the nominal position by CP_RESET command.

2.4.3 Instrument Configuration

MIC consists of

1) CCD-ASSY : lens, hood, CCD and pre-amplifiers.
2) ASP1-PWB : Analog circuits such as amplifiers, A/D converter, etc.
3) ASP2-PWB : Analog circuits such as CCD driver, etc.
2) DSP-PWB : Digital circuits such as command decoder, image memory, etc.
3) JPEG-PWB : Image compression module, PIM interface, etc.
4) SICPU-PWB : CPU for hardware control including 512kbytes SRAM, etc.
5) PSU : DC/DC converter for MIC power supply.

PWB : Print Wiring Board

Configuration of MIC is shown in Fig.2.4.3-1.

2.4.3.1 CCD-ASSY

CCD-ASSY consists of radiation hardened lens system, a tri-linear CCD image sensor, pre-amplifier and their support assembly including hood. Optics are realized by 9 group 13 lens system. As an image sensor, a tri-color 4104 pixels linear CCD is used. Among 4104 pixels, only 2560 pixels are used and other pixels are masked.

The hood whose sun avoidance angle is 49 deg from the center of FOV is made by Aluminum with conductive black coat.

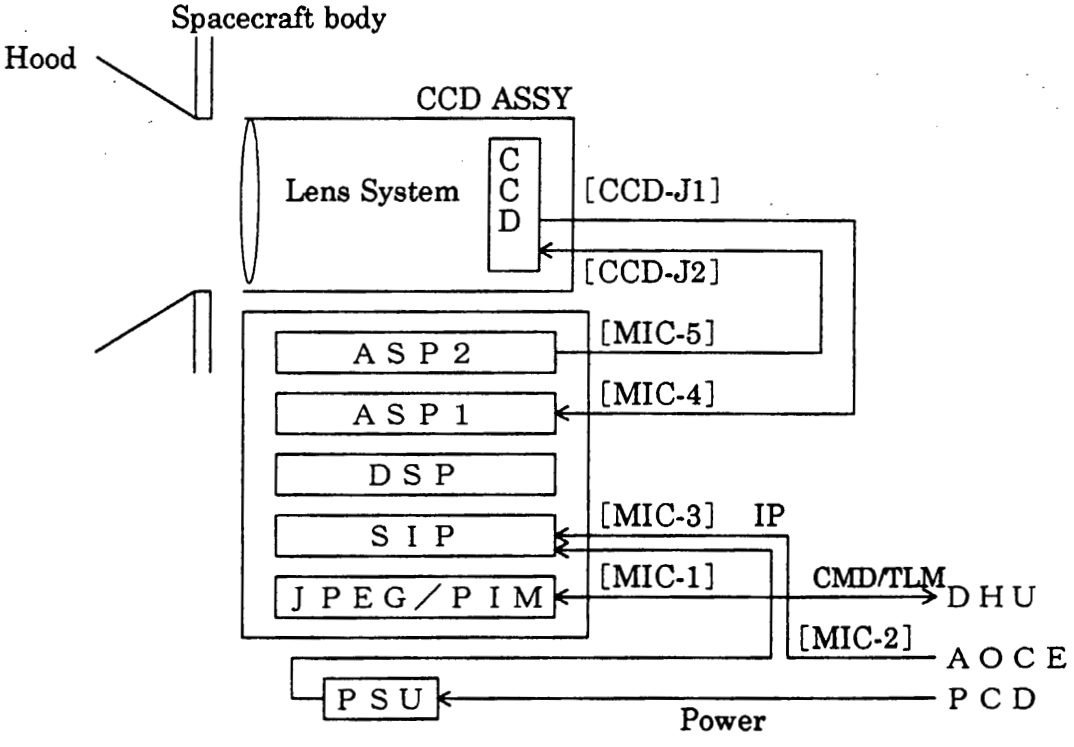

Fig.2.4.3-1 Configuration of MIC

2.4.3.2 ASP1-PWB, ASP2-PWB

ASP1-PWB and ASP2-PWB are analog circuits of MIC electronics. They control the tri-linear CCD, derive output voltage of CCD and perform A/D conversion.

The multiplexer chooses one among the three output signals generated from RED, GREEN, and BLUE CCD, respectively. The field through level of this signal is clumped to the desirable level in order to avoid the fluctuation of the offset level. Then, the signal is converted to 8 bits digital signal by A/D converter.

2.4.3.3 DSP-PWB

DSP-PWB is a digital circuits of MIC electronics. It receives digital data from ASP1-PWB and transfers to FIFO (First In First Out) memory. The data select controller chooses the data of specified pixels, and transfers them from FIFO to the image memory. As a result, data from CCD is written in the memory directly in quasi real time. The memory consists of 1 Mbyte SRAM and the capacity of it corresponds to a 1024×1024 pixels monoclome image.

After whole image is taken, the data in the memory are read out and transferred to ICM (Image Compression Module) on JPEG-PWB. The image data compressed by ICM is rewritten to the same memory.

DSP-PWB also has command decoder, telemetry interface, CCD drive signal generator, binarization circuits and the 32 kbytes memory for binarized data. The binarization circuits are boarded for the speed-up of image processing.

The block diagram of ASP1-, ASP2-, and DSP-PWB is shown in Fig.2.4.3-2.

2.4.3.4 JPEG-PWB

JPEG-PWB consists of ICM and other peripheral circuits. ICM is supplied by CNES (Centre National d'Etudes Spatiales) under international cooperation. It uses JPEG revision 5 which is a standard non-reversible compression algorithm. Compression rate is expected from one third to twentieth. Maximum data conversion rate of ICM is 3.4 Mpels/s. Since data transfer rate between the image memory and ICM is limited to 1.5 Mbyte/s, however, actual image compression speed is about 0.7 sec/1Mbyte. Block diagram of JPEG-PWB is shown in Fig.2.4.3-3.

PIM (Peripheral Interface Module) which is used to communicate with DHU and other peripherals are also boarded on JPEG-PWB.

2.4.3.5 SICPU-PWB

SICPU-PWB is a standard CPU board developed for scientific instruments of PLANET-B spacecraft. It consists of a CPU (i80C86 8MHz), 512 kbytes SRAM with ECC, Programmable Timer, Interrupt Controller, 2 kbytes Dual Port RAM which is used for data transmission between CPU and PIM, etc.

Software on SI-CPU performs camera control, management of the image memory, command and telemetry handling, and also estimation of the orbit of a target in Autonomous Tracking Mode.

Block diagram of SICPU-PWB is shown in Fig.2.4.3-4.

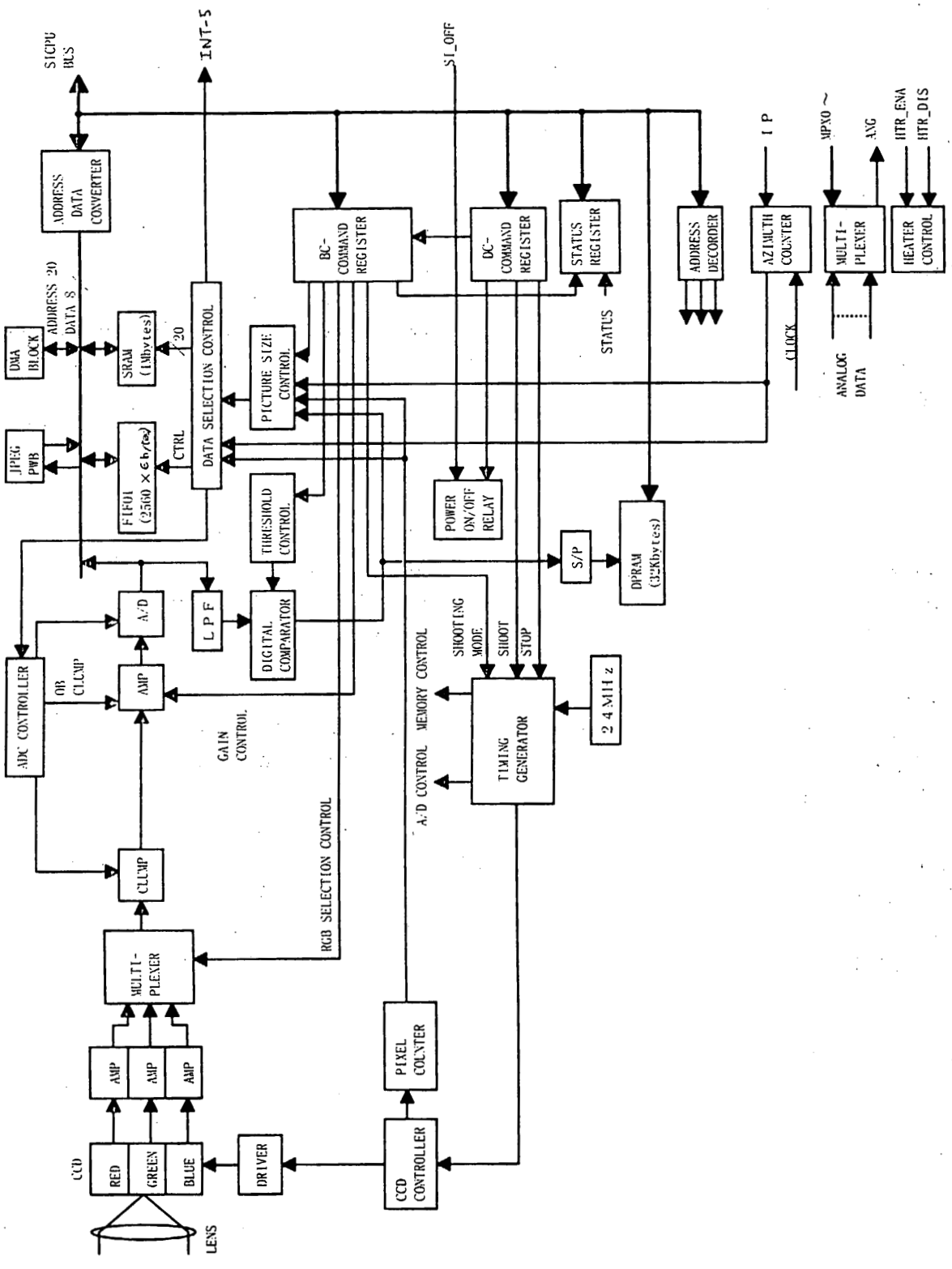

Fig.2.4.3-2 Block diagram of CCD, ASP1, ASP2, DSP-PWB

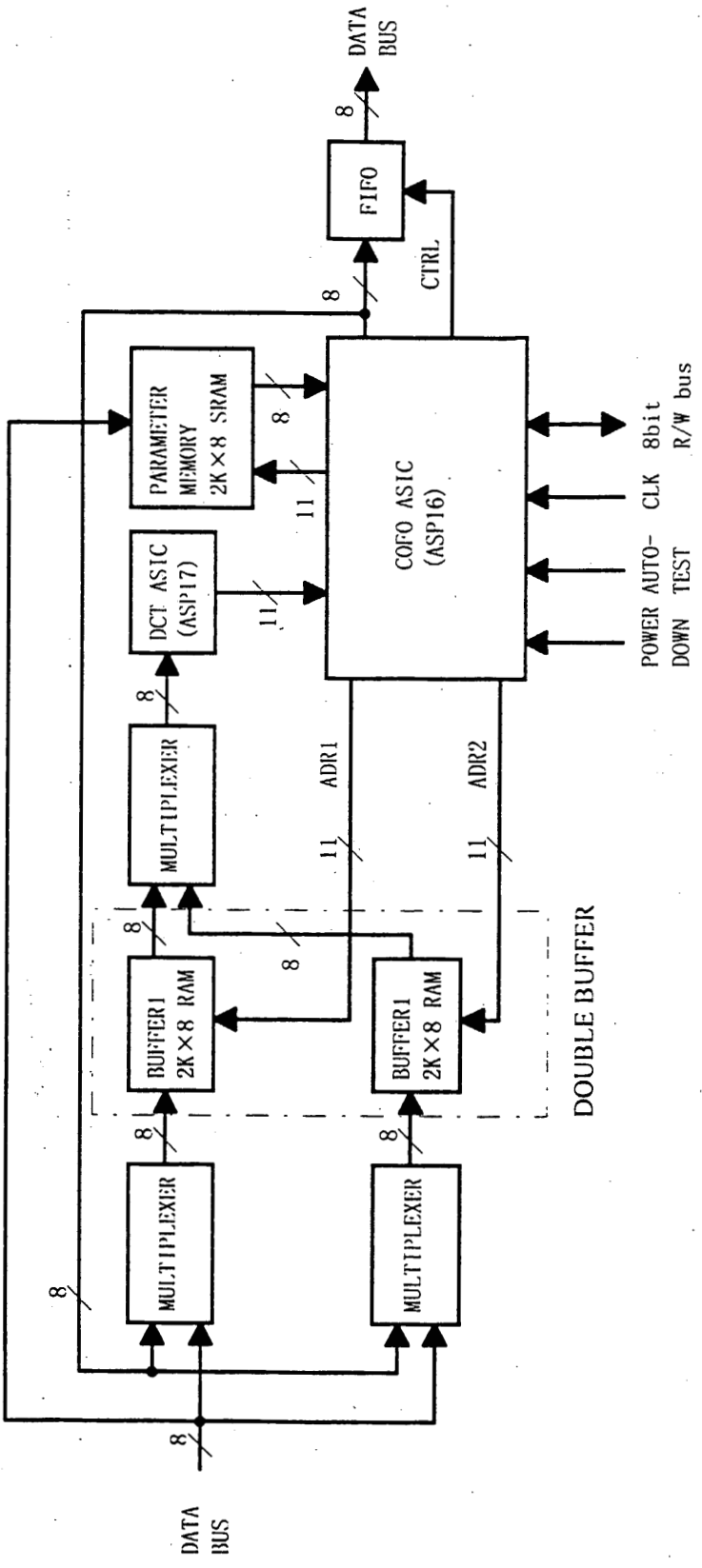

Fig.2.4.3-3 Block diagram of JPEG-PWB

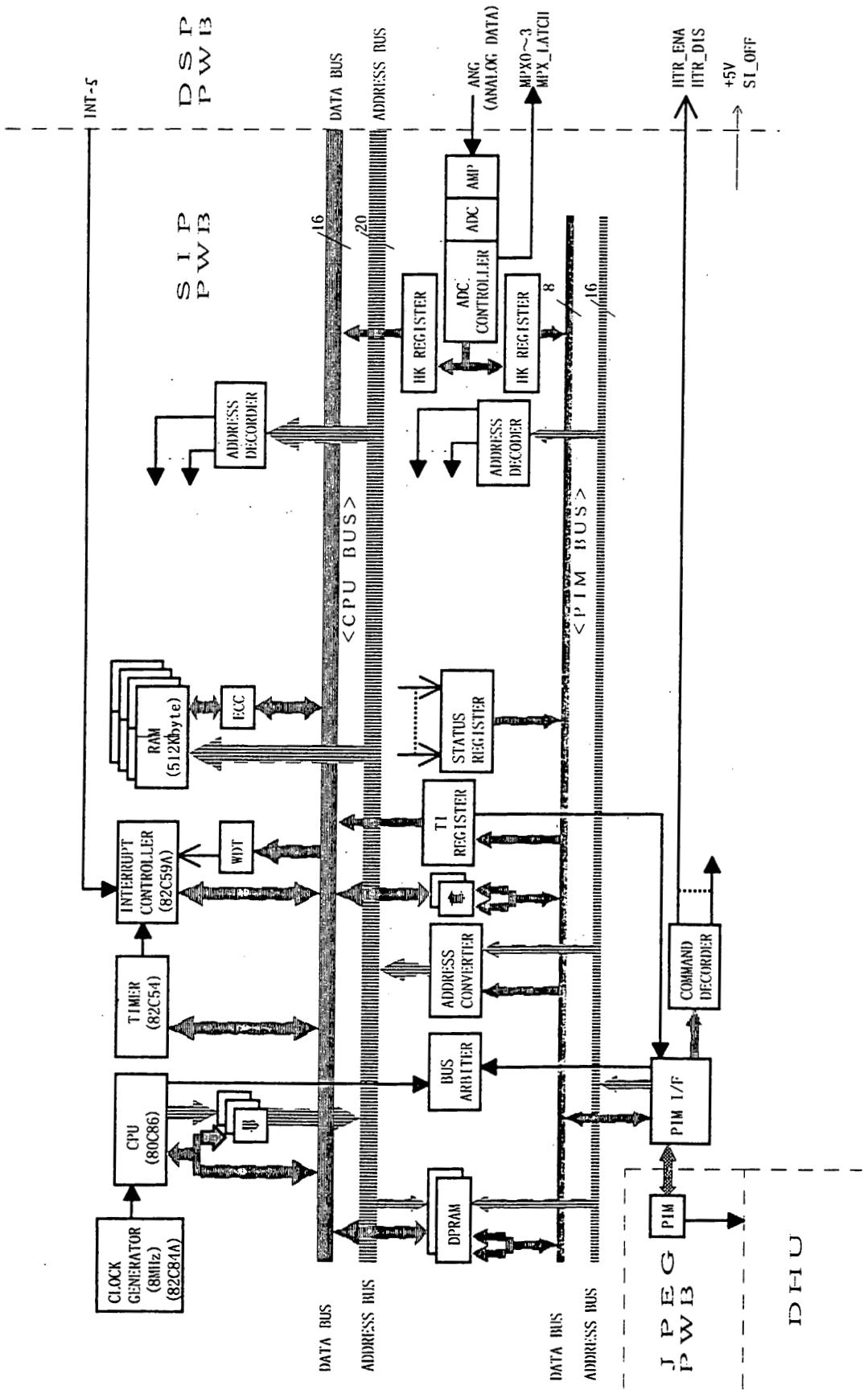

Fig.2.4.3-4 Block diagram of SICPU-PWB

2.4.4 Operation

2.4.4.1 Procedure for MIC turn-on

To turn on MIC, first of all, distributor for MIC must be switched on by the following command.

PCD_DIST_MIC_ON

Then, heater control and current limiter are switched on.

MIC_HTR_ENA
MIC_LD_ENA

Before loading the software to the CPU, these commands must be sent.

MIC_ECC_DIS
MIC_WDT_DIS

After loading the software, the CPU is made to run by

MIC_CPU_RUN

After the CPU has completed memory patrol, the following commands can be sent and nominal observation mode is established.

MIC_ECC_ENA
MIC_WDT_ENA
MIC_INIT

Since INIT command clears all of the image memory, it should be used only when no picture exists in the image memory, for example, just after the distributor is switched on.

2.4.4.2 Comparison among hardware and software modes

MIC has several hardware and software modes to meet various mission objectives. They are summarized in Table2.4.4-1.

According to each mode, some commands are valid and others are invalid, as summarized in Table2.4.4-2.

Table2.4.4-1 Modes of MIC

Mission Objectives	Software Mode	Hardware Mode
Mars Geological Observation	Manual	Command
Mars Meteorological Observation	Manual	Command
		Auto
Mars Dust storm Observation	Manual	Command
Phobos/Deimos Encounter	Manual	Auto
	Autonomous Tracking	Command
Dust ring search	Manual	Command
In-flight calibration	Manual	Command
Ground test	Manual	Oneshot

Table2.4.4-2 Validity of each command parameter

Software mode	Manual	Manual	Manual	Auto. track.
Hardware mode	Command	Auto	Oneshot	Command
MODE_SET parameters				
Color	○	○	○	○
Threshold	−	○	−	○
Ampgain	○	○	○	○
Elevation size	○	fixed to 512	fixed to 2560	fixed to 512
Azimuth size	○	fixed to 512	fixed to 8	fixed to 512
Azimuth start angle	○	−	−	−
Elevation start angle	○	−	−	−
ICM parameters	○	○	−	○
argument of TAKE	○ (1-64)	○ (1-64)	○ (only 1)	−

○ Valid − Invalid

2.4.4.3 Procedure for Manual mode imaging

In advance of imaging, some imaging parameters such as Color, Ampgain, Azimuth angle, Elevation angle, Image size and ICM parameters (i.e. image compression mode) must be sent to MIC. To send the parameters, following command is used for each image.

MIC_MODE_SET + 5 bytes parameters

It must be confirmed that "COMMAND MODE" is specified by the first byte of the parameters. Because MODE_SET commands are stored in command cue, parameters for maximum of 64 images can be sent to MIC in advance. The time to send the commands does not matter, while the order of the commands is important. Therefore, the commands can be sent as real-time commands from the ground station for future imaging plan, or can be set as OG which is temporally registered in advance.

Considering that the analog circuits of MIC is usually off to reduce power consumption, following commands are required for every successive imaging.

#1
MIC_CCD_ON
#2
MIC_DRV_STRT
NOP
. . . .
NOP
MIC_TAKE + 1 byte parameter
#3
MIC_DRV_STOP
MIC_CCD_OFF

To stabilize the circuits, OG #2 must be sent at least 1 sec after OG #1. OG #3 must be sent after all image was gotten, that is, when N is specified by the argument of TAKE command, it must be sent after (N+1) × (spin period of the spacecraft) sec. In OG #2, intervals between DRV_START and TAKE must be longer than 0.2 sec in order to sweep electrons out of CCD. Therefore some no-operation commands must be inserted in OG #2. OG #1, #2 and #3 are usually commanded by OP at the proper instance which is calculated on the ground considering the geometry between the spacecraft and the imaging target.

2.4.4.4 Procedure for Auto mode imaging

In advance of imaging, some imaging parameters such as Color, Threshold, Ampgain and ICM parameters (i.e. image compression mode) must be sent to MIC. To send the parameters, following command is used for each image.

MIC_MODE_SET + 5 bytes parameters

It must be confirmed that "AUTO MODE" is specified by the first byte of the parameters. In auto mode, the hardware searches a bright object automatically. So, there is no need to specify azimuth or elevation angle of imaging. On the other hand, Threshold level must be set properly. For the case that some bright objects is expected in the FOV, for example, both Phobos and Mars are in the FOV, searching area can be restricted by the following command.

MIC_SRCH_AREA_SET + 4 bytes parameters

Command cue function is same as COMMAND MODE. Following commands are required for every successive imaging. Conditions for the intervals between each commands are same as COMMAND_MODE.

#1
MIC_CCD_ON
#2
MIC_DRV_STRT
NOP
. . . .
NOP
MIC_TAKE + 1 byte parameter
#3
MIC_DRV_STOP
MIC_CCD_OFF

If the hardware can not find any bright object, MIC remains searching mode. To escape from searching mode,

MIC_STOP

command must be sent.

2.4.4.5 Procedure for Autonomous-tracking imaging

To start Autonomous-tracking imaging, first of all, the software must be transferred to Autonomous-tracking Mode by

MIC_SOFT_MODE + "FF"

Next, some imaging parameters such as Color, Threshold, Ampgain and some

parameters for image compression must be sent to MIC by the following command.

MIC_MODE_SET + 5 bytes parameters

It must be confirmed that "COMMAND MODE" is specified by the first byte of the parameters. Then, some tracking parameters which are calculated on the ground also must be sent by

MIC_TRK_PARAM + 22 byte parameters

When the software receives this command, it sets parameters of MODE_SET to the hardware.

To start tracking and imaging, following commands are required.

#1

MIC_CCD_ON

#2

MIC_DRV_STRT

NOP

. . . .

NOP

MIC_TRK_START

When MIC_SOFT_MODE + "00" is commanded, Autonomous-tracking Mode is terminated and the software stops tracking and imaging. Then, to reduce power consumption, following commands should be sent.

#3

MIC_DRV_STOP

MIC_CCD_OFF

2.4.4.6 Procedure for turn off

In the nominal operation, MIC is switched to stand-by state after imaging to reduce power consumption, that is, CPU is running and analog circuits are all off. To realize the stand-by state, following commands are required.

MIC_DRV_STOP

MIC_CCD_OFF

However, in the emergency such as Under Voltage Control of the spacecraft, "MIC_UVC" command substitutes those commands.

2.4.4.7 Thermal control

Requirements of thermal conditions of each part of MIC are summarized in Table2.4.4-3. The lens temperature can be controlled by the MIC hardware circuit. While the distributor for MIC is turned on, the lens temperature is always controlled above 0℃, that is, the heater is switched on when the temperature becomes under 0℃ and switched off when the temperature beyond 5℃. When MIC_HTR_ENA is commanded, the hardware controls lens temperature within operating range to ensure optical performance. That is, the heater is switched on at 24℃ and switched off at 26℃.

Since it takes about an hour to heat up the lens from 0℃ to 25℃, MIC_HTR_ENA command must be sent before enough the imaging.

Table2.4.4-3 Thermal condition of each part of MIC

	Telemetry Item	Operating temp.	Storage temp.
Lens	LENS-T	+22～+28 ℃	-25～ +50 ℃
Hood	-------	-80～+20	-80～ +20
CCD	CCD-T	0～+50	-25～ +50
Digital Circuits	FPGA-T	-25～+55	-40～+125
Analog Circuits	DRV-T	-25～+55	-40～+125
Interface with S/C	BASE-T	-25～+40	-40～ +50

2.4.5 Size, Weight, and Power Consumption

Size (W × D × H : mm) 92 × 150 × 235
excluding hood, connectors and cables

Weight 2.5 kg ± 0.1 kg
excluding hood and cables

Power consumption

DIST ON	7.0～ 9.0 W
CPU RUN	7.7～ 9.5 W
CCD ON	9.9～12.1 W
CCD drive start	13.7～16.7 W
CPU RESET	6.6～ 8.0 W
HTR ON	+2.3～+5.7 W

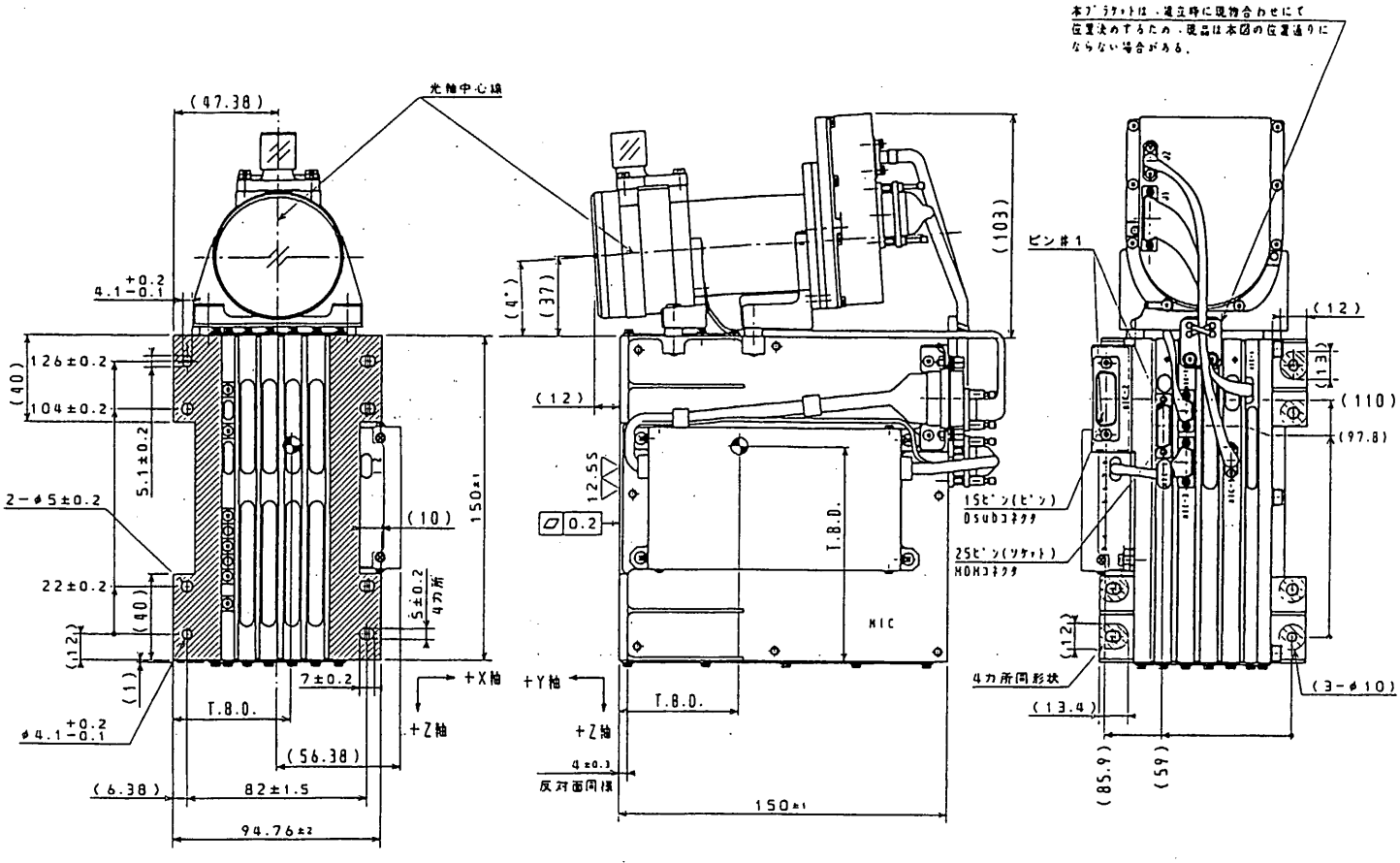

(a) optics and electronics

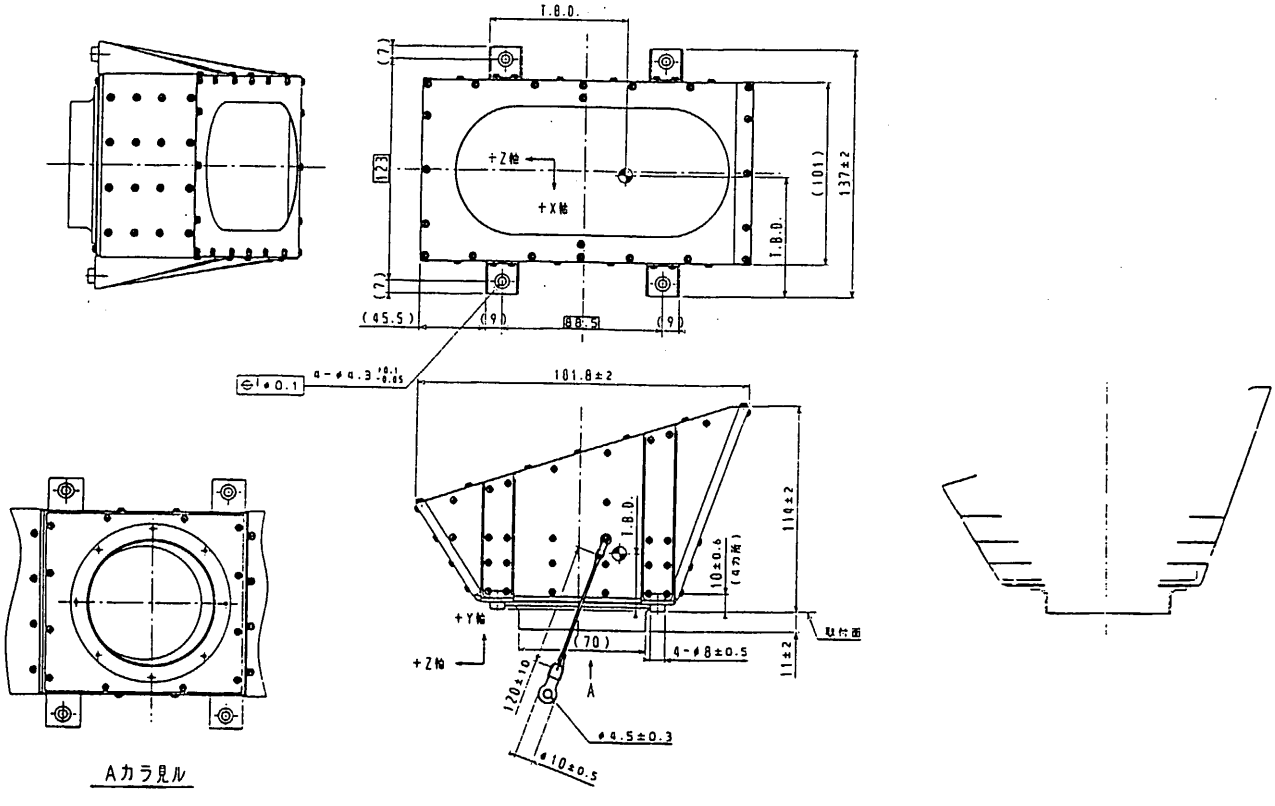

(b) hood

Fig.2.4.5-1 Outline of MIC

2.4.6 Command and Telemetry Items

2.4.6.1 Command Items

Discrete Commands to PIM

X	Y	COMMAND NAME	FUNCTION
0	1	CPU_ON	
0	4	MCRP_OUT	Refer to "DHU user's manual"
0	5	REQ_ACK	(PLANET-B-0409)
0	6	TI_CNT_SET	
0	7	TI_CNT_RESTART	
0	8	A-BUS_GUARD	
0	9	B-BUS GUARD	
0	A	AG_CANCEL	
0	B	BG_CANCEL	

Discrete Commands to SI-CPU

(SICPU ADDRESS : 4 F E 0 0 H)

X	Y	COMMAND NAME	FUNCTION
1	0	HTR_ENA	· With this command, the hardware controls lens temperature within the operating range (25 ± 3℃)
1	1	HTR_DIS	· With this command, the hardware controls lens temperature within survival range (≧ 0℃)
1	2	ECC_ENA	· Enable the ECC (Error Check Code) for the SRAM in SI-CPU. · Clear the ECC error flag.
1	3	ECC_DIS	· Disable the ECC for the SRAM in SI-CPU
1	4	WDT_ENA	· Enable the WDT (Watch Dog Timer) in SI-CPU · Clear the WDT error flag in SI-CPU.
1	5	WDT_DIS	· Disable the WDT in SICPU.
1	6	CPU_RUN	· Make the CPU run. · CPU becomes to be able to control DSP-PWB.
1	7	CPU_RST	· Generate NMI (Non Maskable Interrupt) to CPU. · 4 seconds later, "SI-OFF command" is sent to DSP-PWB and the CPU is made reset.
1	8	LD_ENA	· Enable the current limiter.
1	9	LD_DIS	· Disable the current limiter.
2	0	BUS_ACS_ENA	· Connect PIM-bus and CPU-bus.
2	1	BUS_ACS_DIS	· Disconnect PIM-bus and CPU-bus.

Discrete Commands to MIC hardware and software

(SICPU ADDRESS : 4 F E 0 0 H) → (MIC ADDRESS : 5 0 0 0 0 H)

X	Y	COMMAND NAME	FUNCTION
2	2	MODE_CHANGE	· Specify the new format and bit-rate of telemetry followed by BC commands.
3	1	CCD_ON	· Supply the power to CCD and analog circuits of MIC.
3	2	CCD_OFF	· Shut off the power of CCD and analog circuits of MIC.
3	3	RP_BACK	· Move the read pointer for image downlink to the previous image.
3	4	RP_FORW	· Move the read pointer for image downlink to the next image.
3	5	CP_BACK	· Move the pointer for image compression to the previous image.
3	6	CP_RESET	· Reset the compression pointer to the nominal position (=position of write pointer).
3	7	COMPRESS	· Compress the current image data.
3	8	STATUS_ERR_RST	· Reset the status error flags.
3	9	INIT	· Initialize the image-data control information
3	A	UVC	· Clear the command-buffer. · CCD_OFF · Switch ICM to power-down mode (*) CPU is still running.
4	1	MODE_SET	· Specify the parameter for imaging followed by BC commands.
4	2	TAKE	· Specify the number of image followed by BC commands and send "Imaging command" to MIC hardware.
4	3	STOP	· Stop searching for the target in the case of AUTO-MODE.
4	4	SRCH_AREA_SET	· Specify the search area of AUTO-MODE followed by BC commands.
4	5	CCD_DRV_START	· start driving the CCD circuits
4	6	CCD_DRV_STOP	· stop driving the CCD circuits
5	1	SOFT_MODE	· Change the mode of software followed by BC commands.
5	2	TRK_PARAM	· Specify the parameter of Autonomous Tracking Mode followed by BC commands.
5	3	TRK_START	· Start tracking the target in Autonomous Tracking Mode

Block Commands

BC set command MODE CHANGE (22H) Number of BC 3 bytes

(SICPU ADDRESS : 4 F E 0 1 H)

First byte	B 0	B 1	B 2	B 3	B 4	B 5	B 6	B 7
<Contents> Telemetry format	Not used (Set to 0)			Format No. ← ——— → MSB LSB 00H:No.00 1FH:No.31				

(SICPU ADDRESS : 4 F E 0 2 H)

Second byte	B 0	B 1	B 2	B 3	B 4	B 5	B 6	B 7
< Contents > Rate of telemetry gathering	Not used (Set to 0)				Bit-rate of telemetry edition ← ——— → MSB LSB 3H: 64bps DH: 65536bps			

(SICPU ADDRESS : 4 F E 0 3 H)

Third byte	B 0	B 1	B 2	B 3	B 4	B 5	B 6	B 7
< Contents > Rate of downlink telemetry	Bit-rate of X-band ← ——— → MSB LSB 8H: 2048bps CH: 32768bps				Bit-rate of S-band ← ——— → MSB LSB 3H: 64bps 7H: 1024bps			

BC set command MODE SET (41H)　　Number of BC 5 bytes

(SICPU ADDRESS : 4 F E 0 1 H)　→　(MIC ADDRESS : 5 0 0 0 1 H)

First byte	B 0	B 1	B 2	B 3	B 4	B 5	B 6	B 7
< Contents > Parameters for taking a picture	Color ← MSB LSB → 00: RED 01: GREEN 10: BLUE		Threshold ← MSB LSB → 00: LEVEL0 01: LEVEL1 10: LEVEL2 11: LEVEL3		AMP-gain ← MSB LSB → 00:GAIN0 01:GAIN1 10:GAIN2 11:GAIN3		Mode ← MSB LSB → 00:AUTO 01:COMMAND 10:ONESHOT	

	0	1
LEVEL0:	0- 31	32-255
LEVEL1:	0- 47	48-255
LEVEL2:	0- 79	80-255
LEVEL3:	0-143	144-255

(SICPU ADDRESS : 4 F E 0 2 H)　→　(MIC ADDRESS : 5 0 0 0 2 H)

Second byte	B 0	B 1	B 2	B 3	B 4	B 5	B 6	B 7
< Contents > Size of a picture	Elevation angle (pixel) ← → MSB 0001: 256 LSB 0010: 512 0100:1024 1111:2560				Azimuth angle (line) ← → MSB 0001: 256 LSB 0010: 512 0100:1024 1111: 8			

(SICPU ADDRESS : 4 F E 0 3 H)　→　(MIC ADDRESS : 5 0 0 0 3 H)

Third byte	B 0	B 1	B 2	B 3	B 4	B 5	B 6	B 7
< Contents > Azimuth angle to start taking a picture	Not used	Start angle (line) ← → MSB LSB 00H: 0 × 128+1 = 1st line 01H: 1 × 128+1 = 129th line 7FH: 127 × 128+1 = 16257th line						

(SICPU ADDRESS : 4 F E 0 4 H) → (MIC ADDRESS : 5 0 0 0 4 H)

Fourth byte	B 0	B 1	B 2	B 3	B 4	B 5	B 6	B 7
< Contents > Elevation angle to start taking a picture	Not used			Start pixel ← ——————————— → MSB LSB 00H: 0 × 128+1= 1st pixel 01H: 1 × 128+1= 129th pixel 12H: 18 × 128+1=2305th pixel				

(SICPU ADDRESS : 4 F E 0 5 H)

Fifth byte	B 0	B 1	B 2	B 3	B 4	B 5	B 6	B 7
< Contents > Parameters for the compression of images	Scale factor index (*1) ← ——————— → MSB LSB				(*2) ← —— → MSB LSB		NLS (*3)	MAL GO (*4)

*1: Scale factor index for image compression

Using these 4 bits, one of 16 kinds of scale factor indexes can be specified.

Actual values which correspond to each index are memorized in the parameter memory of ICM.

*2: Imaging mode concerning image compression

B4B5

0 0: Compress the image data and delete the raw data.

0 1: Compress the image data and don't delete the raw data.

1 0: Don't compress the image data.

*3: No Level Shift bit for JPEG algorithm.

Usually it is set to 0.

*4: Algorithmic mode select bit for Quantization

Using this bit, one set of quantization table out of 2 can be specified.

Quantization tables themselves are memorized in the parameter memory of ICM.

BC set command SRCH_AREA_SET (44H)　　Number of BC 4 bytes

(SICPU ADDRESS : 4 F E 0 1 H) → (MIC ADDRESS : 5 0 0 0 6 H)

Third byte	B 0	B 1	B 2	B 3	B 4	B 5	B 6	B 7
< Contents > Azimuth angle to start searching	Not used	Start angle (line) ← → MSB 00H: 0 × 128+1 = 1st line LSB 01H: 1 × 128+1 = 129th line 7FH: 127 × 128+1 = 16257th line						

(SICPU ADDRESS : 4 F E 0 2 H) → (MIC ADDRESS : 5 0 0 0 7 H)

Third byte	B 0	B 1	B 2	B 3	B 4	B 5	B 6	B 7
< Contents > Azimuth angle to stop searching	Not used	Start angle (line) ← → MSB 00H: 0 × 128+1 = 1st line LSB 01H: 1 × 128+1 = 129th line 7FH: 127 × 128+1 = 16257th line						

(SICPU ADDRESS : 4 F E 0 3 H) → (MIC ADDRESS : 5 0 0 0 8 H)

Fourth byte	B 0	B 1	B 2	B 3	B 4	B 5	B 6	B 7
< Contents > Elevation angle to start searching	Not used			Start pixel ← → MSB LSB 00H: 0 × 128+1= 1st pixel 12H: 18 × 128+1=2305th pixel				

(SICPU ADDRESS : 4 F E 0 4 H) → (MIC ADDRESS : 5 0 0 0 9 H)

Fourth byte	B 0	B 1	B 2	B 3	B 4	B 5	B 6	B 7
< Contents > Elevation angle to stop searching	Not used			Start pixel ← → MSB LSB 00H: 0 × 128+1= 1st pixel 12H: 18 × 128+1=2305th pixel				

BC set command SOFT_MODE (51H)　　Number of BC 1 byte

(SICPU ADDRESS : 4 F E 0 1 H)

First byte	B 0	B 1	B 2	B 3	B 4	B 5	B 6	B 7
< Contents > Mode of software	00H: Manual mode (default) FFH: Autonomous tracking mode							

BC set command TRK_PARAM (52H)　　Number of BC 22 bytes

byte order	SICPU ADDRESS	B 0	B 1	B 2	B 3	B 4	B 5	B 6	B 7
		(MSB)							(LSB)
1 2	4FE01H 4FE02H	(lower byte) Initial value of Spacecraft position angle (upper byte) -91.7 ~ 91.7 deg (LSB=2.8E-3 deg)							
3 4	4FE03H 4FE04H	(lower byte) Initial value of Azimuth angle (upper byte) 0.0 ~ 360.4 deg (LSB=5.5E-3 deg)							
5 6	4FE05H 4FE06H	(lower byte) Angle between Earth direction and relative velocity (upper byte) 0.0 ~ 360.4 deg (LSB=5.5E-3 deg)							
7 8	4FE07H 4FE08H	(lower byte) Initial value of B-plane phase angle (upper byte) 0.0 ~ 360.4 deg (LSB=5.5E-3 deg)							
9 1 0	4FE09H 4FE0AH	(lower byte) Initial value of X-parameter (upper byte) 0.0 ~ 0.98 /sec (LSB=1.5E-5 /sec)							
1 1 1 2	4FE0BH 4FE0CH	(lower byte) Relative velocity (upper byte) 0.0 ~ 49.8 km/sec (LSB=7.6E-4 km/s)							
1 3 1 4	4FE0DH 4FE0EH	(lower byte) X-component of sun direction vector (upper byte) -1.0 ~ 1.0 (LSB=3.1E-5)							
1 5 1 6	4FE0FH 4FE10H	(lower byte) Y-component of sun direction vector (upper byte) -1.0 ~ 1.0 (LSB=3.1E-5)							
1 7 1 8	4FE11H 4FE12H	(lower byte) Z-component of sun direction vector (upper byte) -1.0 ~ 1.0 (LSB=3.1E-5)							
1 9 2 0	4FE13H 4FE14H	(lower byte) Mean radius of the target body (upper byte) 0 ~ 1769 km (LSB=2.7E-2 km)							
2 1 2 2	4FE15H 4FE16H	(lower byte) Estimation interval of the filter (upper byte) 0 ~ 2556 sec (LSB=3.9E-2 sec)							

2.4.6.2 Telemetry Items

Status of MIC and analog HK items are output in HK packet. Image data including imaging parameters is output in MIC packet which can be output only when telemetry mode is "MIC MODE". If there is no image which is not yet downliked in MIC_MODE, MIC status packet is output.

Bilevel status data of MIC

(PIM ADDRESS: 8000H) MSB=B0 LSB=B7

WORD	NAME (address)	Bit	ITEMS	STATUS	
				1	0
113	MIC1 (0A, 8000)	B7	CPU ON/OFF	ON	OFF
		B6	CPU RUN/RESET	RUN	RESET
		B5	WDT ENA/DIS	ENA	DIS
		B4	WDT ERR	ERROR	NO ERROR
		B3	HTR CNT ENA/DIS	ENA	DIS
		B2	ECC ENA/DIS	ENA	DIS
		B1	ECC 1BIT ERR	ERROR	NO ERROR
		B0	ECC 2BIT ERR	ERROR	NO ERROR

(SICPU ADDRESS: 4F800H) MSB=B0 LSB=B7

WORD	NAME (address)	Bit	ITEMS	STATUS	
				1	0
114	MIC2 (0A, F800)	B7	CCD PWR ON/OFF	ON	OFF
		B6	Software Mode	Auto. Tracking	Manual
		B5	Command ERR	ERROR	NO ERROR
		B4	Overwrite ERR	ERROR	NO ERROR
		B3	Compress ERR	ERROR	NO ERROR
		B2	Read Pointer ERR	ERROR	NO ERROR
		B1	CCD Drive ON/OFF	ON	OFF
		B0	Memory Empty Flag	EMPTY	DATA EXIST

(SICPU ADDRESS: 4F801H) ← (MIC ADDRESS: 50001H) MSB=B0 LSB=B7

WORD	NAME (address)	Bit	ITEMS	STATUS	
				1	0
115	MIC3 (0A, F801)	B7 B6	Hardware Mode	B6B7 0 0 : AUTO MODE 0 1 : COMMAND MODE 1 0 : ONESHOT MODE 1 1 : ERROR	
		B5 B4	Amp gain	B4B5 0 0 : GAIN0 0 1 : GAIN1 1 0 : GAIN2 1 1 : GAIN3	
		B3 B2	Threshold	B2B3 0 0 : Level0 0 1 : Level1 1 0 : Level2 1 1 : Level3	
		B1 B0	Color	B0B1 0 0 : RED 0 1 : GREEN 1 0 : BLUE 1 1 : ERROR	

(SICPU ADDRESS: 4F802H)

WORD	NAME (address)	Bit	ITEMS	STATUS	
				1	0
116	MIC4 (0A, F802)	B7 B6 B5 B4 B3 B2 B1 B0	Memory Write Pointer	Upper 8bits of the address	

(SICPU ADDRESS: 4F803H)

WORD	NAME (address)	Bit	ITEMS	STATUS	
				1	0
117	MIC5 (0A, F803)	B7 B6 B5 B4 B3 B2 B1 B0	Memory Read Pointer for image downlink	Upper 8bits of the address	

(SICPU ADDRESS: 4F804H)

WORD	NAME (address)	Bit	ITEMS	STATUS	
				1	0
118	MIC6 (0A, F804)	B7 B6 B5 B4 B3 B2 B1 B0	Memory Read/Write Pointer for image compression	Upper 8bits of the address	

Analog HK items of MIC

WORD	NAME (Address)	ITEM	UNIT	RANGE	CONVERSION SYSTEM
389	MIC-A-1 (0A, 8010)	DSP+5V	V	0 ~ +10.24	LSB = +0.04 V
390	MIC-A-2 (0A, 8011)	DSP+15V	V	0 ~ +24.32	LSB = +0.095 V
391	MIC-A-3 (0A, 8012)	DSP-15V	V	0 ~ -24.32	LSB = -0.095 V
392	MIC-A-4 (0A, 8013)	ASP+5V	V	0 ~ +10.24	LSB = +0.04 V
393	MIC-A-5 (0A, 8014)	ASP+15V	V	0 ~ +32.00	LSB = +0.125 V
394	MIC-A-6 (0A, 8015)	ASP-15V	V	0 ~ -32.00	LSB = -0.125 V
395	MIC-A-7 (0A, 8016)	LENS-T	℃	-44.9 ~ 48.1	(*1)
396	MIC-A-8 (0A, 8017)	CCD-T	℃	-44.9 ~ 48.1	(*1)
397	MIC-A-9 (0A, 8018)	DRV-T	℃	-44.9 ~ 48.1	(*1)
398	MIC-A-10 (0A, 8019)	BASE-T	℃	-44.9 ~ 48.1	(*1)
399	MIC-A-11 (0A, 801A)	FPGA-T	℃	-44.9 ~ 48.1	(*1)

(*1) $T = 0.00026535 \times X^2 + 0.2973 \times X - 44.9505$

Telemetry format of MIC packet

Transfer Frame (512 bytes)

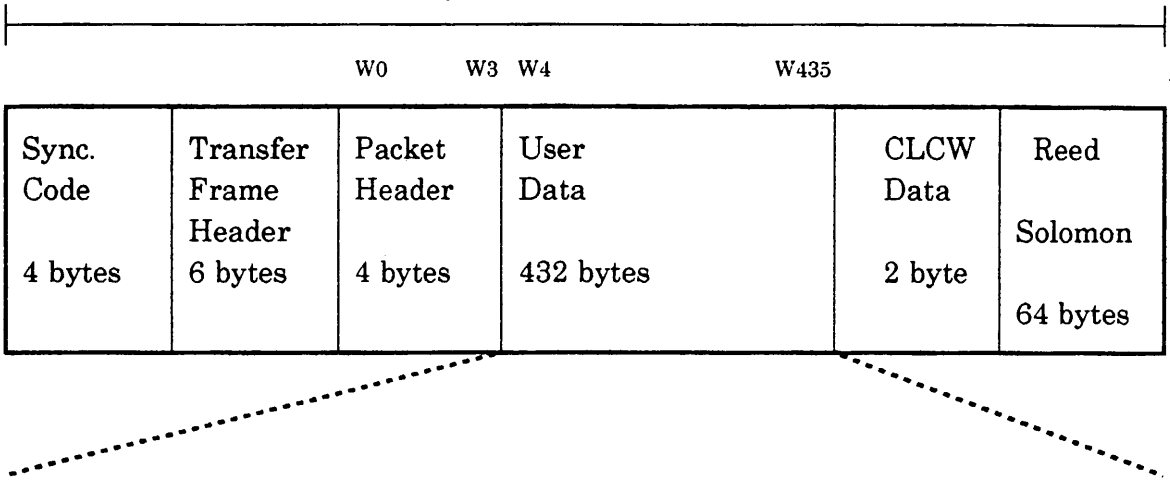

・Format for uncompressed (raw) image data

1st packet

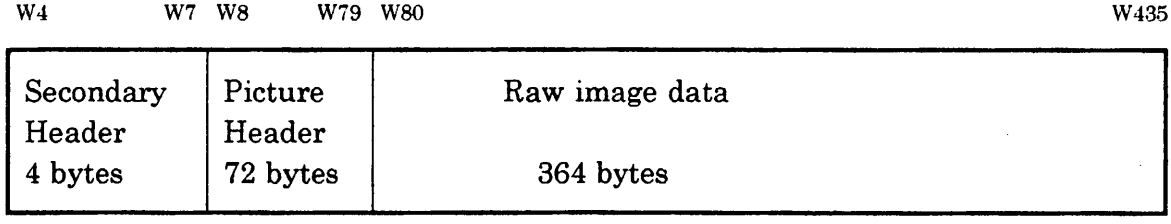

2nd ～ [last-1] packet

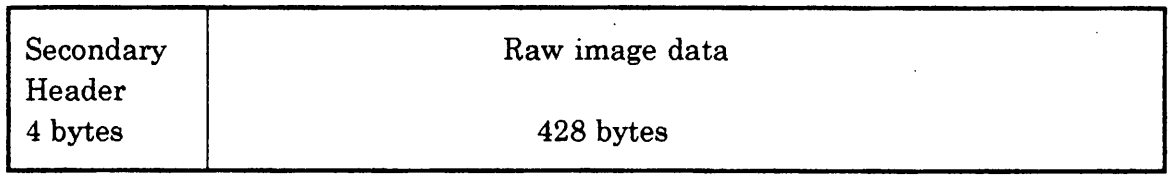

last packet

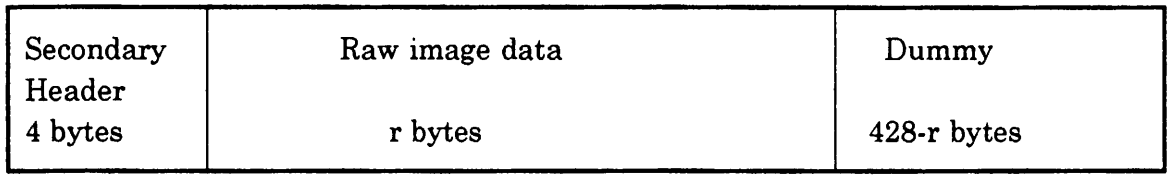

• Format for compressed image data

Raw image data area is substituted by ICM bitstream mentioned below.
In ICM, an image is divided to sub-images by 16 lines. For example, a 512 lines × 512 pixels image is recognized as 32 of 16 lines × 512 pixels sub-images in ICM and 32 ICM Picture Header exist in the image.

ICM bitstream

ICM Picture Header	GOB 0 Header	GOB 0	GOB 1 Header	.....	GOB N
56 bits	29 bits	variable length	29 bits		variable length

N = (pixel size of an image) / 64
GOB : Group of Block
1 GOB = 16 Blocks
1 Block = compressed data for a 8 × 8 image.

ICM Picture Header

Picture Sync (FF FF FF FF)	Picture Number	Mode Register B7～B4:Scale factor B1:NLS B0:MALGO	GOB Size (*1)
32 bits	8 bits	8 bits	8 bits

(*1) In case of MIC, it is set to 16, that is, 10H.

GOB Header

GOB Sync (55 55 FF)	B4:TB B3～B0: GOB Number
24 bits	5 bits

GOB

δ DC CLASS	δ DC COEFF	AC1 CLASS	AC1 COEFF	AC2 CLASS	AC2 COEFF	.....	EOB

• Format for Status Packet

If image data memory is empty while MIC_MODE, that is, all of images are already downliked, MIC outputs Status Packets.

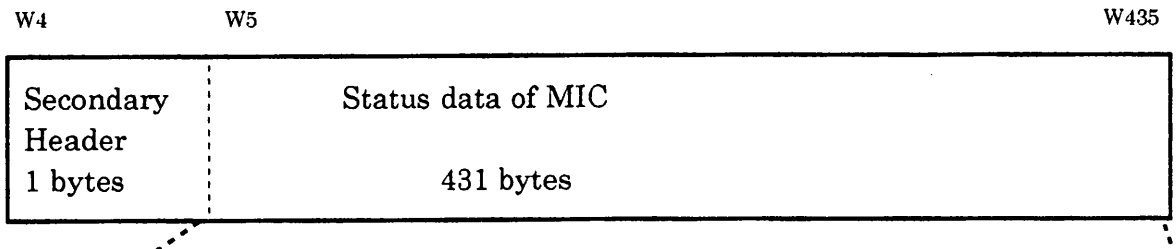

WORD	ITEMS	Remark
5	SI-CPU Status	I/O 1BH
6	Last DC command	MEM 50000H
7-10	MODE_SET BC register	MEM 50001-50004H
11	Operation Mode register (*1)	MEM 50005H
12-15	SRCH_AREA_SET BC register	MEM 50006-50009H
16- 18	SRAM address counter	MEM 5000A-5000CH
19	Address converter register	I/O 18-1AH
20-21	ICM control register	MEM 5000E-5000FH
22-31	COFO_CMD register	MEM 50010-50019H
32-37	Not used	
38-43	DMAC control register	MEM 50020-5002FH
44-69	Not used	
70	Number of MODE_SET parameters in cue	
71-73	TLM format & bitrate	
74	SOFT_MODE	BC COMMAND
75-96	TRK_PARAM	BC COMMAND
97-102	Error status	
103-435	Dummy data	

(*1) B0-B7 corresponds to the state of Taking, Searching, Waiting-IP, Error, Oneshot-mode, Command-mode, Auto-mode, CCD-ON, respectively.

-- Secondary Header (4 bytes) --

WORD	bit	ITEMS
4	B7=LSB B6	B6B7=00:No data or Status Packets 01:The first packet of image data 10:Interim packet of image data 11:The last packet of image data
	B5	Fixed to 0
	B4	Fixed to 0
	B3 B2	B2B3=10:Image Data Packet
	B1	System reserved
	B0=MSB	1:Used for Satellite Control 0:Not-used for Satellite Control
5	B0-B7	Image number
6	B0-B7	(Lower) Packet number of the image
7	B0-B7	(Upper)

In case of "status packet", only first byte exists.

-- Picture Header (72 bytes) --

WORD	ITEMS	Remark
8-9	Lower 16bits of image size	
10	B3-B7=LSB Upper 4bits of image size B1-B2 Not used B0=MSB 1:Compressed 0:Raw	
11-13	Time of Imaging (TI counter)	I/O 18-1AH
14-17	MODE_SET BC register	MEM 50001-50004H
18	Operation Mode register (*1)	MEM 50005H
19-22	SRCH_AREA_SET BC register	MEM 50006-50009H
23-24	ICM control register	MEM 5000E-5000FH
25-34	COFO_CMD register	MEM 50010-50019H
35-36	Lower 9bits of Start Angle	MEM 5001A
37	SOFT_MODE	BC COMMAND
38-59	TRK_PARAM	BC COMMAND
60-67	Tracking information	
68	SI-CPU Status	I/O 1BH
69-79	HK Analog Data	I/O 20-2BH

(*1) B0-B7 corresponds to the state of Taking, Searching, Waiting-IP, Error, Oneshot-mode, Command-mode, Auto-mode, CCD-ON, respectively.

2.5 Thermal Plasma Analyzer (TPA)

TPA Team

A. W. Yau	University of Calgary and NRC Canada	yau@space.phys.ucalgary.ca
T. Abe	Aoyama Gakuin University	abe@gauss.ee.aoyama.ac.jp
T. Creutzberg	National Research Council Canada (NRC)	creutzberg@dan.sp-agency.ca
G. S. Campbell	Canadian Space Agency (CSA)	glen.campbell@space.gc.ca
E. Donovan	University of Calgary	donovan@space.phys.ucalgary.ca
G. P. Garbe	University of Calgary	garbe@space.phys.ucalgary.ca
R. E. Horita	University of Victoria	horita@uvphys.phys.uvic.ca
I. Iwamoto	Communications Research Lab (CRL)	iwamoto@crl.go.jp
R. Kissack	University of Western Ontario	kissack@danlon.physics.uwo.ca
D. J. Knudsen	University of Calgary	knudsen@space.phys.ucalgary.ca
K. Marubashi	Communications Research Lab (CRL)	kmaru@crl.go.jp
W. Miyake	Communications Research Lab (CRL)	miyake@crl.go.jp
K. I. Oyama	Institute of Space and Astronautical Science (ISAS)	oyama@bochan.isas.ac.jp
E. Sagawa	Communications Research Lab (CRL)	esagawa@crl.go.jp
J. P. St Maurice	University of Western Ontario	stmaurice@danlon.physics.uwo.ca
J. C. Samson	University of Alberta	samson@space.ualberta.ca
R. Shelly	Canadian Space Agency (CSA)	randy.shelly@space.gc.ca
H. Shinagawa	Nagoya University	sinagawa@stelab.nagoya-u.ac.jp
S. Watanabe	Tohoku University	shw@stpp2.geophys.tohoku.ac.jp

2.5.1 Observation Objectives

The observation objective of the Planet-B Thermal Plasma Analyzer (TPA) instrument is to make direct measurements of the thermal plasma density, composition, velocity, and temperature distributions in the Martian ionosphere, and the suprathermal plasma distributions in the Martian magnetosphere and the solar wind in its vicinity.

The lowest energy component of the Martian magnetospheric plasma is believed to play a significant role in the interactions between the Martian neutral atmosphere, ionosphere, magnetosphere, and the solar wind. The dynamics and composition of the Martian ionosphere are subjects of considerable interest, as is the question of the existence of intrinsic magnetic moment on the Martian planet, due to the scarcity of definitive in-situ observations. The Planet-B orbit has a periapsis of 150 km. It will provide TPA with an excellent opportunity to observe the dynamics and composition of the Martian ionosphere, and to address the question of intrinsic magnetic field.

The scientific objectives of TPA observations are as follows:

- To determine the drift velocity distributions of different thermal ion species;
- To determine the thermal plasma density and temperature distribution in the Martian ionosphere, both on the dayside and on the nightside;
- To study the occurrence, energization, and transport of suprathermal ions and electrons in ion pick-up and other processes;
- To study electron loss cone distributions for possible signatures of magnetic field anomaly;
- To study the microstructure of solar wind electrons; and
- To study the plasma torus in Phobos and Deimos orbits if the opportunity arises.

Ionospheric plasma transport from the dayside to the nightside is dependent on the magnitude of the intrinsic Martian magnetic field and the interplanetary magnetic field. Bulk plasma drifts, and possibly

energetic particle precipitation, are believed to be responsible for the maintenance of the nightside ionosphere. However, these processes may be insufficient to maintain the nightside plasma density at significant (detectable) levels at times.

The cold ionospheric plasma tends to anchor magnetic field lines to the neutrals in the atmosphere through collisions. In the presence of convection electric fields, this produces magnetospheric current systems. These currents may in turn generate plasma instabilities and cold plasma heating, which tend to release the convection induced magnetic stress and accelerate the cold ions. The heating processes are expected to operate in the high altitude Martian ionosphere, and to lead to significant plasma outflow away from the ionosphere and eventually loss to interplanetary space.

The solar wind interaction with the Martian magnetosphere is very different from that with the terrestrial magnetosphere. Because of the weak planetary magnetic field and low dynamic pressure, the bow shock is located close to the planet (at a distance of only about one Martian radius upstream of the planet at the sub-solar point. Also, the dimension of the magnetosheath is of the order of a solar wind ion gyro-radius, about 10^3km. Therefore, the shocked solar wind plasma interacts directly with the ionospheric and exospheric particles. Ion "pick up" occurs as the neutrals are picked up in the plasmasheath flow when they become photo-ionized or charge-exchange with the solar wind plasma, in a fashion similar to that near cometary nuclei, resulting in the production of energetic (keV) ion fluxes in the Martian magnetotail.

If Mars has a small intrinsic magnetic moment, reconnection with the solar wind magnetic field lines may occur, possibly leading to Martian substorms and other auroral-like phenomena. The recurrence time scales for such processes will be significantly shorter than on earth, however. The high conductance of the Martian ionosphere will short-out any convection electric field in the ionosphere, leading to highly stressed magnetic field configurations above the ionosphere and in the Martian magnetotail, and to the de-coupling of magnetospheric convection from the ionosphere. This may lead to large energy dissipation in the ionosphere and outflow of energetic plasma to the magnetotail. Moreover, if significant magnetic field anomaly exists, the angular distribution of escaping photoelectrons or mirroring electrons may exhibit significant small-scale variations across the topside ionosphere.

The Planet-B spacecraft will spend a substantial fraction of time in the solar wind, where typical temperatures are tens of eV for electrons and hundreds of eV for ions. TPA observations in this region will provide a unique, high-resolution, data set to study the microstructure of the solar wind plasma and the energy and momentum flow in the solar wind.

The Planet-B orbit is also expected to intersect the orbits of the Martian moons, Phobos and Deimos. A "plasma torus" (enhancement in local plasma density and temperature) is believed to exist along the Phobos and Deimos orbits. It presumably originates from outgassing neutrals from the moons that interact with the solar wind.

2.5.2 Instrument Configuration

The TPA instrument consists of a sensor head (designated as TPA-S-A), a boom (TPA-S-B), a cradle and strap (TPA-S-C), and an electronics module (TPA-E). Figure 2.5.2-1 depicts the TPA sensor head and boom in the stowed configuration. The electronics module provides the interface to the spacecraft power, command, telemetry, and attitude/orbit control electronics (AOCE), and controls the operation of the sensor. It is mounted on the inside of spacecraft side panel E. The cradle is mounted on the

outside of the sidepanel. The boom has two segments. It is stowed at launch. The sensor is inside a cylindrical enclosure, and has 4 entrance aperture slits around the mid-length of the enclosure. It is mounted on the end of the outer boom segment, and is strapped to the cradle at launch. Once in Mars orbit, the cradle releases the sensor from the strap using a paraffin actuator on ground command, and the boom will be deployed to place the entrance apertures of the sensor at 1 meter from the spacecraft sidepanel.

The TPA sensor uses a hemispherical electrostatic analyzer (HEA) to image the energy-per-charge distribution of an incident particle population and its azimuthal distribution in the entrance aperture plane. In addition, it uses a pair of time-of-flight (TOF) electrodes to gate the arrival times (and therefore mass-per-charge) of individual particles. Figure 2.5.2-2 is a schematic cross section of the sensor through the rotationally symmetric boom mounting axis. It identifies the electrostatic voltages

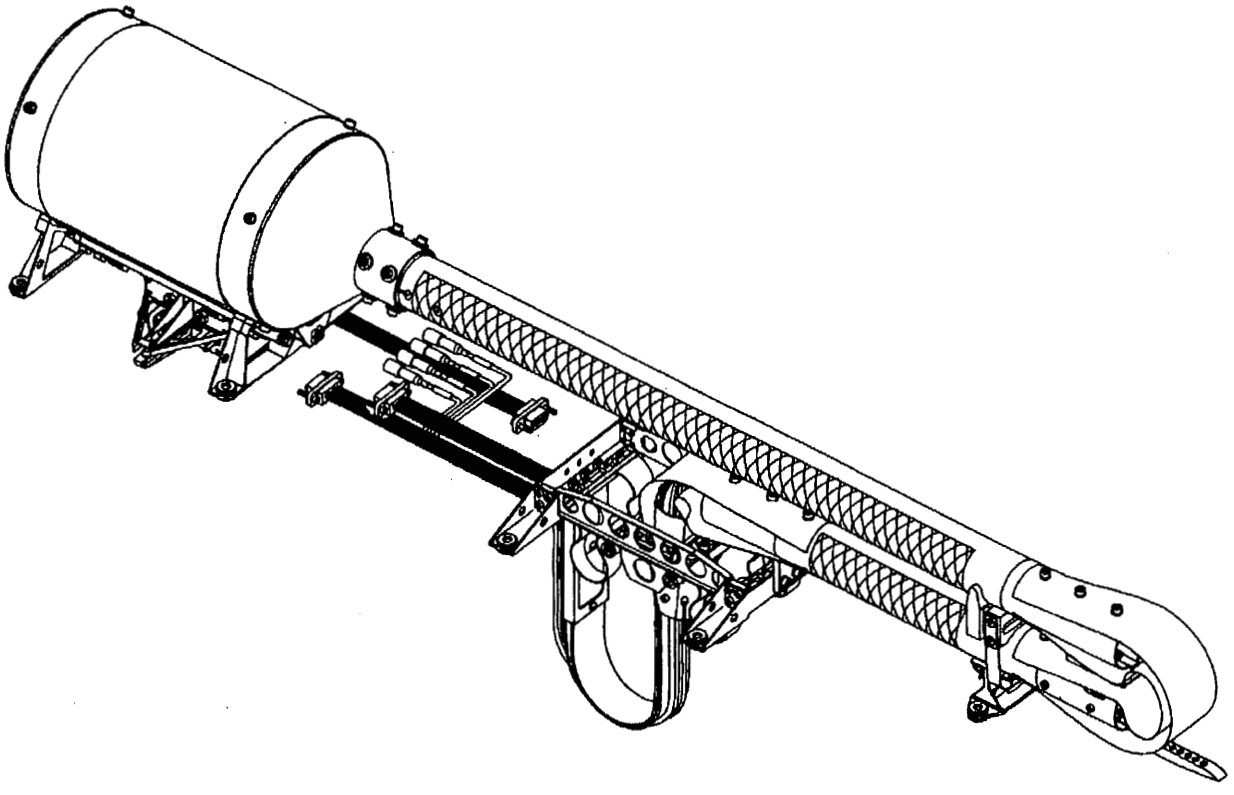

Figure 2.1-1 TPA sensor head (TPA-S-A) and boom (TPA-S-B) in stowed configuration.

inside the sensor: VEA at the entrance aperture, VTF at the time-of-flight electrodes, VES and VSA at the outer and inner hemispheres of the HEA, respectively, VGD at the guard grid between the HEA and the microchannel plate (MCP), VCP at the front of the MCP, and VAN at the anode.

The ion optics of the TPA sensor is identical for both ions and electrons, and is defined principally by the hemispherical electrostatic analyzer (HEA) and the pair of time-of-flight electrodes. Both the inner

and outer hemispheres of the HEA consist of a titanium foil upper section which is made by laser etching and welded to an aluminum lower section. Each has a transmission efficiency of 0.5. The sensor enclosure can be biased either positive or negative with respect to the spacecraft, for the purpose of partially compensating for the spacecraft potential. Inside the entrance aperture slits, the pair of switching TOF electrodes act as an electrostatic deflection gate. The HEA disperses incoming particles by their energy per charge and azimuth (in the entrance aperture plane). It focusses incident particles of different elevation angles and entrance positions but the same azimuth and energy per charge onto a single point on its hemispherical plane (short dashed line in Figure 2.5.2-2). The radial distance of this point from the center of the plane increases with the particle energy-per-charge. The energy range of the measured particles is defined by the voltages VEA, VES, VSA, and VGD. The maximum incident ion energy-per-charge to inner hemispheric grid voltage ratio is defined by the relationship $(E_{max}/q - VES) / (VSA - VES) \sim 0.2$. Table 2.5.2-1 lists the ranges of sensor voltage.

In ion measurements, the inner hemisphere of the HEA is biased negative relative to the outer hemisphere, and the pulse timing and duration of the TOF electrodes pre-select the mass range of particles entering the HEA. VGD is biased to 500-1000 V negative relative to VSA, to retain the energy and angular focusing of the particles on the MCP. In electron measurements, the inner hemisphere of the HEA is biased positive relative to its outer hemisphere, and the TOF voltages is pulsed to control the duty cycle of measurement, to increase the dynamic range of measured electron flux; VGD is biased negative relative to VCP to suppress the entry of low-energy background electrons to the MCP. Figure 2.5.2-3 depicts the time-of-flight (TOF) gate open and close sequence in a measurement. Table 2.5.2-2 lists the time-of-flight gate timing parameters. The TOF gate open period typically ranges from 0.1 to 1.0 μs. A measurement consists of 1 to 65535 TOF periods; a TOF period (gate open and close cycle) can range from 0.4 to 25.6 μs.

Particles passing through the analyzer and arriving at the surface of the microchannel plate (MCP) produce charges at the MCP surface which are then proximity focussed and collected onto the anode at the back of the MCP. The microchannel plate (MCP) has an annular active area of 0.54 cm and 2.50 cm inner and outer radius, respectively. The front side of the anode contains 4 pixels in the spin axis and 6 pixels in the spin plane. The pixels are located at a radial distance of 10.5 to 21.5 mm from the anode center, and vary in radial width from 1.1 to 2.1 mm and in angular extent from 60° to 17°. By proper selection of VSA, it is possible to direct incident particles of a given energy to any one of the pixels in the direction of the spin plane or the spin axis. In both directions, the large angular width of the innermost pixels provides maximum angular coverage of the incident particle distribution while the small angular width of the outermost pixels maximizes the angular resolution in the measured data. On the backside of the anode, each pixel is connected to a charge amplifier, which detects the charge buildup ("particle hit") at the pixel above a threshold value (2.9×10^5 electrons). The pre-amplifier circuitry determines the pixel location (ring and column) of a detected charge pulse and its arrival time relative to the TOF gate opening; the latter is encoded into an 8-bit time-of-flight bin address. As noted earlier, the pixel location defines the energy-per-charge and the azimuth of the incident particle perpendicular to the spacecraft spin plane, respectively. The measured time-of-flight and the energy-per-charge combine to define the mass-per-charge of the particle. The charge amplifier circuitry has a deadtime of 0.5 μs between particle detection, i.e., a maximum particle detection throughput of 2×10^6 resolved particle hits per second.

The electronics module (TPA-E) consists of a controller, a low voltage power supply (LVPS), and a high voltage power supply (HVPS). It is enclosed in a aluminum container consisting of two clamshells and a thermal gasket. The controller consists of a Harris RTX-2010-RH processor running at an instruction speed of 2.5 mips, a 4-KB boot PROM (2K 16-bit words) and two banks of

non-volatile EEPROM memory (128-KB, in two 64-KB pages each). It has a 16-bit data bus (64K 16-bit words in each EEPROM memory), and 2 MB of read/write random access memory (SRAM), including 256 kB of EDAC-protected memory.

Table 2.5.2-1 TPA Sensor Electrode Voltages

Name	Voltage	Reference	Voltage range (V)
VEA	entrance aperture	S/C ground	± 0 - 50
VES	entrance slit	S/C ground	± 0 - 100
VTF	TOF gate	VES	0 - 25
VSA	spherical analyzer	S/C ground	± 0 - 1000
VGD	ground grid	S/C ground	± 0 - 1500
VCP	front of MCP	S/C ground	± 0 - 1500
VAN	anode	VCP	0 - 2500

Table 2.5.2-2 Time of Flight Gate Timing Parameters

tbin = TOF bin period	0.1 μs
topn = TOF gate open period	1 - 255 tbin
ttfp = number of TOF bin periods per TOF period	1 - 255 tbin
tstart = start time of gating of detected particles	1 - 255 tbin
tstop = stop time of gating of detected particles	1 - 255 tbin
nobs = number of TOF periods in a measurement	1 - 65535

The controller communicates with the spacecraft command and telemetry via a Peripheral Interface Module (PIM), and accepts both discrete commands (DC) and block commands (BC) from the PIM, including a number of hardware-decoded commands; see Table 2.5.6-1 below. In addition, it uses the Index Pulse (IP) and Phase Clock (PC) signals from the spacecraft attitude orbit control electronics (AOCE) to latch and read time and spin phase angle data from the PIM, and the Guard Pulse (GP) signal from the AOCE to determine the status of operation of the Plasma Wave Sounder (PWS) onboard. The PIM interface has 4 status and 4 analog registers; see Table 2.5.6-5 and -6 below. The processor can be reset by a primary or secondary CPU-RESET signal from the PIM.

The low voltage power supply (LVPS) converts the spacecraft bus power (+28Vdc) into regulated and isolated +5Vdc and +12Vdc outputs. It uses a number of power relays to control the connection of the spacecraft bus power to the high voltage power converter, the paraffin actuator heaters, and the regulated +5Vdc to the sensor head and the controller. The LVPS also converts the temperatures of the sensor head, cradle, and electronic module, and the resistance of the boom and cradle, into analog

voltages. The 4 analog channels are multiplexed and digitized, and sampled at 9.765 kHz each. The HVPS provides the sensor voltages in Table 2.5.2-1, and the ground reference for all the medium and high voltage signals.

The TPA boom (TPA-S-B) has 2 hollow, cylindrical segments made of carbon fibre reinforced plastic (CFRP) and joined by two semi-cylindrical, heat-treated, and rhodium-plated berrylium copper (BeCu) hinges. The exterior of the two boom segments is coated with rhodium, and electrically isolated from each other. It is covered in part by a black kapton film. The carbon outer layer of the kapton film is in electrical contact with the rhodium, to ensure good electric contact with the ambient plasma. The inboard segment is electrically connected to the satellite body, at the single point ground inside the electronics module. The outboard segment is electrically connected to the sensor head.

At launch, the boom is in its stowed state. The two boom segments are folded together and the sensor head is secured to the cradle using a strap, which provides a dust cover for the sensor head. At deployment, the strap is released with a paraffin actuator. The inboard boom segment then moves away from the cradle by virtue of the centrifugal force of the spacecraft spin. The two segments unfold from each other when the release angle between the inboard segment and the cradle reaches 13°; this angle is controlled by a latch. The BeCu hinges snap the two segments in place as they become fully unfolded. The boom assembly contains an aluminum softwell which dampens the force on the sensor head during the deployment. In the deployed state, the axis of rotational symmetry of the sensor head is oriented along the spacecraft spin plane, so that its entrance aperture plane is oriented parallel to the spin axis, and at 1 meter from the spacecraft side panel. The entrance aperture plane is azimuthally oriented so that two of the aperture slits are centered on the spacecraft spin axis and the other two perpendicular to it.

2.5.3 Instrument Specifications

The specifications of the TPA boom and cradle are as follows:

TPA-S-B (Boom)

Components:	two boom tubes (an inboard and an outboard boom segment); two hinges (a shoulder joint and an elbow joint), a softwell (mounting base) assembly, a boom latch (for securing stowed boom to spacecraft sidepanel).
Mount location:	center on spacecraft side panel E
Release angle:	angle of inboard boom segment release = 13°
Thermal Mass:	325 J/C
Boom tube:	Composition: carbon fiber reinforced plastic composite (0.51-mm thick inner layers of T-50 graphite fibers in matrix of anhydride cured epoxy; 0.12-mm thick insulation layer of glass fibers and epoxy). Surface: conductive carbon layer on kapton film Diameter: 28.0 mm Flexural strength: 690 MPa Stiffness: 550 N-m^2 Solar absorptivity:0.92 Thermal emissivity: 0.88 Thermal expansion: -0.6×10^{-6} K^{-1} Natural frequency: 4.3 Hz (deployed boom)
Boom cables:	4 coaxial high voltage cables (4 KV, derated; 1.4 m); 1 flexprint, strip-format

	medium voltage cable (5 conductors, up to 200 Vdc on one layer, HV_RTN on the other; 1.5 m); 1 flexprint logic cable (10 logic lines + 2 low voltage power lines + 4 diagnostics lines + 2 power return lines + 2 shields; multi-layer, shielded, grounds on one layer; 1.5 m)
Hinges:	Shoulder and Elbow Diameter: 28.0 mm Gap width: 41° Buckling moment: 26.7 N-m^2 and 16.0 N-m^2 Maximum deployment moment: 5.3 N-m^2 and 3.3 N-m^2 Stiffness: 499 N m rad^{-1}
Softwell:	Material: Aluminum Stiffness: 38 N-m/rad

TPA-S-C (Cradle and strap)

Components:	cylinder segment supported on end plates; lined with delrin and silicone elastomer gasket inside; release mechanism based on a paraffin actuator with redundant heaters; BeCu attached to cradle and release mechanism.
Cradle:	Material: aluminum/titanium Thermal emissivity: 0.33 (after boom deployment) Solar absorptivity: 0.42 (after boom deployment) Thermal mass: 150 J/C Exposed surface: 128 mm × 80 mm
Strap:	Material: 0.08-mm thick pre-formed and pre-heated beryllium copper in 25-mm diameter roll Surface coating: white paint Thermal emissivity: 0.15 (after boom deployment) Reflectivity: 0.36 (after boom deployment) Exposed surface: 112 mm × 30 mm diameter Strap tension: 65 kgf
Paraffin actuator:	Minimum operation temperature: -50°C at 27 V (-3°C at 16 V) supply voltage Heater power: 10 W at 27 Vdc; Heater circuitry: primary and redundant heaters on independent circuits Actuation temperature (paraffin melting temperature): 82°C Force on sensor at release: 2.6 N (0.5 N centripetal; 2.1 N from elbow hinge) Piston travel: 19 mm

2.5.4 Size, Mass, Power Consumption

Mass	TPA-S-A	1012 gm (incl. adapter cone)
	TPA-S-B	502 gm (incl. cables)
	TPA-S-C	516 gm
	TPA-E	1244 gm
	Total	3274 gm
C.G.*	TPA-S-B, stowed	(46 mm, -26 mm, 0 mm)
	TPA-S-C, stowed	(-303 mm, -12 mm, 7mm)
	TPA-S-B, deployed	(5 mm, -250 mm, 0 mm)

TPA-S-C, deployed (-303 mm, -6 mm, 2 mm)
*(x, y, z); origin is sidepanel outer surface and centerline of deployed boom

Size TPA-S-A 125 mm L × 105 mm dia. (+ 53 mm high, 105 mm base dia. adapter cone)
TPA-S-B 90 cm L (deployed length from s/c sidepanel to adapter cone) × 28.0 mm dia.
TPA-S-C 129 mm L × 115 mm W × 125 mm H (225 mm with sensor installed)
TPA-E 211 mm L × 128 mm W × 64 mm H

Power				
	Sleep State	2.3 W	Boot	4.7 W
	Sleep Boom Deploy	11.8 W	Idle	5.3 W
	Active Boom Deploy	14.8 W	HV On	5.9 W
	Heater On	5.0 W max	Sensor/HV On	6.7 W

2.5.5 Instrument Operation

The TPA instrument is in off state when no power is applied to it. It enters sleep state when power is applied to it via Discrete Command PCD_DIST_TPA_ON (DC 05-A5), from the Power Control/Distributor (PCD). In the sleep state, the instrument will respond to hardware-decoded commands only (see Table 2.5.6-1 below); the electronic module (TPA-E) will be powered on, and hardware-generated status (bilevel) and analog housekeeping words (Word #148-149, 401-404) will be sent to telemetry.

From the sleep state, the instrument enters the active state upon receipt of the TPA_USER_ON command (DC 0D-01). In the active state, the CPU will be powered on and boot up. After boot, the CPU will run from one of the 4 EEPROM memory pages. The sensor and the HVPS can be powered on by discrete commands. Two commands are required to enable the HVPS and power it on

The boot process is automatic, unless TPA receives the TPA_MANUAL_BOOT command (DC 0D-69) within 1 minute of the TPA_USER_ON command, in which case it will initiate an interactive boot and await further boot commands (DC 0D-65, 0D-66, 0D-6A, 0D-73).

At launch, TPA will be in the off state and in the stowed configuration. During the earth-orbiting, trans-lunar, and trans-Mars phases, TPA will normally be in the off state and occasionally in the sleep or active state. During these phases, the HVPS will not be turned on.

After Mars orbit insertion, the TPA boom will be deployed using the boom deployment commands (DC 0D-34, 0D-38 and/or 0D-3A). These commands can be cancelled or aborted (before their completion and the release of cradle strap), by invoking the deployment cancellation commands (DC 0D-36, 0D-3C and/or 0D-3E) to halt the supply of power to (and the further travel of) the paraffin actuator. The deployment can take place with TPA-E in either the sleep or the active state.

After boom deployment, TPA will undergo an initial turnon sequence (using DC 0D-8F), and thereafter operate in one of its science, calibration, or instrument health check modes (DC 0D-80, 0D-83, 0D-86, 0D-89, or 0D-8F).

In a science operation mode, the TPA sensor will be programmed to a fixed set of voltages and TOF gate parameters to measure either ions or electrons, and to make a number of repeated measurements in a spin period. In each measurement, ion count data (anode pixel and TOF address of each detected

incident particle) will be transmitted from the sensor to the electronics module (TPA-E), as follows. The TPA-E controls the operation of the sensor by sequencing it through a number of sensor states using two logic lines - the DIR and CLK_OUT lines. At the start of a measurement, it changes the state of the DIR line from high to low. This triggers the TOF cycle timer, which then initiates a number of single TOF gate open and close cycles. In each TOF gate cycle, the time of arrival of each detected particle and its pixel location on the anode are determined by the charge amplifier circuitry. The corresponding TOF and anode pixel address is written to a FIFO memory. At the end of a measurement, data from both the FIFO and the hit and error counter are transmitted to the electronic module. Data from measurements over a spin period are then processed, compressed, and sent to spacecraft telemetry.

In the calibration mode, TPA will calibrate the sensor response as a function of the MCP bias voltage. In the instrument health check mode, TPA will verify the operation of the processor, program memory, HVPS, and sensor electronics.

2.5.6 Command and Telemetry

The in-flight operation of TPA is controlled by discrete commands (DC) and block commands (BC) via the spacecraft Data Handling Unit (DHU) and the peripheral interface module (PIM). The PIM ID of TPA is 0D hex. The discrete commands (DC) of TPA are listed in Table 2.5.6-1; the block commands in Table 2.5.6-2. The block command data bytes are defined in Table 2.5.6-3.

Table 2.5.6-1 TPA Discrete Commands

IC-DC	Discrete Command	Command Function	Notes
0D-01	TPA_USER_ON	user (CPU) on	*h*
0D-02	TPA_USER_OFF	user (CPU) off	*h*
0D-30	TPA_CPU_RESET_PRIM	CPU primary reset	*h*
0D-32	TPA_CPU_RESET_SECN	CPU secondary reset	*h*
0D-34	TPA_ARM	arm (for boom) deployment	*h* *
0D-36	TPA_CANCEL_ARM	cancel arm deployment	*h*
0D-38	TPA_DEPLOY_PRIMARY	deploy boom via primary	*h* *
0D-3A	TPA_DEPLOY_REDUNDNT	deploy boom via redundant	*h* *
0D-3C	TPA_CAN_DEPLOY_PRIM	cancel deploy primary	*h*
0D-3E	TPA_CAN_DEPLOY_REDN	cancel deploy redundant	*h*
0D-65	TPA_EEPROM_0	load EEPROM_0 software	*b*
0D-66	TPA_EEPROM_1	load EEPROM_1 software	*b*
0D-6A	TPA_ENTER_SETUP	enter manual setup	*b*
0D-73	TPA_EXIT_BOOT	exit manual boot	*b*
0D-80	TPA_PERI_ION	run periapsis ion mode	
0D-83	TPA_PERI_ELE	run periapsis electron mode	
0D-86	TPA_STND_ION	run standard ion mode	
0D-89	TPA_STND_ELE	run standard electron mode	
0D-A7	TPA_ENTER_IDLE	enter idle state	
0D-AE	TPA_ENTER_PROG_LOAD	enter program load state	*
0D-B0	TPA_TLM	generate TLM test pattern	
0D-B6	TPA_PRGE_MIS_TLM_BU	purge mission TLM buffer	
0D-BC	TPA_ABORT_ACTIV_CMD	abort active command	
0D-C2	TPA_SENSOR_ON	sensor power on	
0D-C7	TPA_SENSOR_OFF	sensor power off	
0D-D3	TPA_HVPS_RESET	HVPS reset enable	*
0D-D6	TPA_HVPS_ON	HVPS power on	*
0D-D9	TPA_HVPS_OFF	HVPS off and reset disable	

h = hardware command; *b* = boot-state command; * = dangerous command

Table 2.5.6-2 TPA Block Commands

IC-DC	Block Command	#	Command Function	Notes
01-22	TPA_MODE_CHANGE	3	change TLM format and rate	*d*
0D-47	TPA_GO_SUB	6	go to subroutine	*b*
0D-64	TPA_REASSIGN_PMEM	1	reassign prog memory segment	*b*
0D-69	TPA_MANUAL_BOOT	1	select manual CPU boot	*b*
0D-8F	TPA_INVOKE_OM_N	1	invoke operation mode #n	
0D-C8	TPA_SENSORGL	9	load sensor parameters	
0D-DA	TPA_HVPSGL	12	load HVPS parameters	
0D-E0	TPA_LOAD_128	132	load 128 bytes	*
0D-E5	TPA_LOAD_8	12	load 8 bytes	*
0D-E9	TPA_MEMORY_DUMP	6	memory dump	

d = DHU command; * = dangerous command; # = number of command data bytes

Table 2.5.6-3 TPA Block Command Data Definition

IC-DC	Block Command	byte	Definition
01-22	MODE_CHANGE	0	format no. (5 lsb)
		1	edition rate (4 lsb) 3-D = 64-65536 bps
		2	x/s-bit rate 3-C = 64-32768 bps
0D-47	TPA_GO_SUB	0-1	program start address
		2-3	program checkcode
		4	program code page
		5	crc byte
0D-64	TPA_REASSIGN_PMEM	0	program memory segment number
0D-69	TPA_MANUAL_BOOT	0	manual boot code
0D-8F	TPA_INVOKE_OM_N	0	operation mode number
0D-C8	TPA_SENSORGL	0	ntof - max no. of tof bins
		1	ngate - tof gate open
		2-3	n#periods - no. of TOF periods
		4	nthreshold - threshold control
		5	nlast - stop delay
		6	nfirst - start delay
		7	nbin - time-of-flight bin size
		8	checksum
0D-DA	TPA_HVPSGL	0	VEA: volts/2.55
		1	VEA polarity: 0/1=-/+
		2	VES: volts/2.55
		3	VES polarity: 0/1=-/+
		4	VTF: volts/10.2
		5-6	VSA: volts * 4.096
		7	VGD: volts * 0.170
		8	VCP: volts * 0.170
		9	VAN: volts * 0.102
		10	HV polarity: 0/1=-/+
		11	checksum
0D-E0	TPA_LOAD_128	0-1	program upload start address
		2	code page
		3-130	upload data
		131	checksum byte
0D-E5	TPA_LOAD_8	0-1	program upload start address
		2	code page
		3-10	upload data
		11	checksum byte
0D-E9	TPA_MEMORY_DUMP	0-1	memory dump start address
		2-3	number of bytes
		4	code page
		5	checksum byte

Table 2.5.6-4 Telemetry Edition Formats Containing TPA Science Data

Fmt	Operation Mode	HK Packet	TPA Packet	PLANET-B kpbs	TPA packets/s
05	TPA Deployment	8: 8n (n=0-7)	24: 8n+2,4,6	4	3/8
10	Obs. Periapsis	4: 16n(n=0-3)	8: 8n+5	64,32	2,1
11	Obs. Standard	8: 8n (n=0-7)	8: 8n+5	64..,2,0.5,0.25	2,...,1/16, 1/64,1/128
13	UVS/XUV	8: 8n (n=0-7)	4: 16n+11	64,...,2	1,...,1/32
14	MIC	8: 8n (n=0-7)	4: 16n+11	64,...,2	1,...,1/32
15	WFC-M	8: 8n (n=0-7)	4: 16n+11	64,...,2	1,...,1/32
16	MDC	8: 8n (n=0-7)	4: 16n+11	64,...,2	1,...,1/32

HK Packet ID = 01h; TPA Packet ID = 14h; 1 packet repetition pattern = 4 sec at peak bit rate.

Table 2.5.6-5 TPA Status (Bilevel) Housekeeping Words

Addr	Wd#	Word	Bit	Word	Item	Status 1	Status 0
F800	148	TPA1	b0	CPU_MODE_BOOT	CPU-mode	Boot	Normal
			b1	TPA_E_U_MEM_MAP	TPA-E-memory map	NVM1	NVM0
			b2	PIM_I/F_ERR	PIM I/F error	Error	No Error
			b3	WDT_ERR	Watchdog timeout	Error	No Error
			b4	DEPLOY_REDUNDNT	Deploy redundant	Rel	Set
			b5	DEPLOY_PRIMARY	Deploy primary	Rel	Set
			b6	ARM	arm	Rel	Set
			b7	CPU_PWR	CPU power	On	Off
F801	149	TPA2	b0	HVPS_PWR	HVPS power	On	Off
			b1	SNSR_DGTL_PWR	sensor digital pwr	On	Off
			b2	SNSR_HTR_PWR	sensor heater pwr	Disable	Enable
			b3	HVPS_RESET	HVPS reset	Enable	Disable
			b4	-	(spare)	-	-
			b5	-	(spare)	-	-
			b6	PIM_STATUS_S1	PIM Status S1	S1 S0 status	
			b7	PIM_STATUS_S0	PIM Status S0	1 1 DC-WRT	
						1 0 BC-WRT	
						0 1 TLM-READ	
						0 0 ECW/EMR	
F802	150	TPA3	b0	MED_V_4_VTF	MED-4 (VTF)	Active	Inactive
			b1	MED_V_3_VES	MED-3 (VES)	Active	Inactive
			b2	-	(spare)	-	-
			b3	MED_V_1_VEA	MED-1 (VEA)	Active	Inactive
			b4	HV_VAN	HV-4 (VAN)	Active	Inactive
			b5	HV_VCP	HV-3 (VCP)	Active	Inactive
			b6	HV_VGD	HV-2 (VGD)	Active	Inactive
			b7	HV_VSA	HV-1 (VSA)	Active	Inactive
F803	151	TPA4	b0-b7	SW_STAT_CODE	SW status code	00 No Error	
						01-08 Boot	
						09-3F SW Fn ID	
						40-4F Warning	
						80-8F Error	

* b0 = msb

The Planet-B TPA telemetry consists of both status (bilevel) and housekeeping data in Housekeeping packets (Packet ID = 01h), and science data in TPA packets (Packet ID = 14h). Table 2.5.6-4 lists Planet-B telemetry edition formats (packet repetition patterns) which contain TPA science telemetry packets, and the allocations of both housekeeping (HK) and TPA packets therein. Table 2.5.6-5 lists TPA status (bi-level) data. Table 2.5.6-6 lists TPA analog housekeeping data.

Table 2.5.6-6 TPA Analog Housekeeping Words

PIM Addr	Word No	Word	Item	Conversion
0D-F804	401	TPA_PCU_T	PCU Temperature (C)	1.94 x - 273
0D-F805	402	TPA_S_T	Sensor Temperature (C)	
0D-F806	403	CRADLE_T	Cradle Temperature (C)	
0D-F807	404	BOOM_C_R	Boom-cradle res (ohm)	-53 x + 13515
05-8014	236	TPA_I	TPA Current draw (mA)	19.6 x

2.5.7 Special Requirements

1. The TPA boom (TPA-S-B) is restrained by a pair of biphenyl blocks at launch, which sublimates in vacuum. The block needs to be removed for vacuum testing and replaced afterward, and must not be handled in confined space before launch.

2. The paraffin in the paraffin actuator in the cradle melts at 82°C. The TPA instrument (including the cradle) must be kept below this temperature.

3. The TPA sensor (TPA-S-A) uses a microchannel plate (MCP) which requires continuous N_2 or dry air purge before launch, to protect it from humidity (water vapor) and dust contamination.

Acknowledgement We would like to acknowledge the valuable contributions of Dr. B. A. Whalen, the original PI for TPA before his retirement from the National Research Council Canada (NRCC). We also like to acknowledge the engineering, technical, and/or programmatic contributions of T. Cameron, C. Davis, G. Enno, M. J. Greffen, E. P. King, C. G. Marcellus, M. Sepa, and P. Smith at University of Calgary (UC); A. Pilon and G. Sebasta at NRCC, Dr. R. H. Hum and V. Wehrle at the Canadian Space Agency (CSA); A. Cardinal at Public Works and Government Service Canada (PWGSC); I. Vuk at COM DEV (sensor electronics); B. Lee and D. Perrone at CAL Corporation (electronics module); D. Johnson and J. Thomson at Pakwa (boom and cradle); and A. Huber at Amptek (high voltage power supply).

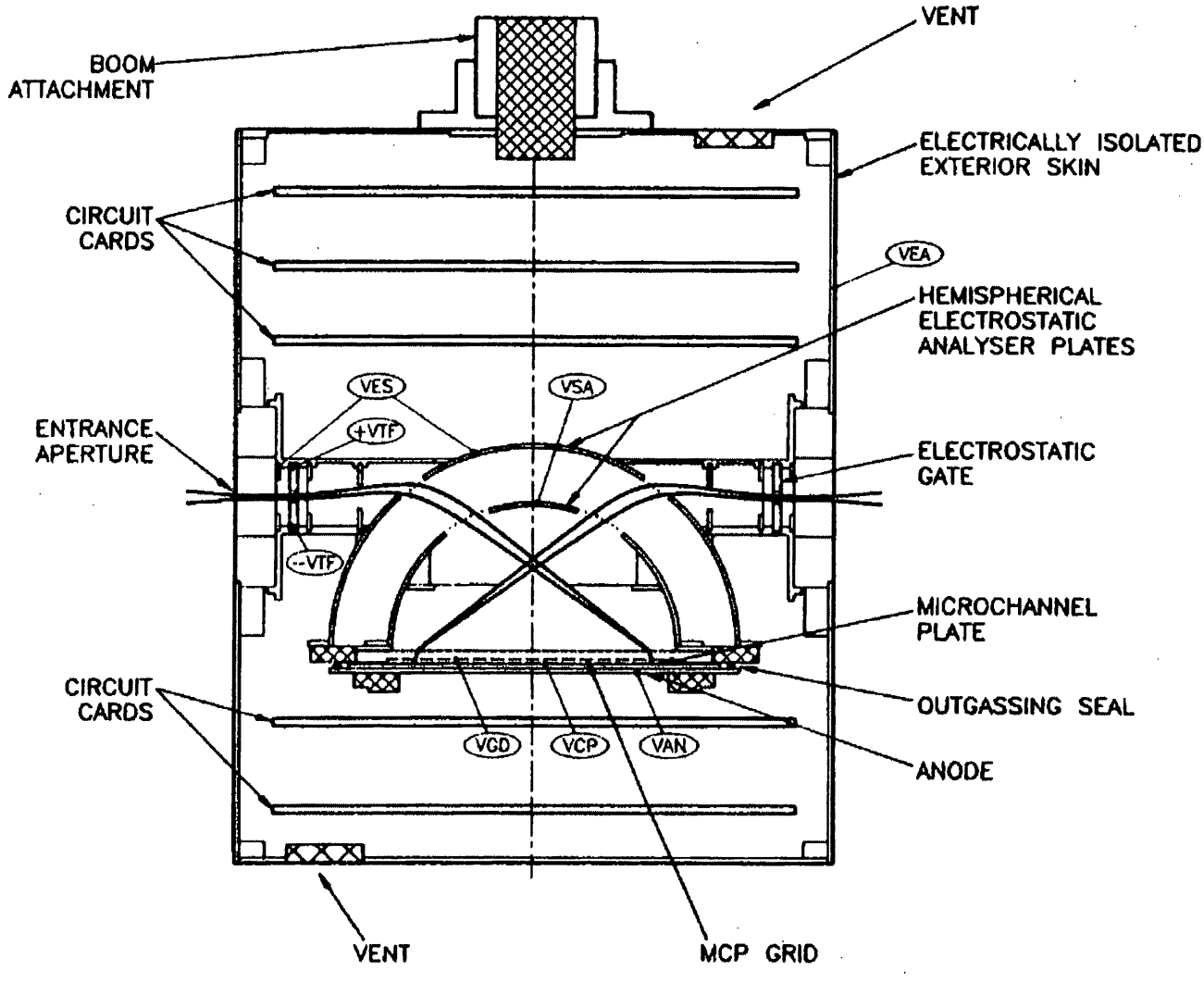

Figure 2.5.2-2. Schematic cross section of TPA sensor through its mounting axis.

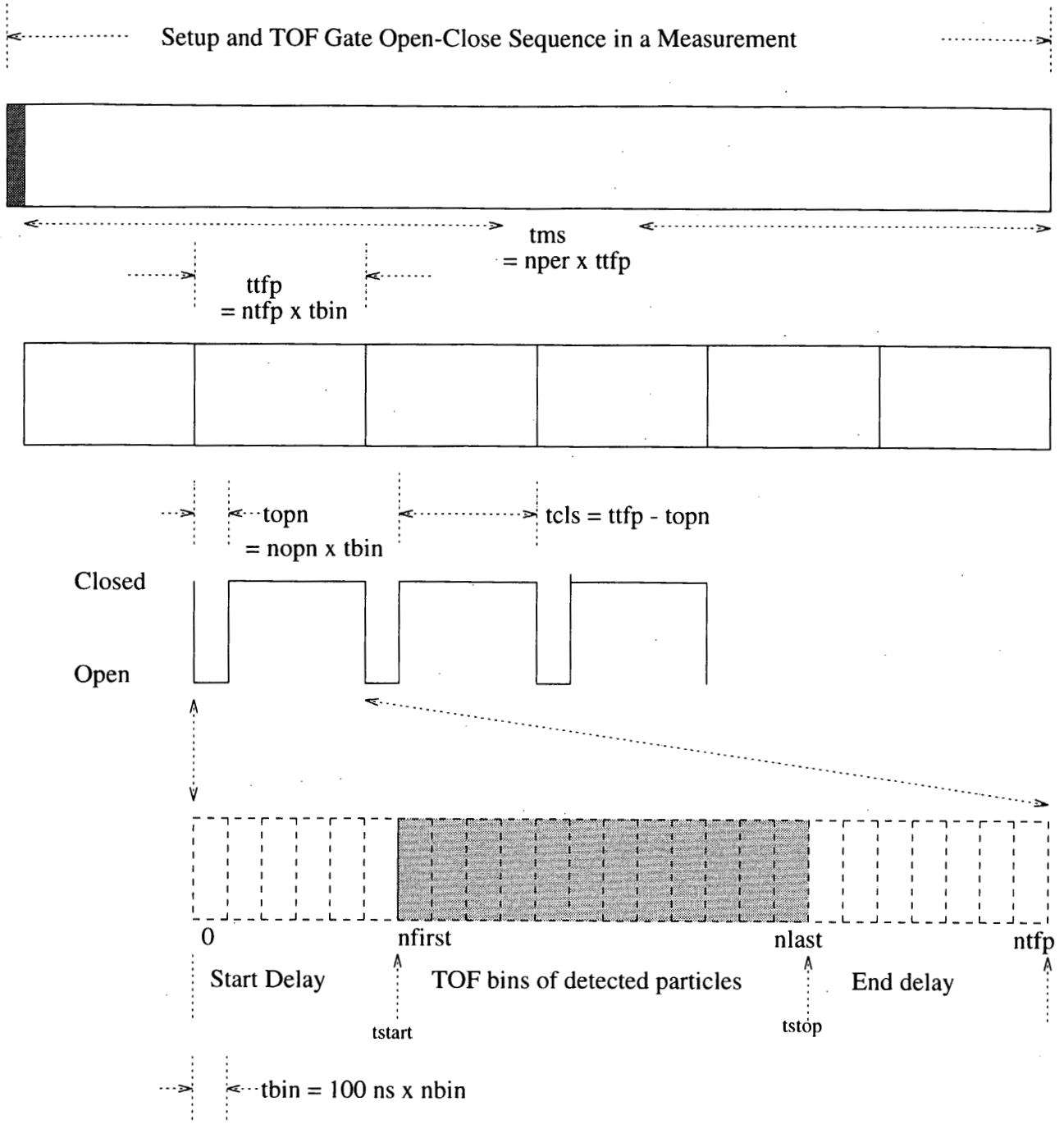

tms = time of measurement
ttfp = time of 1 time-of-flight period
topn = time-of-flight gate open period
tcls = time-of-flight gate close period
tstart = start time of gating of detected particles
tstop = stop time of gating of detected particles

Figure 2.5.2-3 Time-of-flight (TOF) gate open and close sequence in a measurement.

2.6. The Ion Mass Imager (IMI)

Principal Investigator :	Rickard Lundin	IRF-K*	rickard@irf.se
Co-Investigator :	Masatoshi Yamauchi	IRF-K*	yama@irf.se
	Masafumi Hirahara	Rikkyo U.	hirahara@se.rikkyo.ac.jp
	Olle Norberg	IRF-K*	olle@irf.se
	Stas Barabash	IRF-K*	stas@irf.se
	Hans Borg	IRF-Um**	hans.borg@physics.umu.se
	Toshifumi Mukai	ISAS	mukai@gtl.isas.ac.jp
	Hajime Hayakawa	ISAS	hayakawa@gtl.isas.ac.jp
Manufacturer :		IRF-K*	
Technical Manager :	Sven Olsen	IRF-K*	sven@irf.se

*) IRF-K: Swedish Institute of Space Physics, Box 812, S-98128 Kiruna, Sweden.
**) IRF-Um: Swedish Institute of Space Physics, Umeå University, Umeå, Sweden.

2.6.1. Scientific Objectives

The ion mass imager (IMI) on board the Planet-B spacecraft measures positive ions of energies between 10 eV/q and 35 keV/q with a mass resolution high enough to resolve the most important ion species (H^+, He^{++},He^+, O^{++}, O^+, O_2^+). IMI will be operated together with the other scientific instruments on Planet-B to fulfill the overall scientific objective of the mission, to study the Martian environment with emphasis on the upper atmosphere interaction with the solar wind. Specifically, IMI will be used to address the question of ion composition in the Martian environment, non-thermal ion escape, and ion pick-up by the solar wind. The objective to study possible dust rings around Mars will also be addressed by IMI, since the instrument has a wide mass range covering a dusty plasma component. Identification of the flow direction is very important, necessitating an instrument with three-dimensional (3D) coverage.

(1) Charged heavy atoms and molecules

The Martian plasma environment has been explored by Mars 2, 3, 4, 5, and Phobos-2 spacecraft. Many of the important plasma boundaries were discovered such as bow-shock, the magnetopause, the magnetospheric cavity, and a plasma tail. A boundary layer with a low energy component of presumably ionospheric origin was also observed near Mars. Yet the Martian plasma environment still remains somewhat of a puzzle. The Martian magnetosphere, as defined by the region of reduced plasma flow, is more extended than previously anticipated, is dominated by ions of Martian origin, e.g. O+ and molecular ions, and has several characteristics similar to that of the solar wind interaction with comets. One objective of the Mars mission is to clarify these matters.

Because of the small intrinsic magnetic field of Mars, the Martian upper atmosphere (dominated by O_2^+) is exposed to the solar wind. This implies that ionization in the upper atmosphere is due to both solar UV and solar wind plasma interaction. The latter may take several forms, e.g., a viscous-like interaction, and the critical velocity ionization by the solar wind interaction with the neutral atmosphere. Meanwhile, the Phobos-2 found an escape of plasma (outflow of atmospheric oxygen) at Mars, of the order 1 kg/s. This corresponds to a loss of the existing Martian atmosphere in 108 years, which puzzles us.

Another interesting topic to study is the solar wind interaction with the two Martian satellites Phobos and Deimos. They are somewhat "light weight" in terms of mass density (1.8 ± 0.5 g/cm^3 for Phobos), indicating that they contain a significant fraction of volatile elements (e.g. H_2O and CO_2 ice). If so, a very thin atmosphere is expected to form, most likely on the sun-facing side and in particular after meteorite impacts. This explains the observation from the Phobos-2 spacecraft of the comet-like behavior of Phobos and Deimos as well as the indications of an oxygen corona in the Phobos orbit. Ionization of this molecules due to interaction with the solar wind definitely play an important role for such escape.

(2) Dusty Plasma

One of more fascinating properties of planetary environment is the existence of ring structures. Although these are known to exists around the giant planets, speculations on ring structures around the smaller planets have also occurred. As for Mars the speculations on a dust ring close to the Phobos orbit dates back to 1971. Micro-meteorite impacts on the Phobos surface may substantially contribute to the hot oxygen corona around Mars. Study of the "dusty" plasma behavior is interesting from a cosmogonic point of view too. Fine grains with masses up to 10^{12} of the molecular weight may, if electrically charged, be strongly controlled by magnetic and electric forces. Such a "dusty" plasma is then likely to be the source of larger grains which eventually accrete into larger bodies. Magnetic and electric forces are therefore expected to control matter over an extended period of time throughout the formation of a planetary system. Therefore, measuring dusty plasma is also an important scientific objective.

(3) Task for IMI

Under these circumstances, we need an ion composition instrument which covers dusty plasma. Identification of the flow direction is also important, so that the instrument must have 3D coverage. The primary and secondary objectives of IMI are summarized in the followings..

Primary Objectives	**Primary Scientific Instruments (SI)**	**Supplemental SI**
Non-thermal ion escape	all plasma	B, wave, dust
Tail ion outflow	all plasma	B, wave, dust
Acceleration processes	all plasma	B, wave, dust
Filamental structures	all plasma	B, wave, dust
Boundaries (bow-shock, ionopause, mass-loading boundary, etc.)	all plasma, B	wave
Ionosphere (SW interaction, dawn-dusk asymmetry, thin-air effect)	all plasma	B, wave, Camera
Dust Ring (of Phobos and Deimos)	dust counter, all plasma	B, waves, Camera
Intrinsic magnetic field	B	all plasma

Secondary Objectives	**Primary Scientific Instruments (SI)**	**Supplemental SI**
Solar wind dynamics	all plasma, B, wave, dust counter	
Perpendicular heating / Cavitons in weak B-fields (cf. Earth)	all plasma, wave	B
Acceleration by parallel E field in weak B-fields (cf. Earth)	all plasma, wave	B
Bi-directional electron/ion flow in weak B-fields (search)	all plasma, B	wave
Polar wind / Corona	all plasma	B, wave

2.6.2. Instrument Detection System

The IMI instrument has a heritage from ASPERA on the Phobos mission (1988), TICS on the Freja mission (1992), and the IMIS on the Mars-96 mission (1996, launch failed). The overall configuration is shown in Figure 1. The instrument consists of two parts: IMI-S and IMI-E (including DPU). The functional block diagram of IMI is shown in Figure 2. IMI is located in one of the corners of the Planet-B spacecraft body, with the normal vector of the aperture plane perpendicular to the spacecraft spin axis as shown in Figure 3. This location ensures that IMI will cover almost the whole 4π unit sphere in half a spacecraft spin, or in roughly 4s. A small part of the field-of-view will be shadowed by one of Planet-B's solar arrays.

The IMI-S comprises an electrostatic "top-hat" analyzer with 360° x 5° field of view in 16 azimuthal sectors (22° x 5°) with 90° deflection angle, followed by a cylindrical sector magnet momentum analyzer with lateral magnetic field. Particles are detected using a microchannel-plate assembly with position sensitive features (analogue detection system for both azimuthal (angular) direction and radial (mass) direction). The particle imaging system (360° field of view) provides simultaneously the azimuth and mass per unit charge (m/q) of the incident ion distribution in a 32 x 32 (angle mass) matrix.

The IMI-E contains one 16-bit processors (DPU) for spectrometer control, commanding, telemetry-interfacing, on-board data handling, and on-board processing of scientific data (computing e.g. moments of the plasma distribution function). The IMI-E also contains an HV supply which is distributed via opt-coupler to MCP bias (nominal setting = 180 ≈ 2.5 kV ± 0.3 kV), deflection system (nominal setting = 0 to 255 ≈ -11V to -4 kV) and post-acceleration system (nominal setting = 0 or 115 ≈ 0 or 2.3 kV) with 12 bit accuracy (0.75 to 4000 V) at its bottom part. Since the lowest voltage at the inner wall of the top-hat (deflection) is not zero, the outer wall of the top-hat is biased to -12V in order to detect low energy (< 100 eV) ions, whereas the outer "skin" of the entire top-hat is shielded by a grounded aluminum tape to prevent photo-electrons.

As new feature of IMI, the HV settings are adjusted according to keep the same voltage against floating. We define default value at 20°C, and make adjustment for given deviation of temperatures T1 (electric box) and T2 (sensor):

	default setting	**reference T**	**adjustment**
deflection:	table (at 20°C)	T1 (electric box)	-1 point / 7 degree of ΔT1
MCP bias:	180 (at 20°C)	T2 (sensor)	+2 points / 3.5 degree of ΔT2
post accel.:	115 (at 20°C)	T2 (sensor)	+1 point / 3.5 degree of ΔT2

The mass detection technique utilized by IMI is ideal for the detection of ions with all masses (1 to $\approx 10^{12}$ amu), including submicron sized "dusty" plasma components, an "unexplored" plasma component believed to be of great importance in some cosmogonic scenarios. Even with the analogue detection system, we have a resolution as shown in Figure 4.

2.6.3. Size, Weight, Thermal Specification and Power Consumption

(1) IMI-S

weight	1.50 kg ± 0.01 kg	
shape	18 × ϕ12 cm	Figures 1 and 3
Temp. for best performance	T2 = – 15 °C ~ 40 °C	warms up by itself (*)
operatable Temp.	T2 = – 30 °C ~ 65 °C	warms up by itself (*)
required Temp. for storage	T2 = – 50 °C ~ 65 °C	
safe Temp. when OFF-to-ON	T2 = – 50 °C ~ 40 °C	warms up by itself (*)
safe Temp. when ON-to-OFF	T2 = any	

(*) Thermally isolated and without heater. Sensor itself warms up with its own power. Since the thermometer is installed very close to the AD converter, it is normally warmer than IMI-E by about 15 degree.

(2) IMI-E

weight	1.49 kg ± 0.01 kg	
shape	18 × 17 × 9 cm	Figures 1 and 3
Temp. for best performance	T1 = – 15 °C ~ 40 °C	warms up by itself (*)
operatable Temp.	T1 = – 30 °C ~ 55 °C	warms up by itself (*)
required Temp. for storage	T1 = – 50 °C ~ 55 °C	
safe Temp. when OFF-to-ON	T1 = – 50 °C ~ 40 °C	warms up by itself (*)
safe Temp. when ON-to-OFF	T1 = any	

(*) Since the electric circuit warms up with its own power and the thermal conduction is not perfect, it is about 5-10 degree warmer than the satellite platform.

(3) Total Power Consumption (IMI-S + IMI-E)

Power Consumption from Bus line including DC/DC conversion loss at 20°C.

mode	bus=18V	bus=22V	bus=26V	IMI-S only
HV-on	6.7 W (420 mA)	6.8 W (310 mA)	7.3 W (280 mA)	2.5 W
FIFO-connect (=HV off)	5.8 W (320 mA)	6.2 W (280 mA)	6.9 W (265 mA)	2.1 W
CPU-on (=Standby)	5.6 W (310 mA)	6.0 W (270 mA)	6.6 W (255 mA)	2.1 W
CPU-off (=dist-on)	1.35 W (75 mA)	1.6 W (75 mA)	2.0 W (75 mA)	0 W
OFF	0 W	0 W	0 W	0 W

2.6.4. Instrument Specification

Nominal-mode energy range	10 eV/q - 35 keV/q (32 steps)
SW-mode energy range	100 eV/q - 10 keV/q (32 steps)
Energy accuracy	±10 eV/q
Sector difference of Energy	maximum 2.5 %
Energy passband	ΔE/E = 8 % ± 0.5 %
Entrance angle (elevation)	4.6° ± 0.5°
Azimuth width	20±0.5 deg (flat for 18°±1° with ±20% variation)
Max. angular resolution Azimuth	Δtheta=22° (16 sectors/360°(*1))
Max. angular resolution Elevation	Δphi=22° (16 sweeps/1 spin)
Mass range	1 - 10^{12} amu/q (see Figure 5)
Dynamic range (full particle image)	0.1 - 10^{6} cts/s
Sampling time / full energy sweep	0.5 s
Designed geometric factor (22°)	2 • 10-3 (cm2 str /cts)
Measured geometric factor (22°)	3.5 (± 1) • 10-4 (cm2 str /cts)
Sector difference of efficiency	maximum 20 % (*2)
Conversion Factor (22°)	≈ 3 • 10-5 (cm2 str keV/keV/cts)
Conversion Factor (360°)	≈ 4.5 • 10-4 (cm2 str keV/keV)

*1) one sector (sector 0) is hidden by mast
*2) except one sector (sector 15) which has half the efficiency

2.6.5. Operation

2.6.5.1. Raw Data Production:

Spin period: **8 ± 0.5 sec** (cycle time / image = half spin ≥ 3.75 sec)
Mass channels: **32**
Sectors (ϕ): **16** (raw data = 32×16 = 512 word / each energy sampling time)
Energy ranges: **0.01 - 40 keV** (E_n–E_{n-1}/E_n = 0.3 for 32 step)
Basic energy sweep: **468.75 ms** ≈ Sample time × 32 + Offset time (52.75 ms)
Sample time: **13 ms** (fixed in hardware) & **26 ms** (integration in software)
Energy steps: **32** (fixed in hardware) & **16** (integration in software)

note: Data output rate from MCP (16×32=512 sectors/step) for different sample-time (13, 26, 52 msec) par each energy step (but cycle time = 468.75 ms is fixed) is:
2 byte × 512 × 32 steps / 468.75 ms = **560 kbps** (13 msec / step)
2 byte × 512 × 16 steps / 468.75 ms = **280 kbps** (26 msec / step)

2.6.5.2. Telemetry allocation for IMI

total telemetry rate		64k	32k	16k	8k	4k	2k	1k	512	256	128	64
Mode	IMI-allocation											
Obs-P (periapsis)	IMI = 3/16	o 12k	o 6k	o 3k								
Obs-S (standard)	IMI = 3/16	o 12k	o 6k	o 3k	o 1.5k	o 768	o 384	Δ 192	o 96	Δ 48		Δ 12
UVS-priority	IMI = 3/32	o 6k	o 3k	o 1.5k	o 768	o 384	o 192					
MIC-priority	IMI = 3/32	o 6k	o 3k	o 1.5k	o 768	o 384	o 192			Δ 24		Δ 6
WFC-priority	IMI = 3/32		o 3k	o 1.5k	o 768	o 384	o 192			Δ 24		Δ 6
MDC-priority	IMI = 3/32		o 3k	o 1.5k	o 768	o 384	o 192			Δ 24		Δ 6

One frame = 512 byte (in fact, only 432 byte data) = minimum unit for scientific data.

2.6.5.3. Integration Options

Integration time: half spin (3.75 sec) , 1 spin (7.5 sec) , 2 spin (15 sec) , 4 spin (30 sec)

Directions: We divide the 4π space linearly (cf. Appendix **§2.6.8.** for binning of the sectors)
2 dir (#θ=2, #ϕ=1) 4 dir (#θ=4, #ϕ=1) 8 dir (#θ=4, #ϕ=2) 16 dir (#θ=8, #ϕ=2)
32 dir (#θ=8, #ϕ=4) 64 dir (#θ=8, #ϕ=8) 128 dir (#θ=16, #ϕ=8)
where, $0<\theta<2\pi$ is the angle from the spin axis, and $0<\phi<\pi$ is the spin phase angle.

Mass channels (cf. Figure 5):

32 mass: 0 (=heavy), 1, 2, 3, 4, 5, ..., 31 (=light)
16 mass: 0+1, 2+3, 30+31
6 mass: see below
4 mass: see below
3 mass: see below

	M3A	M3B	M3C	M4A	M4B	M4C	M6A	M6B	M6C
P+	P	P	Δ P	P	P	Δ P	P	P	Δ P
He++	alpha	He	Δ alpha	alpha	alpha	Δ alpha	alpha	alpha	Δ alpha
He+	heavy	heavy	Δ heavy	mainly O	He+	Δ O	He+	He+	Δ He+
O++					heavy		O	O++	Δ O
O+								O+	
O2				heavy		Δ heavy	O2	heavy	Δ O2
dust							dust		Δ dust

Δ means a narrow version of mass range

Moment (16 bit/word)

	integration time			output data rate
mode	density × 1	velocity × 3	pressure × 3	(per each mass)
NVP	1 spin	1 spin	2 spin	11 word / 2 spin = 11 bps
	N	Vx, Vy, Vz	Pxx, Pyy, Pzz	

This results 33*16 = 528 bits/package for 3 masses. Assuming a spin-period of 8 seconds this corresponds to a TM-rate of 33 bps. This data will not be compressed and on top of this comes the header and for some modes the ExM:16x16 (compressed) data matrix.

Energy-Mass matrix

mode	Mass bins	Energy bins	bit / matrix / direction	
EM.32a	32	32	1024 word × 8 bit/word	= 8,192 bit
EM.32b	"	16	512 word × 8 bit/word	= 4,096 bit
EM.16a	16	32	512 word × 8 bit/word	= 4,096 bit
EM.16b	"	16	256 word × 8 bit/word	= 2,048 bit

2.6.6. Suggested Telemetry Content from IMI

TM allocation for IMI is only 432 Bytes out of 512 Bytes (per packet). The rest is reserved for S/C. We down load the following data (combination)

(1) Image data: 16 bit word --> 8 bit word
(2) Energy-Mass Matrix: --> 8 bit word
(3) Moment : --> 16 bit word (calculate only during low bit rate)

There are six operational mode groups. The instrument is commanded into either a group (without data rate specification) or a submode within a group at a target data rate:

Mode	Description	Comments
A	Nominal mode	Four species (H^+, He^{++}, O^+, heavier ions), and energy-mass matrices periodically
B	Six species mode	Six species (H^+, He^{++}, He^+, O^+, O_2^+, heavier ions)
C *	Light-ion resolution mode	Maximum mass resolution, optimized for low mass ion species (H^+ to O^+)
D *	Heavy-ion resolution mode	Maximum mass resolution, optimized for high mass ion species (O^+ to dust)
E	Energy band mode	Gives a subset of 16 steps from the energy scan. Maximum energy-mass resolution.
F	Angular resolution mode	Optimized for high angular resolution, four species (H^+, He^{++}, O^+, heavier ions),

(*) IMI can be operated in such a way that it alternates between modes C and D.

The instrument is then allowed to change the submode within the group in accordance to the data compression scheme. The energy-scans are synchronized with the spacecraft spin phase, and 16 scans are evenly distributed during a spin period. IMI will be operated in different modes depending on the spacecraft orbital phase.

(A) Nominal-A mode:
We obtain the energy-mass matrix and the integrated image data. We set 2.3 kV post-acceleration (nominal mass mode). The following table shows the integration (direction and mass) scheme for given telemetry rates:

TLM for IMI	output format: # energy × # mass	# dir. θ × ϕ	time per E-step	total data / integration	= before compression
12 kbps	32 steps × 4 mass + EM.32a	16 × 8 8 × 2	13 msec	16,384 word / 0.5 spin + 16,384 word / 0.5 spin	= 65,528 bps
6 kbps	32 steps × 4 mass + EM.32a	8 × 8 4 × 2	13 msec	8,192 word / 0.5 spin + 8,192 word / 0.5 spin	= 32,768 bps
3 kbps	32 steps × 4 mass + EM.32a	8 × 4 4 × 2	13 msec	4,096 word / 0.5 spin + 8,192 word / spin	= 16,384 bps
1.5 kbps	16 steps × 4 mass + EM.32a	8 × 4 4 × 1	13 msec	2,048 word / 0.5 spin + 4,096 word / spin	= 8,192 bps
768 bps	16 steps × 4 mass + EM.32a	8 × 4 4 × 1	13 msec	2,048 word / spin + 4,096 word / 2 spin	= 4,096 bps
384 bps	16 steps × 4 mass + EM.32a	8 × 2 4 × 1	13 msec	1,024 word / spin + 4,096 word / 4 spin	= 2,048 bps
192 bps	16 steps × 4 mass + EM.32b	4 × 2 4 × 1	26 msec	512 word / spin + 2,048 word / 4 spin	= 1,024 bps
96 bps	16 steps × 4 mass + EM.16b	4 × 2 4 × 1	26 msec	512 word / 2 spin + 1,024 word / 4 spin	= 512 bps
48 bps	NVP × 3 mass + EM.16b	2 × 1 2 × 1	26 msec	66 word* / 4 spin + 512 word / 8 spin	= 33 bps + + 64 bps
24 bps	NVP × 3 mass + EM.16b	2 × 1 2 × 1	26 msec	66 word* / 8 spin + 512 word / 16 spin	= 16.5 bps + + 32 bps
12 bps	NVP × 3 mass + EM.16b	2 × 1 2 × 1	26 msec	66 word* / 16 spin + 512 word / 32 spin	= 8.25 bps + + 16 bps
6 bps	NVP × 3 mass	2 × 1	26 msec	66 word* / 32 spin	= 5 bps

θ dir = # of angular sector division & # ϕ dir = # of spin sector division
energy = # of energy step / sweep & # mass = # of mass sectors
E-step = duration of each energy step & word* = 16 bit/word (otherwise, 8 bit/word)
total data rate = # of word per each complete cycle / the cycle time (= 0.5 spin - 4 spin)
NVP = Moment modes & EM = Energy-Mass Matrix modes

(B) Nominal-B mode (this can be omitted if CPU is not enough):
We obtain only the integrated image data. We set 2.3 kV post-acceleration (nominal mass mode). The following table shows the integration (direction and mass) scheme for given telemetry rates:

TLM for IMI	output format: # energy × # mass	# dir. θ × ϕ	time per E-step	total data / integration	==> before compression
12 kbps	32 steps × 6 mass	16 × 8	13 msec	24,576 word / 0.5 spin	= 49,152 bps
6 kbps	32 steps × 6 mass	8 × 8	13 msec	12,288 word / 0.5 spin	= 24,576 bps
3 kbps	32 steps × 6 mass	8 × 4	13 msec	6,144 word / 0.5 spin	= 12,288 bps
1.5 kbps	16 steps × 6 mass	8 × 4	26 msec	3,072 word / 0.5 spin	= 6,144 bps
768 bps	16 steps × 6 mass	8 × 4	26 msec	3,072 word / spin	= 3,072 bps
384 bps	16 steps × 6 mass	8 × 2	26 msec	2,048 word / spin	= 1,536 bps
192 bps	16 steps × 6 mass	4 × 2	26 msec	768 word / spin	= 768 bps
96 bps	16 steps × 6 mass	4 × 2	26 msec	768 word / 2 spin	= 384 bps
< 48 bps	same as mode-A				

θ dir = # of angular sector division & # ϕ dir = # of spin sector division
energy = # of energy step / sweep & # mass = # of mass sectors
E-step = duration of each energy step
total data rate = # of word per each complete cycle / the cycle time (= 0.5 spin - 1 spin)

(C) / (D) Mass resolution modes:
We obtain only the integrated image data. We set
(C) fixed low (e.g. 0.2 kV) post-acceleration and alternate upper
(D) fixed high (e.g. 2.3 kV) post-acceleration.
The following table shows the integration (direction and mass) scheme for given telemetry rates:

TLM for IMI	output format: # energy × # mass	# dir. θ × ϕ	time per E-step	total data / integration	==> before compression
12 kbps	32 steps × 32 mass	8 × 4	13 msec	32,768 word / 0.5 spin	= 65,536 bps
6 kbps	32 steps × 16 mass	8 × 4	13 msec	16,384 word / 0.5 spin	= 32,768 bps
3 kbps	32 steps × 16 mass	8 × 2	13 msec	8,192 word / 0.5 spin	= 16,384 bps
1.5 kbps	32 steps × 16 mass	4 × 2	13 msec	4,096 word / 0.5 spin	= 8,192 bps
768 bps	32 steps × 16 mass	4 × 2	13 msec	4,096 word / spin	= 4,092 bps
384 bps	16 steps × 16 mass	4 × 2	26 msec	2,048 word / spin	= 2,048 bps
192 bps	16 steps × 16 mass	4 × 1	26 msec	1,024 word / spin	= 1,024 bps
96 bps	16 steps × 16 mass	4 × 1	26 msec	1,024 word / 2 spin	= 512 bps
< 48 bps	same as mode-A				

θ dir = # of angular sector division & # ϕ dir = # of spin sector division
energy = # of energy step / sweep & # mass = # of mass sectors
E-step = duration of each energy step
total data rate = # of word per each complete cycle / the cycle time (= 0.5 spin - 2 spin)

(E) Energy resolution mode:
We sweep a limited range of particle energy (default is 0.01 - 35 keV). We reduce the energy range to **0.1 - 10 keV**. The energy range (the starting step number) is to be set by BC command. The followings table shows the integration scheme.

TLM for IMI	output format: # energy × # mass	# dir. θ × ϕ	time per E-step	total data / integration	= before compression
12 kbps	32 steps × 32 mass	8 × 4	13 msec	32,768 word / 0.5 spin	= 65,536 bps
	(or EM.32a only)	(8 × 4)		(")	(")
6 kbps	32 steps × 32 mass	8 × 2	13 msec	16,384 word / 0.5 spin	= 32,768 bps
	(or EM.32b only)	(8 × 4)		(")	(")
3 kbps	32 steps × 32 mass	4 × 2	13 msec	8,192 word / 0.5 spin	= 16,384 bps
	(or EM.32b only)	(8 × 2)		(")	(")
1.5 kbps	32 steps × 32 mass	4 × 2	13 msec	8,192 word / spin	= 8,192 bps
	(or EM.32b only)	(4 × 2)		(4,096 word / 0.5 spin)	(")
768 bps	16 steps × 6 mass	4 × 2	13 msec	768 word / spin	
	+ EM.32a	2 × 1		+ 2,048 word / spin	= 3,584 bps
	(or EM.32b only)	(4 × 2)		(4,096 word / spin)	(4,096)
384 bps	16 steps × 6 mass	4 × 2	13 msec	768 word / spin	
	+ EM.32a	2 × 1		+ 2,048 word / 2 spin	= 1,792 bps
192 bps	16 steps × 4 mass	4 × 2	13 msec	512 word / spin	
	+ EM.32a	2 × 1		+ 2,048 word / 4 spin	= 1,024 bps
96 bps	16 steps × 4 mass	4 × 2	13 msec	512 word / 2 spin	
	+ EM.32a	2 × 1		+ 2,048 word / 8 spin	= 512 bps
48 bps	EM.32a	2 × 1	13 msec	2,048 word / 16 spin	= 128 bps
24 bps	EM.32a	2 × 1	13 msec	2,048 word / 32 spin	= 64 bps
12 bps	EM.16b	2 × 1	26 msec	1,024 word / 32 spin	= 16 bps
6 bps	NVP × 3 mass	2 × 1	26 msec	66 word* / 32 spin	= 5 bps

* Inside () is the version at 980430, which is to be replaced to the planed format without ()

(F) Angular resolution mode: We compensate for best spatial-temporal resolution.

TLM for IMI	output format: # energy × # mass	# dir. θ × ϕ	time per E-step	total data / integration	==> before compression
6 kbps	32 steps × 6 mass	16 × 8	13 msec	16,384 word / 0.5 spin	= 32,764 bps
6 kbps	32 steps × 4 mass	16 × 8	13 msec	16,384 word / 0.5 spin	= 32,764 bps
3 kbps	16 steps × 4 mass	16 × 8	13 msec	8,192 word / 0.5 spin	= 16,384 bps
1.5 kbps	16 steps × 4 mass	8 × 8	13 msec	4,096 word / 0.5 spin	= 8,192 bps
768 bps	16 steps × 4 mass	8 × 4	13 msec	2,048 word / 0.5 spin	= 4,092 bps
384 bps	16 steps × 4 mass	8 × 2	13 msec	1,024 word / 0.5 spin	= 2,048 bps
192 bps	16 steps × 6 mass (4)	4 × 2	26 msec	768 word / 1 spin (0.5)	= 768 bps (512)
96 bps	16 steps × 6 mass (4)	4 × 2	26 msec	768 word / 2 spin (1)	= 384 bps (256)
< 48 bps	same as mode-A				

* Inside () is the version at 980430, which is to be replaced to the planed format without ()

After the integration based of the various, the final maximum resolution of IMI for given telemetry becomes as follows.

Telemetry				**Maximum Resolution**				
Total S/C		**IMI**		**temporal** (spin/3D)	**azimuth** (#sec/360°)	**elevation** (#sec/180°)	**mass** (#channel)	**energy** (#channel)
64	kbps	12	kbps	1/2	16	8	32	32
32-64	kbps	6	kbps	1/2	16	8	32	32
16-32	kbps	3	kbps	1/2	16	8	32	32
8-16	kbps	1.5	kbps	1/2	8	8	32	32
4-8	kbps	768	bps	1/2	8	4	32	32
2-4	kbps	384	bps	1/2	8	2	32	32
1-2	bps	192	bps	1	4	2	32	32
512	bps	96	bps	2	4	2	32	32
256	bps	48	bps	4	2	-	32	32
256	bps	24	bps	8	2	-	32	32
64	bps	12	bps	16	2	-	16	16
64	bps	6	bps	32	2	-	3	-

2.6.7. Command / Telemetry cf. SIB list version 980410.

2.6.7.1. IMI DC commands

code	danger?	DC name	function
01	K	CPU_ON	Turn on CPU
02	K	CPU_OFF	Turn off CPU
30		HVALL_OFF	"Ref. level B1/B2,Acc,Dfl all Off (=0)"
31		HVALL_ON	"Ref. level B1/B2,Acc,Dfl all On(=Set)"
32		BREF_OFF	B1/B2 ref. level Off
33		BREF_ON	B1/B2 ref. level On
34		PAREF_OFF	Acceleration ref. level Off
35		PAREF_ON	Acceleration ref. level On
36		DFREF_OFF	Deflection HV ref. level Off
37		DFREF_ON	Deflection HV ref. level On
39		HV_PWR_LOW	Set low HV power mode.
3A		HV_PWR_NRML	Set normal HV power mode.
40		D_TYPE_CF8	Set compressed 8-bit float output (Default)
41		D_TYPE_CB8	Set compressed 8-bit LSB output.
42		D_TYPE_UF8	Set uncompressed 8-bit float output.
43		D_TYPE_UB8	Set uncompressed 8-bit LSB output.
44		D_TYPE_WRD	Set uncompressed 16-bit WORD output.
45		DFLTYPE_STEP	Set normal dfl.HV stepping mode.
46		DFLTYPE_DFFIX	Set fixed E-level defelction mode.
47		DFLTYPE_DFSET	Set fixed DA deflection mode.
4A	N	DEBUG	Restart under the debugger (via serial link).Ground only.
4B		IMAGER	Set real imager address.
4E	K	E_FIFO	Empty TM Fifo.
4F		SYNC_DIR	Reverse next cmd. synced/direct
50		SIM_SPIN_OFF	Forced simulated spin Off (Default)
51		SIM_SPIN_ON	Forced simulated spin On
52		FIFO_CONNECT	connect = data goes to Fifo
53		FIFO_SLEEP	disconect = no data (Default)
54		SMODE_OFF	S/C mode switch Off
55		SMODE_ON	S/C mode switch On (Default)
56		AMODE_OFF	Automatic mode switch Off
57		AMODE_ON	Automatic mode switch On (Default)
58		ALT_PA_OFF	Alternating Post.acc Off (Default)
59		ALT_PA_ON	Alternating Post.acc On
5A		ENGY_FULL	Select Energy table 0 (0.01 - 35 keV)
5B		ENGY_SW	Select Energy table 1 (0.1 - 10 keV)
5E		T_IGNORE	keep same HV ref-value regardless of Temp.
5F		T_ADJUST	adjust HV ref-value for different Temp.
76		EXECUTE	"Execute programming of ""75-blocks""."
77	K	ABORT	"Abort""75-blocks"" sequence."
80		HV_OFF	HV main Off and Disable
81	K	HV_ON	HV main On
82		HV_ENA	HV main switching enable
83		B1_ON	HV bias 1 On (Mutually excl. with B2 On)
8C		B2_ON	HV bias 2 On (Mutually excl. with B1 On)
8B		B1_OFF	HV bias 1 Off
84		B2_OFF	HV bias 2 Off

code	danger?	DC name	function
85	K	RESET	Hardware reset the CPU
90	K	MODE_IDLE	A low power none output mode.
91		MODE_CAL1	Calibration 1 mode. (Special)
92		MODE_CAL2	Calibration 2 mode. (Special)
93		MODE_TEST	Test mode (commissioning/bench/reprogramming, Special)
94		MODE_A12K	Main group A (Group/index) bit rates.
95		MODE_A6K	Main group A (Group/index) bit rates.
96		MODE_A3K	Main group A (Group/index) bit rates.
97		MODE_A1.5K	Main group A (Group/index) bit rates.
98		MODE_A768	Main group A (Group/index) bit rates.
99		MODE_A384	Main group A (Group/index) bit rates.
9A		MODE_A192	Main group A (Group/index) bit rates.
9B		MODE_A96	Main group A (Group/index) bit rates.
9C		MODE_A48	Main group A (Group/index) bit rates.
9D		MODE_A24	Main group A (Group/index) bit rates.
9E		MODE_A12	Main group A (Group/index) bit rates.
9F		MODE_A6	Main group A (Group/index) bit rates.
A0		MODE_B12K	Main group B (Group/index) bit rates.
A1		MODE_B6K	Main group B (Group/index) bit rates.
A2		MODE_B3K	Main group B (Group/index) bit rates.
A3		MODE_B1.5K	Main group B (Group/index) bit rates.
A4		MODE_B768	Main group B (Group/index) bit rates.
A5		MODE_B384	Main group B (Group/index) bit rates.
A6		MODE_B192	Main group B (Group/index) bit rates.
A7		MODE_B96	Main group B (Group/index) bit rates.
A8		MODE_B48	Main group B (Group/index) bit rates.
A9		MODE_B24	Main group B (Group/index) bit rates.
AA		MODE_B12	Main group B (Group/index) bit rates.
AB		MODE_B6	Main group B (Group/index) bit rates.
AC		MODE_C12K	Main group C (Group/index) bit rates.
AD		MODE_C6K	Main group C (Group/index) bit rates.
AE		MODE_C3K	Main group C (Group/index) bit rates.
AF		MODE_C1.5K	Main group C (Group/index) bit rates.
B0		MODE_C768	Main group C (Group/index) bit rates.
B1		MODE_C384	Main group C (Group/index) bit rates.
B2		MODE_C192	Main group C (Group/index) bit rates.
B3		MODE_C96	Main group C (Group/index) bit rates.
B4		MODE_C48	Main group C (Group/index) bit rates.
B5		MODE_C24	Main group C (Group/index) bit rates.
B6		MODE_C12	Main group C (Group/index) bit rates.
B7		MODE_C6	Main group C (Group/index) bit rates.
B8		MODE_E12K	Main group E (Group/index) bit rates.
B9		MODE_E6K	Main group E (Group/index) bit rates.
BA		MODE_E3K	Main group E (Group/index) bit rates.
BB		MODE_E1.5K	Main group E (Group/index) bit rates.
BC		MODE_E768	Main group E (Group/index) bit rates.
BD		MODE_E384	Main group E (Group/index) bit rates.
BE		MODE_E192	Main group E (Group/index) bit rates.
BF		MODE_E96	Main group E (Group/index) bit rates.

code	danger?	DC name	function
C0		MODE_E48	Main group E (Group/index) bit rates.
C1		MODE_E24	Main group E (Group/index) bit rates.
C2		MODE_E12	Main group E (Group/index) bit rates.
C3		MODE_E6	Main group E (Group/index) bit rates.
C4		MODE_F12K	Main group F (Group/index) bit rates.
C5		MODE_F6K	Main group F (Group/index) bit rates.
C6		MODE_F3K	Main group F (Group/index) bit rates.
C7		MODE_F1.5K	Main group F (Group/index) bit rates.
C8		MODE_F768	Main group F (Group/index) bit rates.
C9		MODE_F384	Main group F (Group/index) bit rates.
CA		MODE_F192	Main group F (Group/index) bit rates.
CB		MODE_F96	Main group F (Group/index) bit rates.
CC		MODE_F48	Main group F (Group/index) bit rates.
CD		MODE_F24	Main group F (Group/index) bit rates.
CE		MODE_F12	Main group F (Group/index) bit rates.
CF		MODE_F6	Main group F (Group/index) bit rates.
D0		MODE_D12K	Main group D (Group/index) bit rates.
D1		MODE_D6K	Main group D (Group/index) bit rates.
D2		MODE_D3K	Main group D (Group/index) bit rates.
D3		MODE_D1.5K	Main group D (Group/index) bit rates.
D4		MODE_D768	Main group D (Group/index) bit rates.
D5		MODE_D384	Main group D (Group/index) bit rates.
D6		MODE_D192	Main group D (Group/index) bit rates.
D7		MODE_D96	Main group D (Group/index) bit rates.
D8		MODE_D48	Main group D (Group/index) bit rates.
D9		MODE_D24	Main group D (Group/index) bit rates.
DA		MODE_D12	Main group D (Group/index) bit rates.
DB		MODE_D6	Main group D (Group/index) bit rates.
DC		MODE_DUMP_R	Dump code memory RAM. (Special)
DD		MODE_DUMP_E	Dump code memory EEPROM.(Special)
DE		MODE_DUMP_P	Dump code memory PROM.(Special)
E0		SEL_M3_0	Select Mass-Table = Default (for 3 masses)
E1		SEL_M3_1	Select Mass-Table = ver. 1 (for 3 masses)
E2		SEL_M3_2	Select Mass-Table = ver. 2 (for 3 masses)
E4		SEL_M4_0	Select Mass-Table = Default (for 4 masses)
E5		SEL_M4_1	Select Mass-Table = ver. 1 (for 4 masses)
E6		SEL_M4_2	Select Mass-Table = ver. 2 (for 4 masses)
E8		SEL_M8_0	Select Mass-Table = Default (for 8 masses)
E9		SEL_M8_1	Select Mass-Table = ver. 1 (for 8 masses)
EA		SEL_M8_2	Select Mass-Table = ver. 2 (for 8 masses)
F0		MODE_A	Set group A
F1		MODE_B	Set group B
F2		MODE_C	Set group C
F3		MODE_E	Set group E
F4		MODE_F	Set group F
F5		MODE_D	Set group D
FE		DC_DMY_CMD	PIM CHECK COMMAND

2.6.7.2. IMI BC commands

code	danger?	BC name	style	size	specifier	parameter
3B	K	BSET	F	1	0	1
3C		P4KV	F	1	0	1
3D		P400V	F	1	0	1
3E		DFFIX	F	1	0	1
3F		DFSET	F	2	0	2
4C		SETP	F	3	2=C0DE	1
4D		SETHEX	F	4	2=C0DE	2
60		NOISE	F	1	0	1
61		FMIN	F	2	0	2
62		FMAX	F	2	0	2
63		FFRC	F	2	0	2
64		FCLR	F	2	0	2
65		SPDCH	F	1	0	1
66		DMPL	F	2	0	2
67		DMPH	F	2	0	2
6D		CALNR	F	1	0	1
6E	K	SPIN	F	2	0	2
6F	K	FSPIN	F	2	0	2
70	K	DC70_FEED	F	2	2=FEED	0
70	K	DC70_FACE	F	2	2=FACE	0
70	K	DC70_BADA	F	2	2=BADA	0
70	K	DC70_CAFE	F	2	2=CAFE	0
70	K	DC70_D0FF	F	2	2=D0FF	0
71		WRD_TO_RAM	F	4	0	4
72	K	WRD_TO_PROM	F	4	0	4
73		BLK_TO_RAM	V	132	0	132
74	K	BLK_TO_PROM	V	132	0	132
75		N_BLK_TO_PROM	V	132	0	132
78		RMK_INT_MSK	F	4	2=EC0E	2
79		PRGTST_FACE	F	2	2=FACE	0
79		PRGTST_CAFE	F	2	2=CAFE	0
FD		BC_DMY_CMD	V	12	0	12

2.6.7.3. IMI bi-level status

adress	word: bit	TLM name (content)	(1)	(0)
F800	119: 0	CPU_POWER (CPU power)	on:G	off:R/B
F800	119: 1	SIM_SPIN (simulated spin)	on:G	off:B
F800	119: 2-3	REASON_RESET (Reason for reset)	(00) normal-on:B (10) machin-error:Y	(01) watch-dog:Y (11) s/c-CMD:Y
F800	119: 4	HV_BIAS2_SW (Bias-2 SW)	on:G	off:B
F800	119: 5	HV_BIAS1_SW (Bias-1 SW)	on:G	off:B
F800	119: 6	HV_MAIN_SW (HV main SW !!!)	on:G/R	off:B
F800	119: 7	HV_MAIN_ENA (HV main SW !!!)	enable:G/Y	disable:B
F801	120: 0-1	REASON_MODECHNG (Reason for mode change)	(00) default:B	(01) auto:G
F801	120: 1	REASON_MODECHNG	(10) S/C:Y	(11) CMD:G
F801	120: 2	SC_MODE_CHANGE (Mode change by S/C)	enable:G	disable:B
F801	120: 3	AUTO_MODE_CHNG (Auto mode change)	enable:G	disable:B
F801	120: 4	INVALID_ERR_CMD	yes:Y	no:B
F801	120: 5	BIAS_12_REF_SW (Bias SW, 1 or 2)	on:G	off:B
F801	120: 6	POSTACC_REF_SW (Postacceleration SW)	on:G	off:B
F801	120: 7	DEFL_HV_REF_SW (Deflection SW)	on:G	off:B
F8F9	414: 0	FIFO_CONECTION	sleep:B/R (no data)	work:Y/G (data flow)

2.6.7.4 IMI analogue status

address	word: bit	TLM name (content)	unit	on-range (nominal)	conv.	measure range
F8F0	405: 0-7	OFF_TEMP (temp. at CPU=off)	C	-50 to 50 (-45 to 45)	-273 + 1.994 x	-273 to 235
F8F1	406: 0-7	BIAS_1_HV (Bias-1 HV monitor)	kV	0 to 4.7 (3.5 to 4.7)	0 + 0.02 x	0 to 5.0
F8F2	407: 0-7	BIAS_2_HV (Bias-2 HV monitor)	kV	0 to 4.7 (3.5 to 4.7)	0 + 0.02 x	0 to 5.0
F8F3	408: 0-7	POST_ACC_HV (Post-acc. HV monitor)	kV	0 to 4.2 (0 to 3.5)	0 + 0.02 x	0 to 5.0
F8F4	409: 0-7	DEF_HV (Deflection HV monitor)	kV	0 to 4.0 (0 to 4.0)	0 + 0.02 x	0 to 5.0
F8F5	410: 0-7	TEMP_1 (E-box temperature)	C	-50 to 55 (-20 to 45)	-50 + 0.814 x	-50 to 157
F8F6	411: 0-7	TEMP_2 (Sensor temperature)	C	-50 to 70 (-20 to 60)	-50 + 0.814 x	-50 to 157
F8F7	412: 0-7	+28I_CURRENT (BUS current)	mA	0 to 450 (200 to 400)	-14 + 2.8 x	-14 to 700
F8F8	413: 0-7	INT_WATCH (Internal watch)				0 to FF
F8F9	414: 1-7	DATA_RDCTN_MODE (Data reduction mode)				0 to 127
F8FA	415: 0-7	CMD_DC_COUNTER (CMD counter / DC)				0 to 255
F8FB	416: 0-7	LAST_CMD_DC (Last CMD #)				0 to FF
F802	121: 0-7	FIFO_FILLING (usuage of FIFO)				0 to FF

2.6.8. Appendix

2.6.8.1. Telemetry

total telemetry		**IMI telemetry**		**IMI packet**	
64	kbps	12	kbps	= 3 packet / sec	
32-64	**kbps**	**6**	**kbps**	**= 3 packet / 2 sec**	
16-32	kbps	3	kbps	= 3 packet / 4 sec	
8-16	kbps	1.5	kbps	= 3 packet / 8 sec	(≈ 3 packet / 1 spin)
4-8	kbps	768	bps	= 3 packet / 16 sec	(≈ 3 packet / 2 spin)
2-4	kbps	384	bps	= 3 packet / 32 sec	(≈ 3 packet / 4 spin)
1-2	bps	192	bps	≈ 3 packet / 1 min	(≈ 3 packet / 8 spin)
512	**bps**	**96**	**bps**	**≈ 3 packet / 2 min**	(≈ 3 packet / 16 spin)
256	bps	48	bps	≈ 3 packet / 4 min	(≈ 3 packet / 32 spin)
256	bps	24	bps	≈ 3 packet / 8 min	(≈ 3 packet / 64 spin)
64	bps	12	bps	≈ 3 packet / 17 min	(≈ 3 packet / 128 spin)
64	bps	6	bps	≈ 3 packet / 34 min	(≈ 3 packet / 256 spin)

2.6.8.2. Energy Table (at 20 °C)

k-factor = 8.47
eV = k * (defl - C)

where C=27.2 (v.1), 36.2 (v.2), 31.2 (v.3)

Nominal mode			
step	defl-set	(hex)	eV
-2	0	0	
-1	0	0	
0	21	15	
1	31	1f	8
2	33	21	16
3	34	22	24
4	35	23	32
5	36	24	40
6	37	25	48
7	38	26	57
8	40	28	75
9	43	2b	100
10	46	2e	125
11	50	32	159
12	55	37	202
13	62	3e	261
14	72	48	346
15	84	54	447
16	101	65	591
17	122	7a	769
18	150	96	1006
19	187	bb	1320
20	236	ec	1735
21	300	12c	2277
22	383	17f	2980
23	493	1ed	3911
24	637	27d	5131
25	826	33a	6732
26	1075	433	8841
27	1400	578	11594
28	1827	723	15210
29	2387	953	19954
30	3124	c34	26196
31	4089	ff9	34370

Solar Wind mode			
step	defl-set	(hex)	eV
0	0	0	
0	0	0	
0	30	1e	
1	43	2b	100
2	45	2d	117
3	47	2f	134
4	50	32	159
5	53	35	185
6	57	39	219
7	61	3d	252
8	66	42	295
9	72	48	346
10	78	4e	396
11	86	56	464
12	95	5f	540
13	106	6a	634
14	118	76	735
15	133	85	862
16	149	95	998
17	169	a9	1167
18	192	c0	1362
19	218	da	1582
20	249	f9	1845
21	286	11e	2158
22	328	148	2514
23	377	179	2929
24	434	1b2	3412
25	501	1f5	3979
26	579	243	4640
27	670	29e	5411
28	776	308	6308
29	900	384	7359
30	1044	414	8578
31	1212	4bc	10001

note) Temperature adjustment to keep the same voltage is:
-1 / +7 degree of T1 (electric box)

2.6.9. Figures

Figure 1. Real-sized configuration of IMI-S (sensor part). Particle trajectory with 0 degree incident angle is drawn with dashed lines. The incident particles are bent 90 degree along the half-spheric electrostatic analyzer (deflection voltage at the inner spheres and -12 V at the outer spheres). The outer surface is grounded and is isolated by the capton tapes from the -12 V outer sphere. Then it is accelerated by the post-acceleration voltage (0 or 2.3 kV) before it enters to the magnetic mass-analyzer where heavy particles goes straight whereas light particles are bent toward the inner part. Then it hits the MCP which is biased at around 2.5 kV).

Figure 2. Functional block diagram of the entire IMI instrument (IMI-S + IMI-E). The top-hat surface facing toward space is set at ground (spacecraft) potential.

Figure 3. Installation of IMI on board Planet-B spacecraft.

Figure 4. IMI sector position in terms of the space craft and its spin.

Figure 5. Measured mass resolution of IMI.

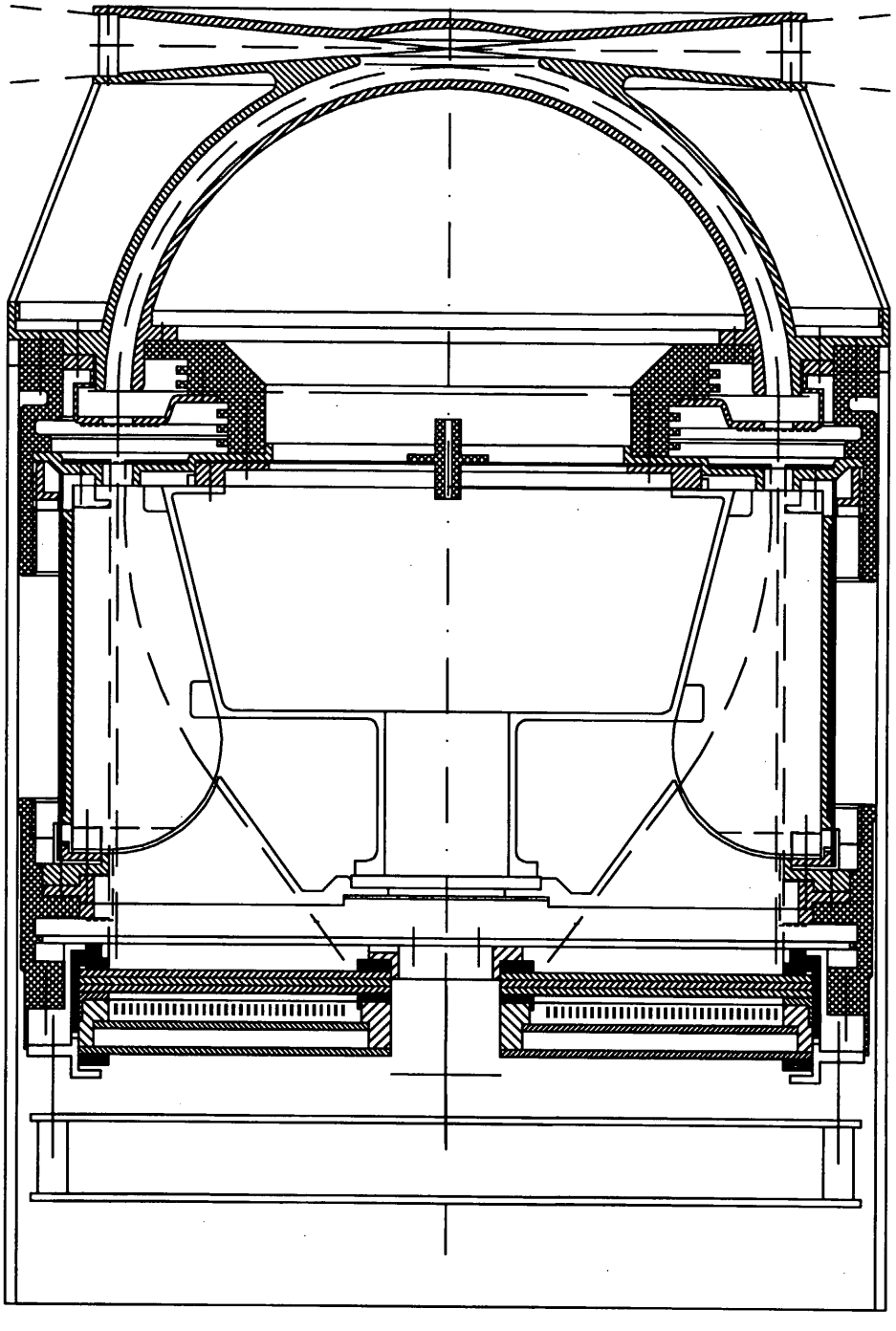

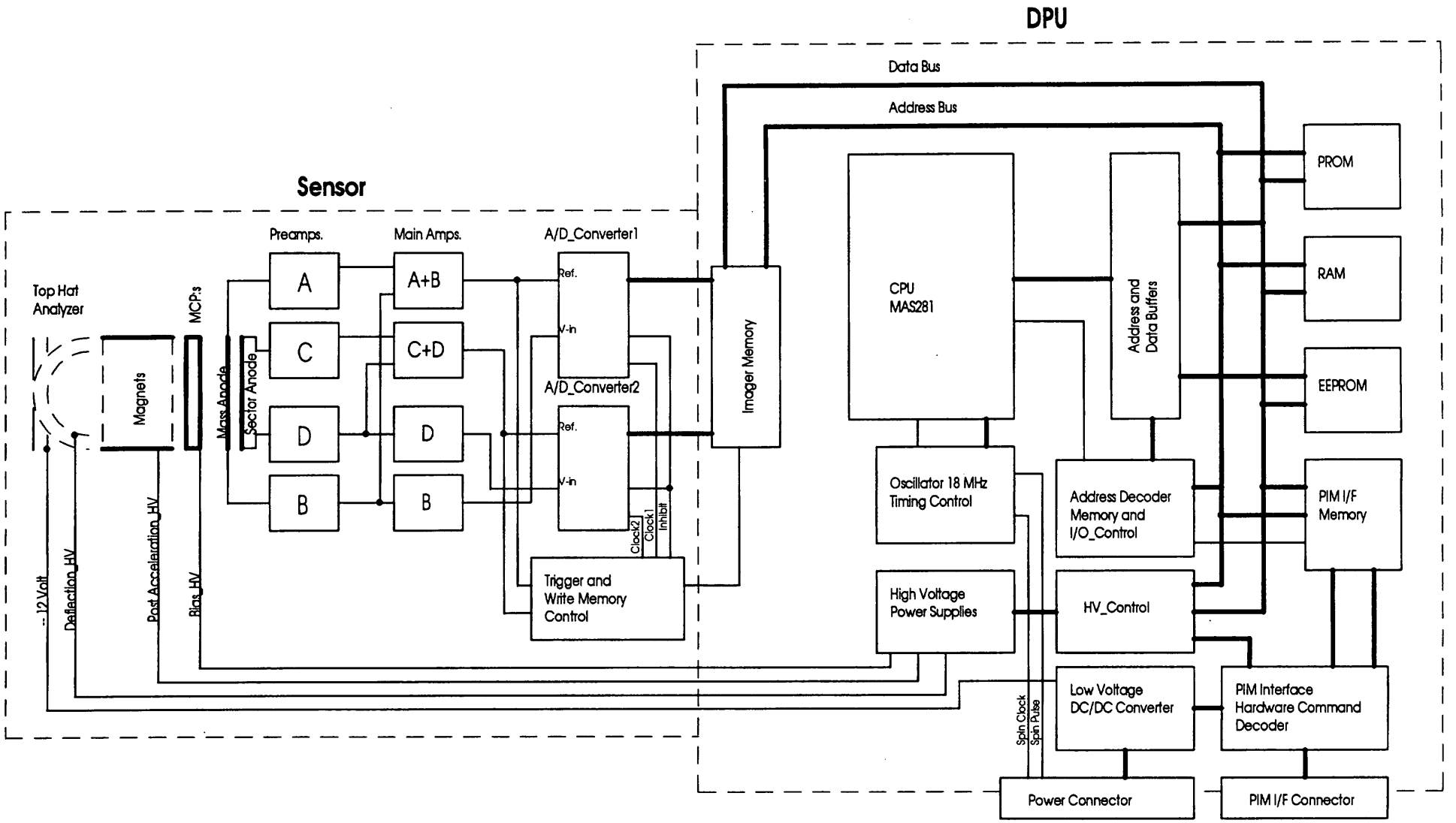
DPU
Data Bus
Address Bus
Sensor
Preamps.
Main Amps.
A/D_Converter1
A/D_Converter2
Top Hat Analyzer
MCP:s
Magnets
Mass Anode
Sector Anode
A
C
D
B
A+B
C+D
D
B
Ref.
V-in
Ref.
V-in
Clock2
Clock1
Inhibit
Trigger and Write Memory Control
Imager Memory
CPU MAS281
Address and Data Buffers
PROM
RAM
EEPROM
PIM I/F Memory
Oscillator 18 MHz Timing Control
Address Decoder Memory and I/O_Control
High Voltage Power Supplies
HV_Control
Low Voltage DC/DC Converter
PIM Interface Hardware Command Decoder
Spin Clock
Spin Pulse
Power Connector
PIM I/F Connector
-12 Volt
Deflection_HV
Post Acceleration_HV
Bias_HV

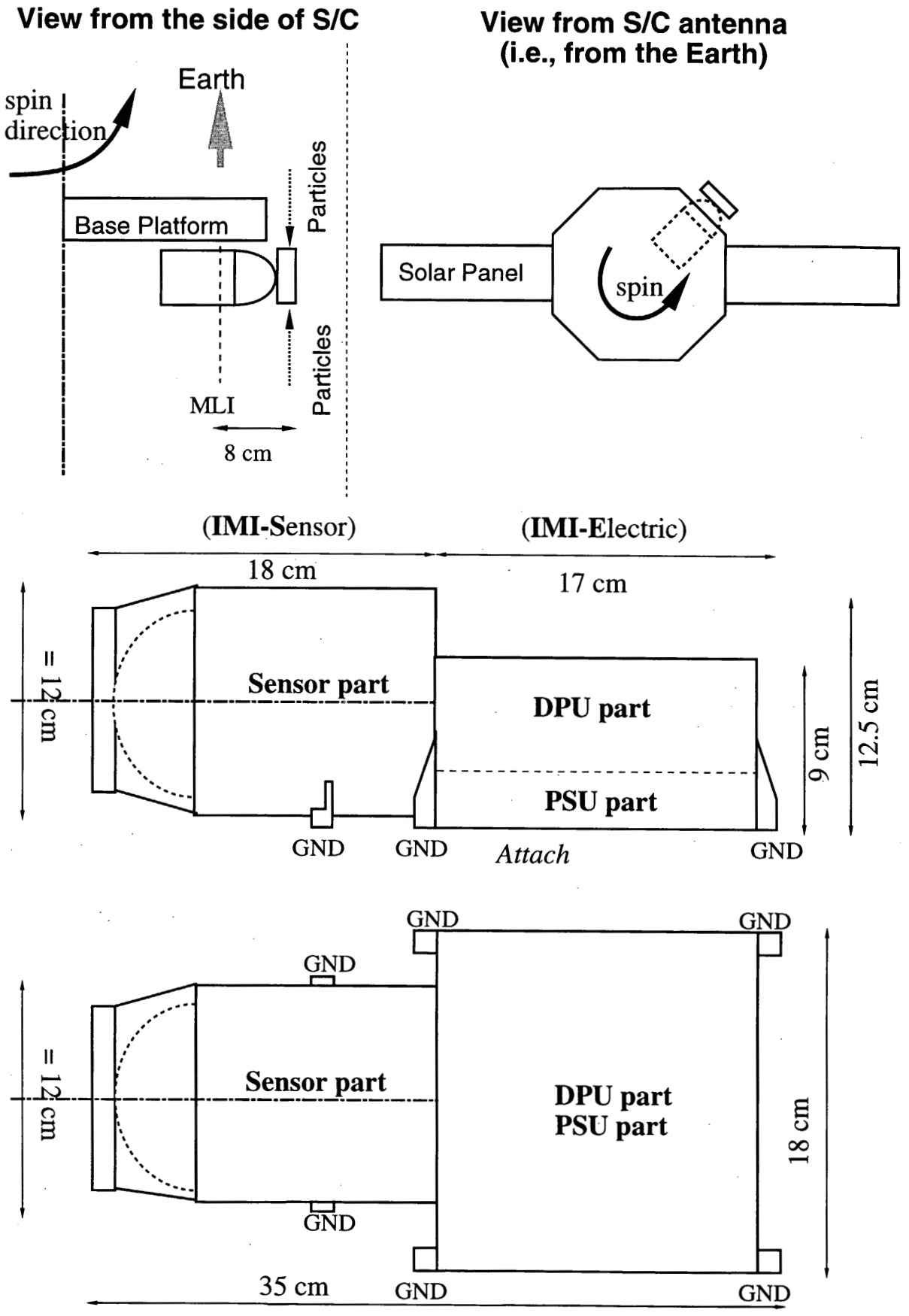
View from the side of S/C
View from S/C antenna
(i.e., from the Earth)
Earth
spin
direction
Base Platform
Particles
Particles
MLI
8 cm
Solar Panel
spin
(IMI-Sensor)
(IMI-Electric)
18 cm
17 cm
= 12 cm
Sensor part
DPU part
PSU part
9 cm
12.5 cm
GND
GND
Attach
GND
GND
GND
GND
= 12 cm
Sensor part
DPU part
PSU part
18 cm
GND
35 cm
GND
GND

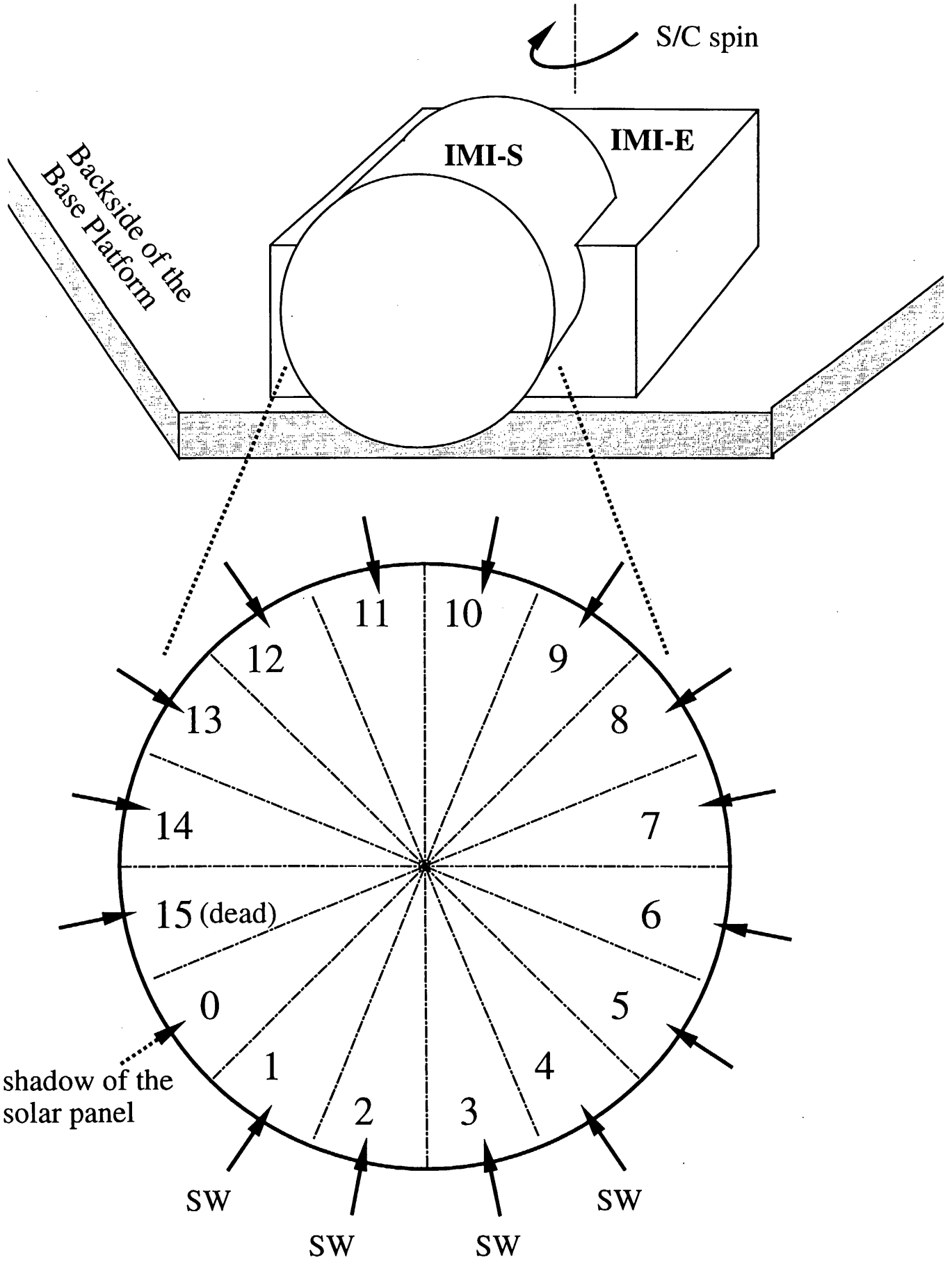

particle incident directions and the corresponding sector numbers of the electronic detection system.

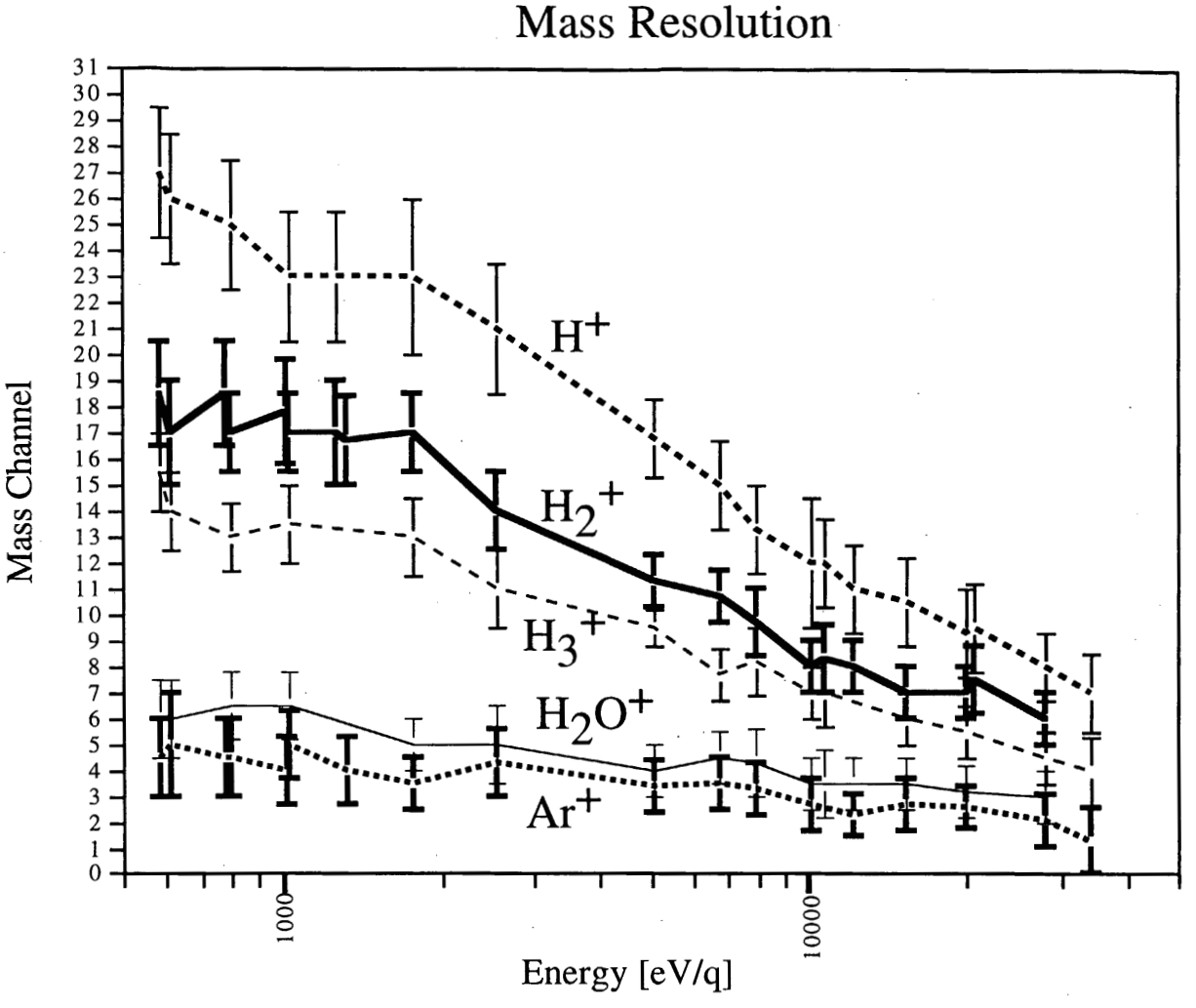

Figure 5. Calibration result of the mass resolution of IMI instrument using a 2.3 kV pre-acceleration voltage (the setting used in all modes except mode D). The total error (error bar in the figure) on the comes from uncertainty of the mass channel for individual sector (out of 16 azimuthal sector), shift of center channel for different MCP bias values, and mostly from the sector anomaly of the MCP; i.e., center channel of some sectors are off from that of other sectors by 2 channels. Although we may distinguish mass 20 and mass 40 for individual sector, it is difficult to distinguish them after we process the data because we integrate different sectors. If the particle come from only s limited direction, it may be possible to distinguish mass 40 and mass 20 according g to this result.

2.7 Mars Dust Counter (MDC)

Principal Investigator:	Eduard Igenbergs	LRT, TU-München, D
	Sho Sasaki	University of Tokyo, JP
Co-Investigator:	Georg Färber	LPR, TU-München, D
	Akira Fujiwara	ISAS, Sagamihara, JP
	Albrecht Glasmachers	LFM, GH Wuppertal, D
	Eberhard Grün	MPI-K, Heidelberg, D
	Heinrich Iglseder	STMS, Remscheid/Lennep, D
	Tadashi Mukai	Kobe University, JP
	Ken-ichi Nogami	Dokkyo U. School of Medicines, JP
	Hideo Ohashi	Tokyo University of Fisheries, JP
	Gerhard Schwehm	SSD, ESA/ESTEC, NL
	Håkan Svedhem	SSD, ESA/ESTEC, NL
	Kazuo Yamakoshi†	ICRR, University of Tokyo, JP
Principal-Engineer:	Ralf Münzenmayer	LRT, TU-München, D
Engineering:	Franz Fischer	LPR, TU-München, D
	Dieter Klinge	SSD, ESA/ESTEC, NL
	Hideaki Miyamoto	University of Tokyo, JP
	Walter Naumann	LRT, TU-München, D

2.7.1 Observation Objectives

An investigation is proposed to find dust particle ring/torus around Mars and to improve the knowledge of interplanetary dust. The ring particles would be secondary ejecta originated from (micro)meteorite bombardments on Phobos and Deimos surface. Possibly there are also some particles from upward transfer (through the atmosphere) of the dust from the Martian dust storms. The investigation will be performed using a dust detector which measures mass, speed and additionally charge of individual dust particles. The proposed instrument MDC (Mars Dust Counter) is an improved version of the MDC (Munich Dust Counter) flown on the Japanese HITEN (MUSES-A) satellite and on the German BREM-SAT. It is a multi-coincidence detector measuring particles with masses between 10^{-15} and more than 10^{-7}g and velocities between 1 and more than 70km/s. From this investigation it is expected to get highly reliable and quantitative data on interplanetary dust and dust around Mars and its satellites.

† Deceased

The scientific objectives of the MDC are related to the three phases of the PLANET-B mission:

1. Parking Phase (5 months): The first phase is similar to the orbit of HITEN spacecraft which spent 3 years in the vicinity of the Earth and moon. This provides a possibility to compare the new dust measurement with the old MDC data.
2. Cruising Phase (10 months): During the cruising phase, the MDC can measure the interplanetary dust flux as well as dust of interstellar origin. There is a possibility to compare the data with those of the dust experiments of the Galileo, Ulysses, and Cassini missions. Obtained interplanetary dust flux data will be compared with proposed zodiacal cloud models.
3. Martian Phase (2 years): Impacts of meteoroids on the surface of Phobos and Deimos generate ejecta particles, some of which escape from the satellites and would form dust particle ring/torus around Mars. MDC-PLANET-B will clarify the existence of dust ring/torus around Mars. Moreover, the MDC will continue measuring interplanetary and interstellar dust flux, which would contribute the source of ring dust through bombardments on the satellites.

Dust in the vicinity of Earth and Moon:
During the Parking Phase of the PLANET-B spacecraft in a highly eccentric orbit around the Earth with a couple of the moon fly-bys. Thus MDC-PLANET-B can extend the measurements of MDC-HITEN, whose measurement was confined within the ecliptic plane. The detectable particles may involve interplanetary dust from asteroids and comets, beta meteoroids, interstellar dust, circumterrestrial particles including space debris, and particles of lunar origin. The first analysis of MDC-HITEN data proved the existence of pro- and retrograde beta meteoroids and gave evidence for particles with high inclinations. Since the spin axis of PLANET-B will be in the ecliptic plane, the field-of-view of MDC-PLANET-B will now scan also the northern and southern hemispheres. This allows MDC to determine the three dimensional-angular distribution of cosmic dust particles.

The cumulative particle flux with mass greater than 10^{-13} g measured by MDC-HITEN is higher than the interplanetary dust flux model of Grün et al. (1985). This is in agreement with other data from spacecrafts around the Earth, for example with measurements of HEOS-2. Recently Dermott et al. (1994) advocated that asteroidal dust particles larger than 5 micron should be rocked by orbital resonance with the Earth. They may form a circumsolar ring (enhancement of dust particles along the Earth orbit) which could explain the higher dust flux measured with MDC-HITEN. MDC-PLANET-B with its good mass and velocity resolution can investigate the number of large particles and make sure (or withdraw) this hypothesis.

Measurements of HEOS-2 dust experiment showed that the dust flux near the Earth is very inhomogeneous. Fechtig (1978) divided the impact events in three categories depending on the time differences between subsequent events: swarm-, group- and

random-particles. MDC-HITEN measured also enormous variations of the impact rates close to the Earth. Fechtig et al. (1976) showed that there is evidence for near-Earth-fragmentation and described possible break-up mechanisms, but the origin of this swarms is still not proved. The new MDC can help solving this problem.

Interplanetary dust:
Interplanetary dust particles are supplied by asteroids and comets; they take Keplerian orbits and their orbital radii gradually decrease owing to the Poynting-Robertson effect. Recently contribution from Edgeworth-Kuiper belt objects is also advocated as a plausible dust source in the solar system. During the cruising phase from the Earth to Mars, the interplanetary dust flux can be measured from 1 to 1.5 AU. This new data of the interplanetary flux of dust particles could be correlated with MDC-HITEN and dust data of Galileo and Ulysses missions. Cassini spacecraft will go through the Earth-Mars region at the same time; MDC data can be compared with Cassini Dust Analyzer data. The continuation of the beta meteoroid measurements of MDC-HITEN (Igenbergs et al. 1991) is also a significant aspect.

Interstellar particles:
Ulysses dust counter detected flow of extrasolar particles whose velocity is the same as interstellar gas media at Jovian region (Grün et al. 1993). Size of those particles (~0.4micron) are larger than typical interstellar particles (~0.1micron). Continuing Ulysses observation showed that even in the inner (~1.6AU) solar system, interstellar particles occupy some parts of detectable dust and even they are the main dust component in the off-ecliptic region. MDC-HITEN data suggested the presence of interstellar particles even around the Earth region (Svedhem et al., 1996). Interstellar particles can be discriminated from interplanetary particles by direction and velocity. Different from (nearly) Keplerian interplanetary dust, interstellar particles enter the solar system at relative velocity about 30km/s (i.e., relative velocity of the solar system and surrounding interstellar gas) (Grün et al. 1994).

Circummartian dust particles:
Faint dust rings have been observed by Voyager spacecrafts around Jupiter, Saturn, Uranus and Neptune. Small satellites are considered to supply dust particles (Colwell and Esposito 1990). Because of the small masses of the Martian moons, escape velocity from their surface is less than 20 m/s. Impact ejecta from micrometeoroid bombardments would easily escape from their surfaces. Therefore dust rings or tori are expected to exist around Phobos and Deimos orbits.

Soter (1971) first indicated the possibility of Martian dust rings of particles from its moons. Duxbury and Ocampo (1988) examined image data by Viking Orbiter 1, but they could not find a dust ring whose optical depth is greater than 3×10^{-5}. However, PHOBOS-2 ASPERA detected decrease in magnetic field and increase in plasma density at Phobos orbit (Dubinin et al. 1990). A gas torus with dust is suggested. Horanyi et al.

(1990) showed that the magnetic field due to solar wind as well as radiation pressure should change the orbit of small particles and they would not form a confined ring.

Juhasz et al. (1993) reported a estimation of the average number of dust particles accumulated around mars. Submicron sized grains (radius a< 1 micron) are perturbed by electromagnetic forces and solar radiation pressure so that they do not stay close to the Keplerian orbit of the ejecting satellite. The lifetime of these particles ranges from a few days to a few hundred days. Their trajectories are contained in an approximately spherical volume. Of larger grains, solar radiation pressure enhances orbital eccentricity of dust particles. When 1 micron < a < 7 micron, dust is lost by Mars capture, corresponding lifetime due to this perturbation ranges from a few tens of days to half a Martian year. Dust grains with a > 7 micron have relatively stable orbits forming a disk/torus around Mars, and their lifetime is determined by collision with the satellite since they stay close to its orbit. Despite the short lifetime of submicron-sized particles and the relatively large volume which contains their trajectories, their number density is comparable with that of particles whose size is larger than 7 micron. This is due to the fact that submicron-sized grains are thought to dominate the number of escaping particles. Juhasz et al. (1993) concluded that particle with sizes a < 0.5 micron and 7 micron < a < 50 micron will be the most abundant in the Martian dust environment.

Recent theoretical studies (Ishimoto et al., 1994, Hamilton, 1994, Juhasz, 1994, Sasaki, 1994) show that Martian oblateness together with solar radiation pressure should enhance the orbital eccentricity (of particles from Phobos and Deimos) and inclination (of particles from Deimos) greatly. As for particles from Phobos, eccentricity of particles smaller than 200 micron is greatly increased owing to the resonance of phase shift due to Martian oblateness. And eccentricity of particles smaller than 20 micron becomes so large that they are quickly captured by Mars. Since inclination is not largely increased, dust particles from Phobos would form thin dust ring whose thickness would be less than 300km. The eccentricity of dust particles from Deimos is also enhanced by radiation pressure, but the combined effect with Martian oblateness increase rather inclination to be as high as 0.2 to form an extended torus, which would contain smaller particles than those of Phobos' ring.

If only the secondary ejecta from interplanetary dust impacts on the satellite surfaces should contribute the circummartian dust, expected detection number of ring/torus particles would be smaller than that of interplanetary particle. However, collisions of ring particles on the satellites may produce additional dust particles, since the surfaces of Phobos and Deimos are covered with regolith and their escape velocities are as small as 10m/s. In this self-sustained case (Sasaki, 1994), expected dust number density will be much higher so that the MDC will detect Phobos' ring and Deimos' torus.

Since PLANET-B will take retrograde elliptic orbits, it will have relative velocity as high as 2km/s against Keplerian prograde particles at Phobos' orbit. As shown later in the MDC instrumentation, the minimum velocity for dust detection by impact ionization is

satisfied even for relatively slower ring particles. As MDC- PLANET-B will determine the flight direction as well as impact velocity of impacting particles, it can distinguish between (faster) interplanetary and circummartian particles during the mission phase in the orbit around the Mars.

The PLANET-B orbiter with the eccentric equatorial orbit around the mars which crosses the orbits of the satellites Phobos and Deimos provides the opportunity to detect particles directly ejected from the surface of Phobos and Deimos. Efficiency of mass ejection from satellites at meteoroid impacts is one of the important parameter that should control the dust abundance around Mars. Laboratory studies of micron and submicron ejecta particles have been conducted by Schneider (1975) and Alexander et al. (1975) using millimeter-size primary particles at approx. 4 km/s impact speed. These measurements show a very small mass ratio (10^{-4}) of high velocity ejecta particles to the primary particle. But all of the high speed ejecta are concentrated in micron and submicron mass range. It is expected that mass ratio of high velocity ejecta particles to the primary particle is significantly increased at higher impact speeds (15 - 60 km/s). New hypervelocity impact experiments by Zook et al. (1984) showed that the number of secondary impact pits is more than 2 orders of magnitude higher than was previously thought (Schneider, 1975) when oblique impacts dominate. MDC-PLANET-B can measure both the interplanetary dust flux and the number density and size distribution of dust ring particles. Comparing with theoretical estimations of orbital motions of dust, we can give constraints on dust ejection efficiency and possibly surface property of satellites.

The upward transfer process of the dust from the Martian dust storms: As the periapsis of the S/C is 150 km from the Martian surface it will be probably possible to detect dust coming from the Martian atmosphere. Carr (1990) reported that dust storms, such as the 300 km wide one found scurrying across the floor of the Argyre basin early 1977, carry micron-size particles high into Mars atmosphere. Dust storms often grow so large that they cloak the entire planet - as happened twice during 1977 as the Viking spacecraft looked on. At PLANET-B periapsis, relative velocity at dust impact is a few km/s. At TUM/LRT is a low velocity sand dust accelerator in operation. With this accelerator the MDC-PLANET-B could be calibrated in the velocity range below 1 km/s.

MDC-PLANET-B has also capability of measuring charge of dust. Concerning the loss mechanisms is very interesting to investigate the interaction of charged particles. As Mars has only very week magnetic field and then the solar wind interacts with the atmosphere. Around Mars is only a low energetic plasma like on earth. Therefore the surface potential (equilibrium potential) of small particles could be app. 1 volt. With increased sensitivity of lower noise and an additional neutral channel, the new MDC can determine the surface charge, at least of bigger particles.

2.7.2 Instrument Specifications

The experiment will detect individual particles impacting on the sensor and will measure their electrical charge, mass, impact speed and direction. The MDC is based on an impact plasma detector. Figure 1 shows how measurements are taken by the MDC.

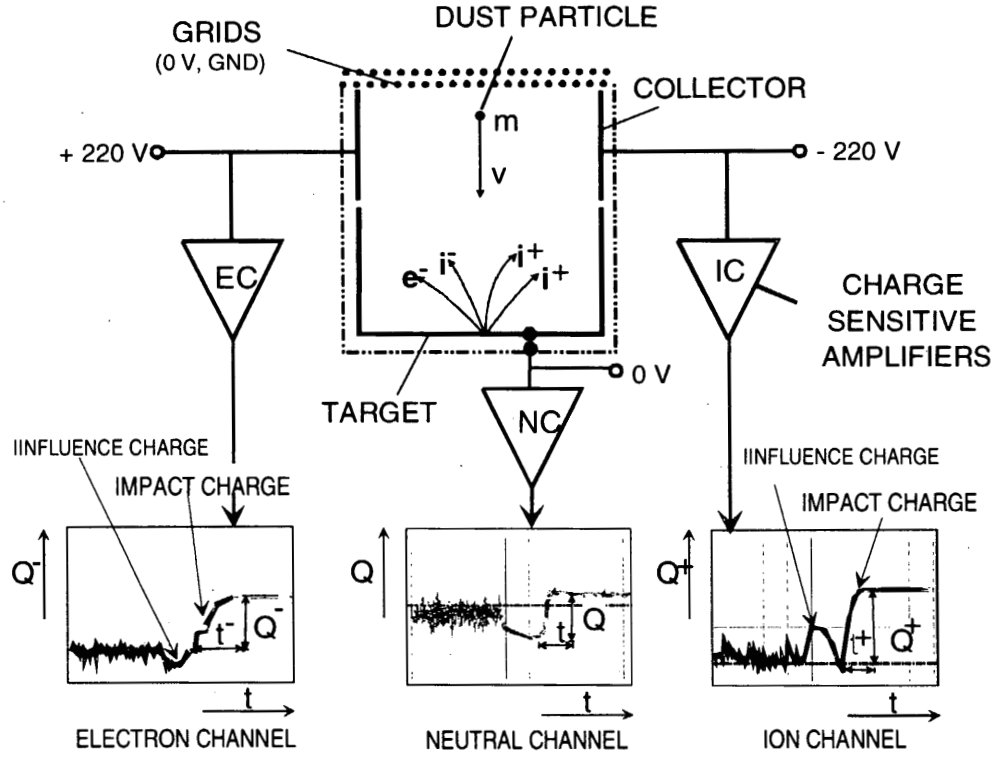

Figure 1: Measurement principle of the MDC plasma impact detector. The velocity and mass of the particles is calculated from the charge signal measured on the two electrodes and form the neutral channel connected to the target area.

Dust particles - charged or uncharged - are detected by the plasma produced during the impact on the gold surface of the sensor box. The basic set-up of the MDC consists of a target and two charge collectors which are biased by positive and negative high voltage, separating the impact plasma into positively and negatively charged components. Connected to the charge collectors and the target are charge sensitive amplifiers which convert the input charge into an output voltage. For each charge signal amplitude and risetime are evaluated. The risetime is a function of velocity and the pulse height is proportional to the mass and the speed to a constant power.

$$t = c_g \cdot v^{\eta}$$
$$\pm Q/m = c_r \cdot v^{\beta}$$

with: m particle mass; v particle velocity; Q maximum charge; t signal risetime; c_r, c_g, β, η calibration constants.

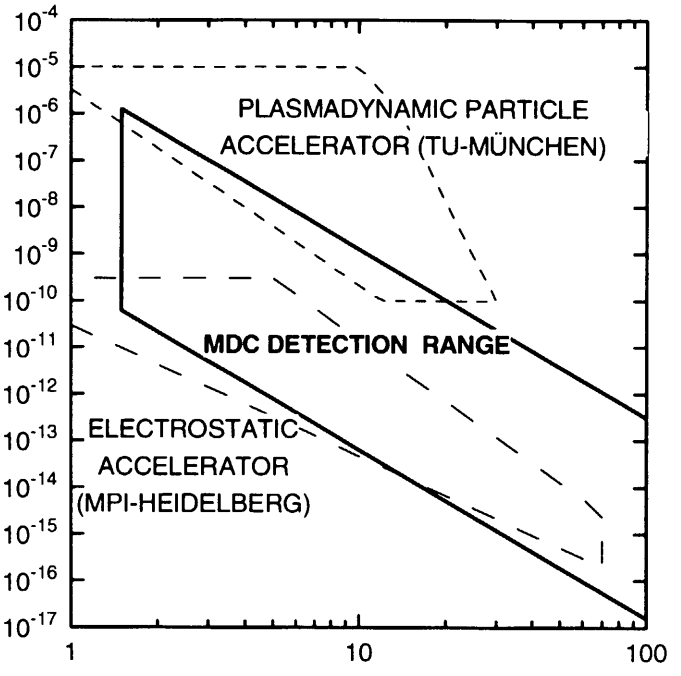

Figure 2: Sensitivity range of the MDC and capability of the accelerators which are used for calibration.

The used charge sensitive amplifiers will be capable of measuring charges in the order of $1*10^{-15}$ C to $5*10^{-11}$ C, which corresponds to a mass range of app. $2.5*10^{-15}$ g to $1.2*10^{-10}$ g or a diameter of app. 0.12 µm to 4.4 µm (with 2.7 g/cm^3) at a velocity of 10 km/s. In Figure 2 the sensitivity range of the MUSES-A MDC is displayed. The output of the amplifiers is digitised and stored by a transient recorder consisting of two 8 bit A/D converters, clocked with 2.5 or 5 MHz each and using a FIFO memory (see Figure 3). In order to minimise the error when converting four decades of input charges to 8bit data, the charge sensitive amplifiers have logarithmic response curves. A microprocessor system, 80C85 CPU with 4 Kbytes ROM and 56 Kbytes RAM, processes measured signals, controls the spacecraft interface and monitors voltages and temperatures. A switching power supply uses input between 16 and 27 V to generate a +5V output for the digital electronic, a ± 12 V output for the charge sensitive amplifiers and ± 220 V for the bias voltages of the charge collectors. The power consumption of the MDC will be between 3.4 and 3.8 Watts plus about 0.5 Watt for the PIM.

Over a measuring time of 200 µs around the impact time, the charge versus time information is recorded. The amount of data is 1024 Byte per impact. Together with the impact-charge data, calibration and housekeeping data valid for the time of impact are stored and transmitted down to the ground, giving the opportunity to inspect the real signals measured in space on the ground.

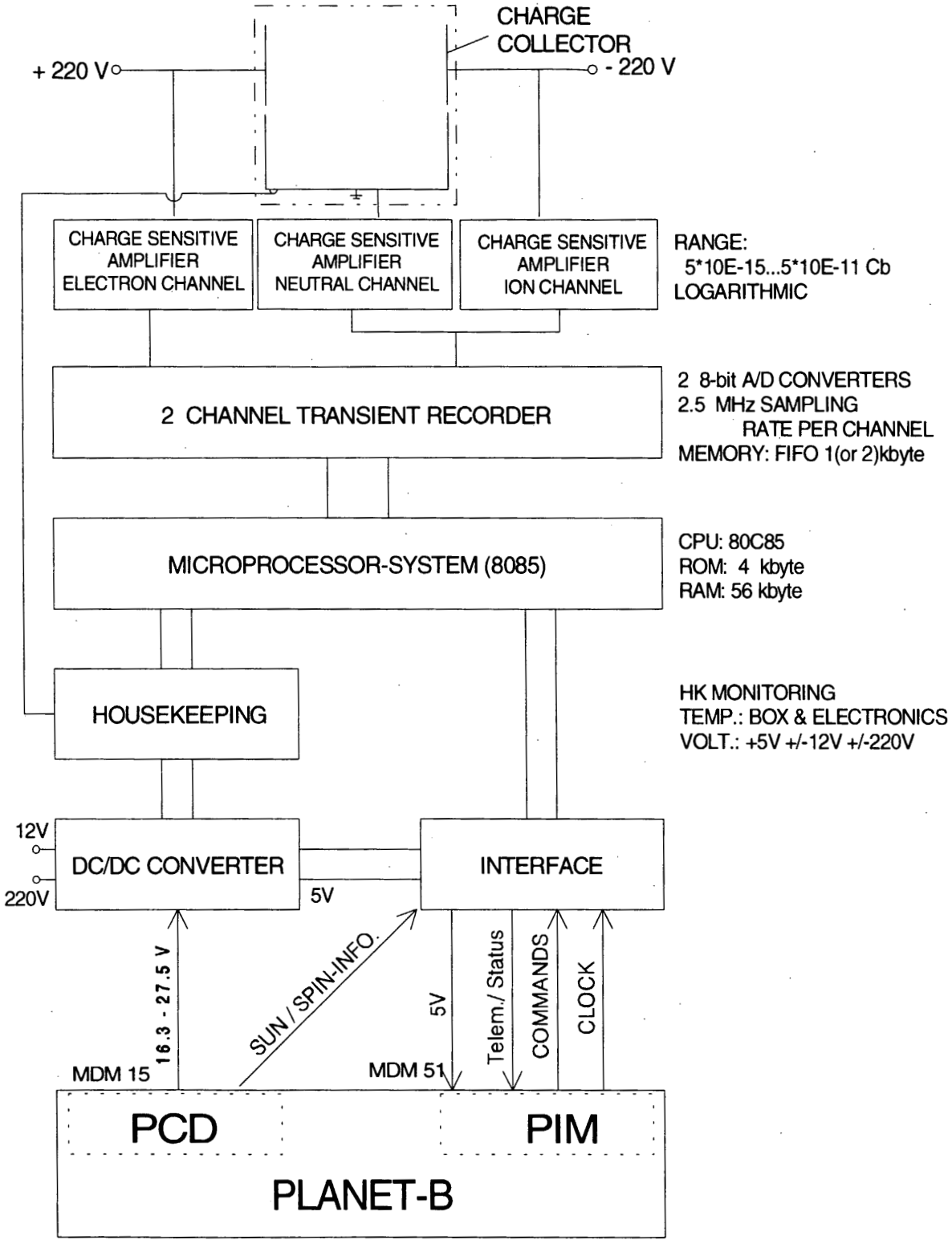

Figure 3: Functional block diagram of the Mars Dust Counter.

2.7.3 Instrument Configuration

The MDC consists of an electronic box with the electronics and a sensor box on top of the electronic box (see Figure 4). The sensor box has an opening of 116*125 mm^2 which is covered with two gold plated steel grids. The MDC will be mounted with four flanges on to the side panel of the spin stabilised S/C (see Figure 5). The sensor will scan with its field of view, which is rotated by 360° around the rotational axis. The MDC is mounted with an angle of 45° on the side panel to achieve that the centreline of the field of view of the MDC is shifted toward the rear side of the spacecraft in order to avoid sun light shining inside the sensor box. This eliminates noise signals due to photo ionization.

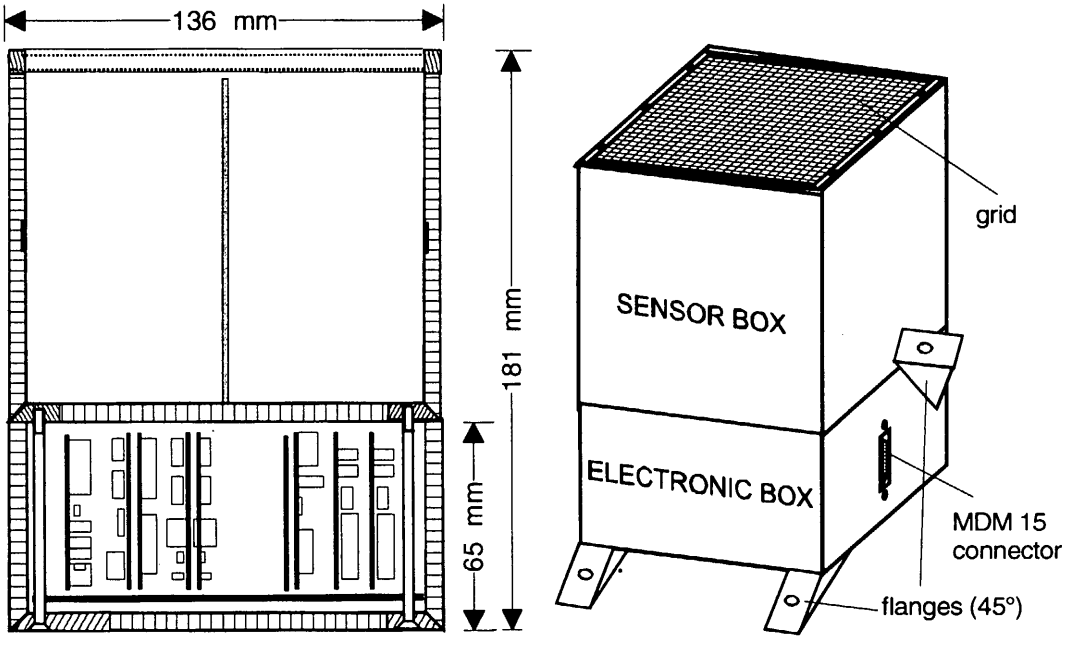

Figure 4: Outline of Mars Dust Counter mechanical design.

The MDC experiment measures the electrical charges generated by high velocity impacts of small masses on a gold surface. The setup consists of a target and two charge collector plates which are biased by negative and positive voltages. The impact plasma is separated into positive ions on the negative collector and electrons and negative ions on the positive collector. The amplifier connected to the target measures positive ions or electrons depending from the impact location.

2.7.4 Size, Weight and Power Consumption

Size of MDC (W × D × H):	126 × 135 × 181 mm^3
Weight of MDC :	0.73 kg
Power consumption (27-16 V, excluding PIM):	3.4-3.8 W

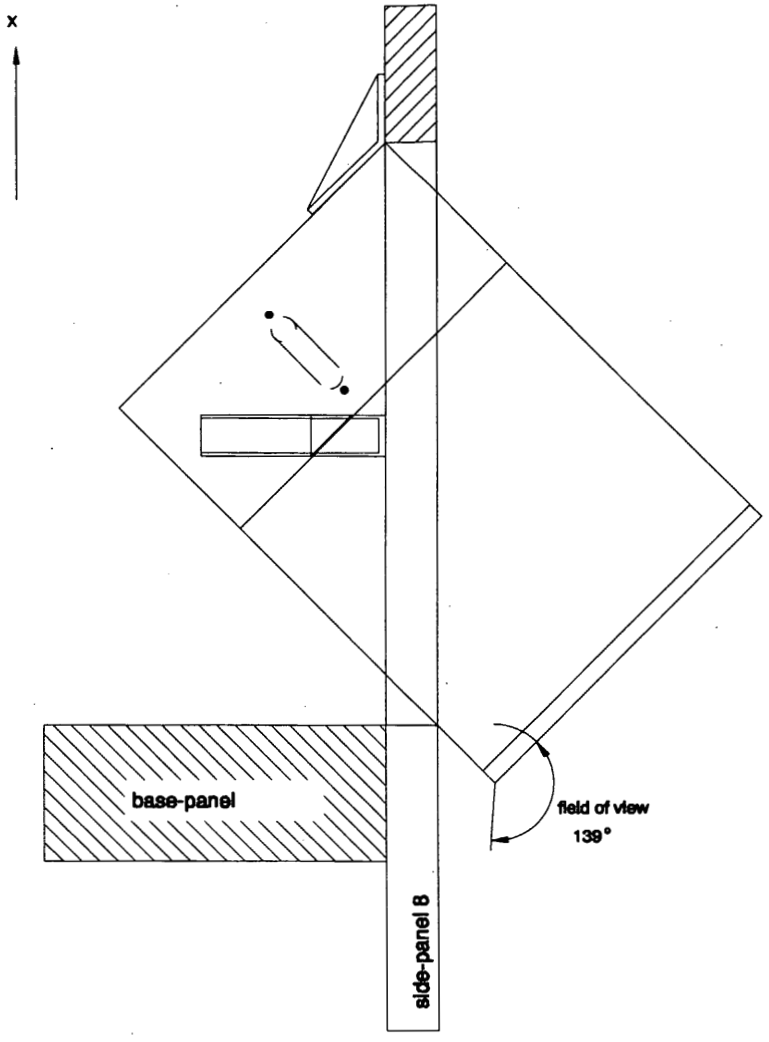

Figure 5: The MDC will be mounted with four flanges on to the side panel of the spin stabilised S/C. The sensor will scan with its field of view, which is rotated by 360° around the rotational axis.

2.7.5 Operation

The MDC is a dust detector experiment which has some charge sensitive amplifiers connected to collectors mounted inside the sensor box. The analog signals from the amplifiers are converted with A/D-converters and stored in a FIFO-memory which is filled only to the half. If the signals reach a adjustable value („Trigger Level") the FIFO will be filled completely and then the data will be transferred into the MDC-RAM and each impact signal will get a quality number in order to distinguish good impact signals from probably noise signals. Each impact signal occupies 1 *kbyte* of the RAM. As the MDC has 56 *kbyte* RAM available, up to 51 impact signals could be stored. The rest (5 *kbyte*) of the RAM is used for housekeeping, qualification of the impacts and storing variables and optionally parts of the MDC-program. When MDC memory is full new

impact signals are stored in the memory area of the already stored impact with the lowest quality number. With this routine minimum impact-signals are lost if the MDC-data could not be read out (MDC dump mode; Mode Change to format 16h) as often as necessary. During normal operation the complete MDC-RAM (56 *kbyte*) will be read during a MDC dump. If there is only a very low data-transmission rate available and the MDC-RAM is not completely filled with impact signals the start address within the MDC-RAM for starting the read out could be set to the address where the last impact signal is stored. This helps to reduce the amount of data which has to be transferred to the ground station.

The RAM is large enough to store the detected impacts of two weeks if the dust flux will not exceed the expected mean flux. But it could occur that the memory is filled up already during one day or less if the MDC measures much higher dust fluxes in the case of dust rings at orbits of the mars satellites Deimos and Phobos or due to some other special events. For this reason the data should be transmitted to the ground station if possible every day, but at least once per week.

The MDC can create a test-pulse by a function call („**TEST**") at the input of the amplifiers to approve that the amplifiers and the transient recorder works correct. The amplifiers are supplied by the „analog voltage" (±12 *V*) which is not switched. The analog voltage and the 5 *V* will be on with the power on of the MDC. The bias-voltage of the charge-collectors will be switched on by sending the discreet commands **HVENA** and **HVON** to the MDC. This means, that if the MDC is switched on and the HV (high voltage) is switched off („stand-by mode"), the complete electronics (memory, CPU, amplifiers etc.) runs and there will be no significant save of power as the power consumption of the high voltage is very low.

If the MDC is switched on or after a RESET the MDC check the status of the 56 kbyte RAM (only after the DC CLEAR the RAM is initialised with 0x00 in advance). In the uppermost free segment (1 kbyte of RAM) some variables are copied and start addresses for functions or subroutines (function table). This segment is called Variable- or HSK-segment. If there are some software changes necessary the new software part will be loaded into the MDC RAM and the corresponding addresses in the function table will be changed. The uppermost free segment starts normally with 0xFC00 but if this segment is faulty it will be at the next 1kbyte segment. If there are some changes of variables in the HSK-segment, the values had to be load not to the address 0xFCxx but to the address 0x00xx as the software has a special routine for changing variables in the HSK-segment.

During normal operation the MDC will copy some HSK-data into the dual-port RAM from where the data will be read from the PIM. This HSK data will be updated at least after each IndexPulse and after any command sent to MDC. When ModeChange command is issued with the first data byte equal 0x16 (MDC-dump mode) the MDC will put its memory content (normally starting from address 0x2000) into the dual port RAM in order to be read from the PIM. The MDC will stay in this mode until the next

ModeChange command is issued with the first data byte not equal to 0x16. The MDC is not monitoring the hardware signal "Mode Change Reference Pulse". If the memory dump is done with a very slow data rate the MDC will be able to record during the memory dump new impact signals. The impact segment which is dumped in the moment is locked with a keynumber in order to avoid to overwrite a segment which is in the moment dumped. Due to a minor error in the onboard software it is not guaranteed that the dumped segment is locked correctly. Therefore it could happen, that there are inconsistent data in one impact segment. The meaning of the different keynumbers is described in table 1.

Table 1: Meaning of the different key numbers at the beginning of each (1kbyte) segment.

Key	name	meaning
0xFF	calib_key	test impact data for calibration
0xFE	segm_faulty_key	faulty RAM
0xFD	variable_key	variable are (HSK-Segment)
0xFC	code_key	software upload
0xFB	quali_ion_key	temporarily data for ion qualification
0xFA	quali_elec_key	temporarily data for electron qualification
0xF9	quali_neut_key	temporarily data for neutral channel qualification
0xF8	im_quali_key	during qualification
0xF7	im_1st_key	during readout/consistency check
0xF6	test_key	signal from test pulse (four step pulse)
0x02 - 0xF5		quality number for recorded signals
0x01	im_new_key	new signal, not yet qualified
0x00	free_key	free segments

The MDC is not able to calculate the quality of each signal, when two impacts occur within 3 seconds. The segment with the new signal will get the quality key 0x01. If the MDC is not interrupted any more from new signals, the quality of all segments with the segment quality 0x01 will be calculated. The bilevel HK value NOISE has no meaning, the value of this bit will be always 0.

After the MDC dump (read out of the MDC RAM) all segments which contain signals will have a wrong checksum (last byte of each segment) until a new signal will be stored in this segment. For this reason it is not an error if in the ground support software a checksum error for a segment is found in the case that the quality (key number) of this segment is 0x00.

There is a Plasma Wave Sounder experiment on board PLANET-B, which could increase the measured noise of the MDC very much. In order to minimise the noise measurements of the MDC an onboard information is sent to MDC if the Plasma Wave Sounder is switched on and off,. During the operation time of the Plasma Wave Sounder (around 20 minutes during periapsis) the trigger level of the MDC could be increased and additional the trigger logic of the MDC could be disabled during the time of the pulses. To achieve this, a programmable trigger logic is implemented.

The normal operation of the MDC should look like this example:

„Power On" of MDC:

The MDC power-supply gets its power from the spacecraft and provides the MDC with 5 *V* to run the digital electronic of the MDC and ±12 *V* for the analog electronic (charge sensitive amplifier and reference voltages for A/D-converters). The MDC runs at first the **RESET** routine and provides after a few seconds valid HSK-data.

FC[1] „**CLEAR**":

The MDC-RAM will be completely rewritten and filled with the value 0 and after this the RESET routine initializes the MDC-RAM. During the handling of the **CLEAR** routine the MDC is not able to provide valid HSK-data for a few seconds.

PS[2] „**UPLOAD**":

The **UPLOAD** is only necessary if there is any change of the MDC software which have to be written into the MDC-RAM after the launch of the spacecraft.

DC[3] „**HVENA**":

The switch on of the high voltage is enabled.

DC „**HVON**":

The bias voltage for the charge collectors (±220 *V*) is switched on.

PS „**SETTRM**":

The set of the trigger mode (SETTRM) combines the setting of the trigger level with the configuration of the trigger logic.

The trigger level has to be set in order to define the signal-level at which a impact should be recorded. This trigger level has to be set in accordance with the mission phase. The best value will be determined with some tests during the in flight operation of the experiment. During the first days of MDC operation this parameter set has to be performed some times with different values in order to find the appropriate values for the optimized operation of the MDC.

The trigger logic can be changed by setting two parameters (bits): The triggering of impact signals can be disabled and enabled by setting on bit and the other parameter (bit) defines whether the triggering of the MDC will be disabled when there will be a guard pulse during the activities of the PWS or not. Additionally one bit is used for switching on or off of the multiplex mode (Ion/Neutral channel multiplexed or only Ion channel).

FC „**TEST**":

---

[1]FC: function call

[2]PS: parameter set

[3]DC: discrete command

There will be one test-pulses feed to the input of the amplifiers and recorded as normal impacts in the MDC-RAM. A few seconds after the MDC has received the FC **TEST** the impact count (HSK-value: **MDC-IMP-C**) should be increased by one. The impact count will not increase immediately if there are many noise signals processed by the MDC (Noise Count is increasing fast) or will never increase if the trigger level is to high (above 0x?E).

„MONITORING"

After the setting of the trigger level the Impact-, Event- and Noise-Count (HSK-values: **MDC-IMP-C**; **MDC-EVENT-C**; **MDC-NOISE-C**) has to be monitored. If one or more of this counts increases very rapidly (by one after some seconds) the trigger level has to be set to a higher value by PS SETTRM.

„MDC DUMP MODE"

The expected mean impact rate is not very high but the experience with the MDC experiment on the MUSES-A mission shows, that there is a very inhomogenious dust flux. More than 10 impacts within some minutes could happen. Therefore there should be as much as possible free memory for impacts in the MDC-RAM. For the normal operation the MDC dump mode should be performed if the impact count is higher than 20 (HSK value **MDC-IMP-C**>20 (=0x14)) there should be the change to the MDC dump mode. Even if the impact count do not reach 20 at least once per week the MDC dump mode should be done. During the first days of operation of the MDC and after major changes in the orbit parameter of the spacecraft the MDC dump mode should be performed more often in order to find the best parameter settings (trigger level etc.).

Before the MDC will be switched off (due to under voltage control or other reasons) the MDC dump mode should be performed.

„active plasma wave sounder experiment"

If the plasma wave sounder is activated the FC **PWSON** will be sent to the MDC. From this moment until the FC **PWSOFF** is sent to the MDC a special trigger mode is valid. This trigger mode will be set together with the normal trigger mode by the PS **SETTRM**. With this parameter set the trigger level will be set and it will be also defined whether the MDC triggering will be disabled when there is a guard pulse or not. Before and after the first operation of the plasma wave sounder in space the MDC-data should be transferred to ground (mode change FORMAT 16). After the analyzing the noise data during the operation of the plasma wave sounder the proper value of the trigger level will be sent by the PS **SETTRM** to the MDC.

2.7.6 Commands and Telemetry Items

2.7.6.1 Commands

Table 2: **Discrete Commands:**

XY (HEX)	name	function
01	RST	MDC -Hardware Reset:
22	MODE_CHANGE	Communication Mode Change:
30	FCALL	initiate Function Call Block Command:
31	PSET	initiate Parameter Set or Data Transmission Block Command:
40	HV_OFF	switch HV off: Hardware decoded: The HVOFF command switches off the high voltage (±220 V)
80	HV_ENA	enable HV switch on: Hardware decoded: The HVENA command enables the switch on of the high voltage (±220 V)
C0	HV_ON	switch HV on Hardware decoded: The HVON command switches on the high voltage (±220 V)

Block Commands:

Each Command Block starts with one DC followed by some BC (max. 254 bytes) and the „End of Command Word" (**ECW**). The first BC (**nr**) gives the number of all BC in the Command Block the second (**A**) and third BC (**A**) gives an address and the last BC consists of a Check Sum (**CS**). At the end of each Command Block follows the **ECW** byte, which gives the number of all bytes of the Command Block.



There are two different types of Block Commands:

Function Calls:



Parameter Set:



L: number of data bytes (length)
AA: Address (2 byte)
data: L data bytes
CS: Checksum: (nr+A+A+Σ data+CS) mod 256 =0
ECW: End of command word, number of all bytes excluding ECW

Table 3: **Function Calls:**

DC	nr	A	A	CS	ECW
30	03	00	02	FB	05
30	03	00	04	F9	05
30	03	00	06	F7	05
30	03	00	08	F5	05
30	03	00	0A	F3	05

name	function
CPU_RESET	software reset of MDC CPU
CLEAR_RAM	clear MDC-RAM and start software RESET proceed
TEST_PULSE	generation of test pulses for amplifier calibration. The test-pulses are stored like normal impacts in the MDC-RAM. Some seconds after the TEST command, the impact count (HSK-Value) should be increased by two.
PWSON	Plasma Wave Sounder is on. The MDC trigger mode will be changed to a mode which is valid only during the period when the PWS is on. This trigger mode will be set by a parameter set command (SETTRM).
PWSOFF	Plasma Wave Sounder is off. The standard trigger mode will be valid.

Table 4: **Parameter Set:** This is a list of some predefined parameter sets.

DC	nr	A	A	data....	CS	ECW	name	function
31	05	00	5D	?? ??	??	07	SETTRM	set Trigger Mode: Set of the trigger level (Bit 0-3) for the detection of impact signals. There will be the value for normal operation (1st data byte) and probably a higher level (2nd data byte) during phases where the PWS is switched on. Therefore there will be set two different trigger modes with in one Parameter Set. Additional the Trigger Mode enables (Bit 5=0) or disables (Bit 5=1) the triggering. Bit 4 enables the trigger disabling (Bit 4=0) of the guard pulse during activities of the PWS(if Bit 4=1 the MDC takes no care about guard pulse). Bit 7 change the multiplexmode. The MDC is in "mux-mode" (Bit 7=1; 3 channel) or not (Bit 7=0; 2 channel). (AA= V_TRIG_LPWSOFF)
				examples				
				93 94	77		SETTRM_01	
				95 96	73		SETTRM_02	
				97 98	6F		SETTRM_03	
				99 9A	6B		SETTRM_04	
				9B 9C	67		SETTRM_05	
				9D 9E	63		SETTRM_06	
				95 2F	DA		SETTRM_07	
				15 17	72		SETTRM_08	
				95 87	82		SETTRM_09	
				94 84	86		SETTRM_10	
				2F 2F	40		SETTRM_11	
				96 86	82		SETTRM_12	
				96 87	81		SETTRM_13	
31	04	00	91	00	6B	06	SETEC.	Set Event Count to 00h. (AA= V_EVENTS)
31	07	00	93	00 00 00 00	66	09	SETNC	set Noise Count to 00h. (AA= V_NOISE)

31	05	00	6E	?? ?? examples 00 20 00 80 00 C0	?? 6D 0D CD	07		SETTMAD SETTMAD_01 SETTMAD_02 SETTMAD_03	set telemetry start address in order to define the start address for the data read out of the MDC-RAM after the change to the MDC dump mode (AA= V_XMIT_START)
31	05	00	6A	60 01	30	07		CAL-TP-IC	set offset for calibration testpuls after an impact in order to record ion testpuls(AA= V_CALIB_OFFSET)
31	05	00	6A	62 01	2E	07		CAL-TP-NC	set offset for calibration testpuls after an impact in order to record neutrals testpuls (AA= V_CALIB_OFFSET)
31	04	00	6C	0E	82	06		CAL-TP-ONE	set offset for calibration testpuls after an impact in order to record only neutrals or ions testpuls (distance is data +2!) (AA= V_CALIB_DIST)
31	04	00	6C	10	80	06		CAL-TP-MIX	set distance for calibration testpuls after an impact in order to mix ion and neutrals testpuls (AA= V_CALIB_DIST)
31	0B	00	60	?? ?? ?? ?? ?? ?? ?? ?? examples	??	0D		KO-CRITERIA	set criteria for classifying signals as noise (AA= V_NOISE_BEGIN)
31	0B	00	60	E2 E2 E2 E2 50 40 50 40	ED	0D		KO- CRITERIA_01	default criteria
31	0B	00	60	D0 D0 30 30 00 00 00 00	95	0D		KO- CRITERIA_02	no noise; all signals are recorded if (3 < trigger level < D)
31	0B	00	60	00 00 D0 D0 60 50 60 50	95	0D		KO- CRITERIA_03	more noise compared to default
31	0B	00	60	E2 E2 E2 E2 70 40 70 40	AD	0D		KO- CRITERIA_04	standard mode, more noise as default; avoid overflow at TL 96
31	04	00	2A	?? example	??	06		NC_QUAL	set default quality for NC in case that there is no mux mode or the N-signal is to week
31	04	00	2A	30	A2	06		NC_QUAL_01	(AA=V_QUALI_N_DEFAULT)
31	04	00	2A	00	D2	06		NC_QUAL_02	
31	05	00	2B	?? ?? example	??	07		NC_LIMIT	set limit for using NC in calculating the quality
31	05	00	2B	9F D9	58	07		NC_LIMIT_01	(AA=V_DMEAN_LIMIT)
31	05	00	2B	00 F0	E0	07		NC_LIMIT_02	low limit
31	05	00	2B	00 D0	00	07		NC_LIMIT_03	high limit

31	1E	00	2D	?? ... ?? example	??	20		QUALITY	parameters for quality calculation (AA=V_QPARAM)

31	0B	00	40	?? ... ?? example	??	0D	QUALITY_NC	parameters for quality calculation (AA=V_QPARAM)
31	0B	00	40	00 00 00 15 00 28 28 28	28	0D	QUALITY_01_NC	default quality (Neutral Channel)
31	0B	00	40	00 00 00 00 00 00 00 00	B5	0D	QUALITY_02_NC	no new quality (Neutral Channel)
31	07	20	00	01 02 03 04	CF	09	UPLOAD	dummy upload
31	05	00	26	85 07	49	07	TESTNCPOS	define test charge for NC
31	05	00	26	7C 07	52	07	TESTNCNEG	negative puls 15 µsec.
31	05	00	26	4F 07	7F	07	TESTNC10N	negative puls 10 µsec.
31	05	00	26	58 07	76	07	TESTNC10P	(AA=V_TEST_PULS)
31	09	00	4B	04 94 B0 04 91 B0	1F	0B	LIMIT12V	change HK out of range limits

2.7.6.2 Telemetry Items

Houskeeping Values

ITEMS	MDC Address	HSK Word		Name	meaning of Value / color 0	1
"Bilevel Data":						
MDC 1	F800h	127	B7	TEMP_OUTOF_RNG	OK/G	OUT/Y
		127	B6	HV_OUTOF_RNG	OK/G	OUT/Y
		127	B5	ANG_V_OUTOF_RNG	OK/G	OUT/R
		127	B4	DIG_V_OUTOF_RNG	OK/G	OUT/R
		127	B3	CPU_INITIALIZE	RUN/Y	END/G
		127	B2	TEST_HANDLING	OFF/B	SET/G
		127	B1	NOISE_ALARM	LO/G	HI/R
		127	B0	spare		
MDC 2	F801h	128	B7	HV_ON/OFF	OFF/B	ON/G
		128	B6	HV_ENA/DIS	DIS/B	ENA/G
		128	B5	spare		
			...			
		128	B0	spare		
"Analog Data":						
HV+200V	F802h	417		HV+200V	00h= 0 V ;	FFh=347 V
HV-200V	F803h	418		HV-200V	00h= 0 V;	FFh=347 V
TEMP	F804h	419		TEMP	00h= -279 °C;	FFh= 136 °C
TCC	F805h	420		TC-CNT		
IMPC	F806h	421		IMP-CNT		
TRIGM	F807h	422		TRIGGER		
NC1	F808h	423		NS_CNT1		
NC2	F809h	424		NS_CNT2		
EC	F80Ah	425		EVENT_CNT		

Data:

For the MDC dump (read out of the MDC RAM) 5 „master frames" each with 28 „frames" are necessary. Each frame contains 432 bytes MDC-data (contents see table 5), but only 416 real MDC-memory data. In order to get 56 kbyte there are 56 kbyte/ 416 byte < 138 frames necessary. 5 „master frames" with 28 „frames" will be 140 frames. The MDC will only update the data in the Dual Port RAM until the MDC RAM is read out completely (after 138 frames this is the case). After the last frame is transmitted this frame will stay in the Dual Port RAM and the MDC do not care any more the about transmission of data and will continue the normal operation. This means that the last two frames of the fifth master frame and all other frames from following master frames contain the same MDC data until there is a mode change to different mode and then back to the MDC dump mode.

Table 5: Contents of a MDC telemetry data frame.

Byte of data frame	Contents
0	memory address of MDC (MSB)
1	memory address of MDC (LSB)
2 - 3	00h (not used/spare)
4 - 419	data
420	CS (Check Sum) : (Σ bytes) mod 256 =0
421-431	00h (not used/spare)

The RAM starts from address 0x2000 and goes up to 0xFFFF. This 56 kbyte RAM is divided in 56 segments. As already described in table 1, each segment has one key number (first byte of each segment) which defines the contents of the segment. The normal order of key is displayed in table 6. If there is one or more test pulses sent to the MDC before there is at least one other signal recorded, the test pulses will be stored in the segments just after HSK (segment no. 54 and lower). The first signal will be then stored in the next lower segment and the segments for calibration and qualification are then also moved to a lower segment. If there are 55 test pulses sent to the MDC and then one external signal is recorded some of the stored test pulses will be overwritten as after the first recorded signal (external, no test pulse) the MDC will create a calibration signal and will do the qualification. The key of the segments for calibration and qualification is higher as the key for a test pulse (0xF6). If there has to be stored some segment into the RAM and the memory is full the segment with the lowest key (quality) will be overwritten.

Table 6: Example of the key numbers in the MDC RAM (56kbyte; Segments with 1kbyte).

Segment No..	key	name	meaning
55	0xFD	HSK	housekeeping and variables segment
54	0x??	-	signal
53	0xFF	CLD	calibration signal (test pulse after a signal)
52	0xF9	QNC	segment for qualification of neutral channel
51	0xFB	QIC	segment for qualification of ion channel
50	0xFA	QEC	segment for qualification of electron channel
49 to 0	0x??	-	Signals

Recorded signals are stored in one segment. Depending on the operation mode (bit 7 of trigger mode) two (IC,EC) or three (IC,EC,NC) channels are recorded. The transient

recorder stores 1kbyte signal data but in each segment will be stored some HSK values in order to get all necessary information's for evaluating the impact signals. For this reason there are at least 96 data points skipped of each record. The table 7 shows the contents of a signal data segment.

Table 7: The table shows the contents of a signal-data-segment. In case of test-pulse segment there will be no calibration data.

Byte of impact segment	Contents
0	quality key
1	spare
2-3	phase clock count
4	current trigger level
5-6	spare
7	PWS-flag: PWS on or off
8-11	noise count
12-14	IP-time
15-17	Impact time
18	hk_plus_5
19	hk_plus_6 (6 is now 12V)
20	hk_minus_6
21	hk_plus_200
22	hk_minus_200
23	hk_temp_electronic
24	hk_temp_box (center of motherboard)
25-31	spare
32-95	calibration data (IC and/or NC at even address)
96-1022	impact data, ions on even (in mux mode, I,E,N,E,I,E,N.....
1023	CS (Check Sum) : (1+Σ bytes) mod 256 =0

2.7.7 References

Alexander W. M., and Richards M. A. (1975): *"Lunar Ejecta in Heliocentric Space";* IAU Colloquium No. 31, Heidelberg.

Carr M. H. (1990): "Mars"; in "The New Solar System", Third Edition, Eds. J. K. Beatty and A. Chaikin, Cambridge University Press., 53-64.

Dermott S. F., Jayaraman S., Xu Y. L., Gustafson B. A. S., and Liou J. C. (1994): "A circumsolar ring of asteroidal dust in resonant lock with the Earth", Nature 369, 719-723.

Duxbury T. C. and Ocampo A. C. (1988): *"Mars: Satellite and ring search from Viking";* Icarus, 76, 160-162.

Fechtig H., Hemenway C.L. (1976): *"Near Earth Fragmentation of Cosmic Dust";* in "Lecture Notes in Physics"; „Interplanetary Dust and Zodiacal Light", Proc. of IAU-Colloquium No. 31, Edit. Elsässer H and Fechtig H., Springer Verlag, Berlin, Vol. 48, pp. 290-295.

Fechtig H., Grün E., Morfill G. (1978): *"Micrometeorids within Ten Earth Radii";* Planet. Space Science Vol. 27, pp. 511-531.

Grün E., Zook H. A., Fechtig H., and Giese R. H. (1985): *"Collisional Balance of the Meteoritic Complex";* Icarus 62, 244-272.

Horanyi M. et al. (1990): *"Toward understanding the fate of dust lost from the Martian satellites".* Geophys. Res. Lett., 17, 853-856.

Juhasz A., Tatrallyay M., Gevai G. and Horanyi M. (1993): *"On the Density of the Dust Halo around Mars";* Journal of Geophysical Research, 98, 1205-1211.

Schneider (1975): *"Impact Ejecta Exceeding Lunar Escape Velocity".* The Moon 13, 173-184.

Soter S. L. (1971): *"The dust belts of Mars".* Cornell Center for Radiophysics and Space Research Report, 462.

Zook H. A., Lange G., Grün E., and Fechtig H. (1984): *"Lunar primary and secondary microcraters and the micrometeoroid flux."* Lunar Planet. Sci. XV, 965-966.

2.8 Neutral Mass Spectrometer (NMS)

Principal Investigator:	Hasso B. Niemann	NASA/GSFC
Co-Investigators:	Sushil K. Atreya	University of Michigan
	Siegfried J. Bauer	University of Graz
	Steve Bougher	University of Arizona
	George R. Carignan	University of Michigan
	Thomas M. Donahue	University of Michigan
	Dan N. Harpold	NASA/GSFC
	Hajime Hayakawa	ISAS
	Donald M. Hunten	University of Arizona
	Wayne T. Kasprzak	NASA/GSFC
	Yayoi Miura	University of Tokyo
	Toshifumi Mukai	ISAS
	Andrew F. Nagy	University of Michigan
	Tobias C. Owen	University of Hawaii
	Naoji Sugiura	University of Tokyo
Principal Engineer:	Stanley H. Way	NASA/GSFC
Principal Mechanical Engineer:	Dan Harpold	NASA/GSFC
Principal Electrical Engineer:	Larry Frost	NASA/GSFC
	Bruce Block	University of Michigan

2.8.1 Observation Objectives

The instrument observation objective is:

- The in-situ measurement of the neutral composition, isotopic ratios and temperature of the major gas species (He, N, O, CO, N_2, NO, O_2, Ar, and CO_2).

The science objectives are:

- To determine the variation of the neutral composition with altitude, local solar time and season
- To study thermospheric energetics, transport, circulation, and evolution of the atmosphere, and the formation of the ionosphere
- To study the effects of lower atmosphere meteorological phenomenon (e.g. dust storms) on the upper atmosphere.
- To provide a basic resource for Planet-B studies of the upper atmosphere and its interaction with the solar wind.

As the spacecraft passes through periapsis, it carries out an altitude scan at one location. The Martian local time of this scan goes through an entire diurnal cycle in one Martian year, or 687 Earth days. Because of the 24° axial obliquity of the rotation axis of Mars, periapsis will scan the entire low-latitude band in a Martian year. This diurnal scan is also a seasonal one and an annual one with exactly the same periods, though seasonal effects should be small at the low latitudes covered. As shown by Mariner 6, 7, and 9 (Stewart, 1972), the UVS instrument has the capability to measure certain atmospheric constituents at latitudes and local times other than those of periapsis; the two instruments are highly complementary and synergistic.

Densities of each constituent, and temperature profiles derived from their scale heights, will be a basic resource for the other experiments on the spacecraft. This resource will typically be used in two ways: orbit-by-orbit comparisons, and comparison with a global model of densities and temperatures. Such a global model will be input to physical models of the heat balance

and general circulation (Bougher et al., 1990), and to aeronomical models treating photochemistry, transport, and recombination. Measurements of H and H_2 will give important information on escape of these gases (reviewed by Hunten, 1993).

Previous in-situ neutral upper atmosphere measurements come from the Viking pre-entry neutral mass spectrometer (Nier and Mc Elroy, 1977) at solar minimum when Mars was near aphelion. There are no data for the night side. In the altitude range 120-200 km CO_2, N_2, CO, O_2, NO and Ar (Nier and McElroy, 1977) were measured. Measurements of He, N and O are not available from these instruments. Isotopic ratios of $^{13}C/^{12}C$, $^{18}O/^{16}O$ and $^{15}N/^{14}N$ were determined near the homopause level at approximately 120 km. Helium has been detected by remote sensing (Krasnopolsky et al., 1994).

The eccentric orbit of Mars makes the solar radiation stronger at perihelion than at aphelion and there are strong seasonal variations. The combined effects of radiation at perihelion plus topography trigger global dust storms, which heat the upper stratosphere. Such effects were observed to inflate the entire atmosphere at the time of arrival of Mariner 9, raising the levels of constant density. Global pressure changes are also observed in the lower atmosphere. They are a function of season due to the sublimation of CO_2 at the poles. The solar EUV and global circulation (Bougher et al., 1990) significantly affect the upper atmosphere. Although Mars has a much less massive atmosphere than Venus, the density of the neutral atmosphere in the region 250 km - 450 km is of the same order of magnitude. Hot O and H (Nagy et al., 1990) are also expected to be present in low concentrations at high altitudes. Super-rotation of the thermosphere could be determined from measurements of thermosphere He and H as it was for Venus (e.g. Mayr et al., 1980). Wave-like perturbations are observed in the Venus thermosphere (Kasprzak et al., 1988; 1993b) which have been shown to be due to upward propagating gravity waves and similar techniques can be used to deduce wave structures in the Mars thermosphere.

Isotopic ratios are of great interest as clues to atmospheric origin and evolution. However, these measurements will be in a region of the thermosphere that is diffusively separated, and correction for this effect requires an accurate knowledge of the homopause level. To determine the homopause level the measured N_2/CO_2 ratio will be compared with the known value for the mixed atmosphere.

The Neutral Mass Spectrometer (NMS) is modification of the instrument used on the Pioneer Venus Orbiter (Niemann et al., 1980a) (ONMS) to determine the neutral gas composition and temperature in the Venus thermosphere and exosphere (Niemann et al., 1980b). The instrument operated for nearly 14 years in the Venus environment until the final pre-entry phase (Kasprzak et al., 1993a).

References:

Bougher, S.W. et al., *J. Geophys. Res.*, **95**, 14811-14827, 1990
Hunten, D.M., *Science*, **259**, 915, 1993
Kasprzak, W.T., et al., *J. Geophys. Res.*, **93**, 11237, 1988
Kasprzak, W.T., et al., *Geophys. Res. Lett.*, **20**, 2755-2758, 1993a
Kasprzak, W.T., et al., *Geophys. Res. Lett.*, **20**, 2747-2750, 1993b
Krasnopolsky, V.A. et al., *Icarus*, **109**, 337-351, 1994
Mayr, et al., *J. Geophys. Res.*, **85**, 7841-7847, 1980
Niemann, H.B. et al., *IEEE Trans. Geosci. Remote Sensing GE-18*, **60,** 1980a
Niemann, H.B. et al., *J. Geophys. Res.*, **85**, 7817-7827, 1980b
Nagy, A.F. et al., *Annales Geophysicae*, **8**, 251-256, 1990
Nier, A.O. and M.B. McElroy, *J. Geophys. Res.*, **82**, 4341-4349, 1977
Stewart, A.I., *J. Geophys. Res.*, **77**, 54, 1972

2.8.2 Instrument Specifications

Gas Sampling System	1) Closed source 2) Open source (molecular beaming) with retarding potential analyzer (RPA) energy discrimination
Ion Source	Electron impact ionization; electron energies 75 and 25 eV; in-line particle retarding
Sensitivity	$1x10^{-4}$ (counts/sec)/(part/cm^3)
Density Range	1) Ion source density about 170 cm^{-3} (signal / noise ratio = 1) to 10^{12} cm^{-3} (maximum ion source pressure 10^{-4} mbar); 2) Ambient density $2x10^4$ cm^{-3} to 10^{12} cm^{-3} (integration period = 0.011 sec)
Mass Analyzer	Quadrupole mass filter, 0.2 cm field radius, 7.5 cm rod length Radio frequencies: 3.25 mHz and 4.85 mHz
Mass range	1-60 Daltons
Scan type	1) Selected masses for rapid mass sampling; 2) unit or 1/8 Dalton scan from 1 to 60 Daltons; 3) RPA sweep at fixed mass number
Resolution/Crosstalk	< 10^{-5} for adjacent masses
Ion Detector	Two secondary electron multipliers operating in pulse counting mode (detector noise less than 1 count / minute)
Telemetry	432 bytes/packet for Science Data 80 data samples/Science Packet 2 data samples for RF 2 data samples for RPA voltage 13 bytes/packet for housekeeping data (HK) 3 bytes/packet bilevel data 10 bytes/packet analog data
	S/C Bit Rate / Integration Period (ms) / Total Sample Period (ms) / Science Packets/sec / HK Bytes/sec 64K / 11.0 / 11.62 / 1 / 13.0 32K / 22.0 / 23.24 / 0.5 / 6.5 16K / 44.0 / 46.48 / 0.25 / 3.25 512 / 1408 / 1487 / 0.0078 / 0.10
Spatial Resolution	55 meters along spacecraft track for 64K bit rate
Deployment Mechanism	Metal-ceramic breakoff cap, pyrotechnically activated
Viewing Angle (Angle of Response)	1) Closed source, approx. 2π steradians 2) Open source approx. 50° cone half-angle with respect to normal of ion source orifice
Temperature Range	-30° C to +50° C operating -40° C to +60° C survival -100° C to +200° C ion source temperature range
Mounting Requirement	Minimum obstruction of field of view
Spacecraft Parameters Required	Orbit ephemeris for location with respect to Mars and position of velocity vector, orientation of NMS axis as a function of time, knowledge of position of velocity vector with respect to NMS orifice normal within 2°

2.8.3 Instrument Configuration

The NMS sensor and electronics package is approximately cylindrical in shape with the entrance aperture of the sensor at one end of the cylinder and the electrical connectors at the other end of the cylinder. The entrance aperture is covered by a metal-ceramic breakoff hat, which is pyrotechnically activated after orbit insertion. During cruise the breakoff hat area is protected a thermal shielding. The instrument is mounted on a spacecraft panel, which also serves as mounting for the MST (Figure 2.8.3.1). The normal to the sensor aperture is also normal to the spacecraft panel and the field of view for both the open and closed ion source geometry is indicated in Figure 2.8.3.2. The electronics is mounted in an "X" shaped frame, which surrounds the cylindrical sensor housing at its center (Figure 2.8.3.3). The outer cylindrical shell also serves as electrical shield. The sensor cross-section (Figure 2.8.3.4) indicates the ion source, quadrupole analyzer and secondary multiplier detectors. The getter pump is used for maintaining the sensor under vacuum prior to opening of the sensor to the ambient atmosphere after orbit insertion. The miniature ion gauge and thermistor pressure sensor are used for monitoring the internal pressure when the sensor is on the ground and there is access to the getter housing connector. The ion source enclosure is isolated from the analyzer and detector section, and is vented separately. The interface control drawing is in Figure 2.8.3.5. The overall electronics configuration is shown in Figure 2.8.3.6. The Field Programmable Gate Array (FPGA) is responsible for various voltages needed by the sensor, and for packaging the detector and associated housekeeping data for access by the spacecraft telemetry system

2.8.4 Size, Weight, and Power Consumption

2.8.4.1 Size and Weight

Geometry	Cylindrical
Diameter	15 cm
Overall Length	33.7 cm
Length of Electronics Can Inside Spacecraft Panel	20.8 cm
Length of Electronics Can Outside Spacecraft Panel	4.85 cm
Length of Electrical Connector	0.8 cm
Length of Breakoff Cap	6.95 cm

The current best estimate for the weight is:

Weight of Sensor and Electronics	2267 g
Weight of Breakoff Hat Assembly	260 g
Weight of Mounting Bracket	200 g
Total Weight of NMS	2727 g

2.8.4.2 Power Consumption

The current best estimate for the power consumption is:

Average Power	12 watts
Peak Power	16.8 watts
Standby Model	5.5 watts

2.8.5 Operation

The principal components of the mass spectrometer sensor are: (1) an ion source, (2) a high-resolution quadrupole mass filter, and (3) two secondary electron multiplier detectors. The electron gun has filaments in a coil configuration and the electron beam is collimated and focused by electrostatic lenses. The quadrupole mass filter utilizes four precision ground hyperbolic rods mounted in a mechanical assembly. The rod spacing parameter, r_o, is 0.2 cm and rod length 7.5 cm. The quadrupole rods are excited by RF and DC potentials, which together create a dynamic electrostatic field within the quadrupole region that controls the transmitted mass (m/e value), the resolution, and the transmission efficiency. A mass scan is effected by varying the RF potential, V_{ac}, to satisfy the relationship $M = 3.44\ V_{ac}/f^2$ where V_{ac} is in volts, f is the RF frequency in megahertz, and M is in Daltons. The resolution is controlled over each mass range by programming the V_{dc}/V_{ac} ratio to maintain resolving power as defined by a crosstalk criterion appropriate for that mass range. The ion transmission efficiency will be 100% (except for end losses) over the entire mass range. The resulting flat-topped mass peaks allow a mass scan mode in which each mass is monitored by a single step to achieve the lowest detection limit in a specified period. In another operating mode, V_{dc} will be reduced to zero, which tunes the mass filter as a high pass filter giving the sum of all masses greater than, for example, 60 Daltons. The ions exiting the analyzer will be detected at the quadrupole exit by two secondary electron multipliers differing in signal detection level by about 10^3. Charge pulses at the anode of the multiplier are amplified and counted. The lower count rate is limited by the background noise of the multiplier (approximately one count per minute). The product of the multiplier pulse width and the gain bandwidth of the pulse amplifier counter system limit the upper count rate of approximately 3×10^7 counts/sec. Ion currents corresponding to count rates above 3×10^7 are measured directly with an analog current detector.

The instrument sensitivity for gas densities in both open and closed ion source mode at 100 μA electron beam current and 100% transmission of the mass analyzer is approximately 1.0×10^{-4} counts per sec per particle per cm^3. A secondary electron multiplier background count rate of one count per minute or less yields a detection threshold of ~170 particles per cm^3 in the ion source region for a signal to noise count ratio of unity. In the low mass range (less than 46 Daltons) this lower detection limit is not always realizable because of background gases, identical to those to be measured, emitted from the surrounding surfaces or because of interference at some mass numbers of other ambient gases present in high concentrations. Another source of interference is ambient gas- induced desorption of surface trapped gases. Typical background gases in the ion source, after the source is opened prior to entry into the ambient atmosphere, are H_2, CH_4, H_2O, CO, and CO_2. The upper density value is about 10^{12} particles per cm^3 limited by free path conditions in the ionization region and the analyzer section. The exact sensitivity is established by calibration and varies with species because of differing ionization efficiencies for neutrals in the ion source, transmission properties of the analyzer, and conversion efficiency at the secondary electron multiplier.

The NMS can obtain useful neutral density measurements in that part of the orbit near periapsis because of the exponential decrease of the density with increasing altitude. Nominal operation is ±10 minutes, centered on periapsis.

2.8.5.1 Mechanical

The mass spectrometer is constructed of titanium and is free of organic materials. It can be baked to 350°C for vacuum clean-up and will be maintained below 10^{-8} hPa pressure by a getter pump during launch preparation and cruise. A metal ceramic breakoff device, which provides the vacuum enclosure, is ejected pyrotechnically after Mars orbit insertion. An outline drawing of the mass spectrometer sensor identical to the PV ONMS is provided in Figure 2.8.3.5. It shows the configuration with the breakoff device removed. The sensor package outline is shown in Figure 2.8.3.4.

2.8.5.2 Electrical

The electronics design used for the NMS is based on designs utilized in the Pioneer Venus ONMS, the Huygen's Probe GCMS and the Cassini INMS. A block diagram of the electronics is shown in Figure 2.8.3.6. The Low Voltage Power Supply (LVPS) converts the spacecraft primary power to well-regulated DC voltages supplied to the instrument electronics. It also supplies regulated +5V power to the Peripheral Interface Module (PIM) located outside the NMS. The use of a transformer-coupled Pulse Width Modulated (PWM) converter allows efficient generation of the multiple secondary voltages while providing primary-to-secondary isolation. A number of stable voltages are required for biasing the ion focusing electrodes. These potentials are created by means of a small resonant converter, and are applied to the top of two multiple-resistor divider strings. The Secondary Electron Multiplier High-Voltage Supply creates an adjustable, DC output voltage in the range of -2.0 to -3.0 kV, which biases the channeltron electron multipliers. The voltage multiplier components are encapsulated in a single module to prevent arcing and corona discharge.

The radio frequency generator drives the quadrupole at two frequencies to reduce the requirements for a large amplitude change imposed by the mass range (1 to 60 Daltons). A solid state, switched bandpass filter performs frequency selection. The DC voltage is created by a pair of high-voltage operational amplifiers and superimposed on the RF waveform. Both the RF and DC amplitudes are programmed by digital to analog converters.

The Pulse Amplifier converts charge pulses detected at the anode of the electron multiplier into voltage pulses. Pulses above a preset threshold are counted. An analog measurement of the electron multiplier anode current is also provided to allow inflight gain determination.

The digital electronics of the NMS will control the mass measurement sequence, count the detector output pulses, perform analog to digital conversion of detector current, and monitor instrument housekeeping parameters. It will then format the data for collection by the spacecraft peripheral interface module (PIM). Commands to change the instrument-operating mode will be received through the PIM.

The majority of the digital logic circuits are implemented in a field-programmable gate array (SEI 1280ARP). The instrument has both Random Access Memory (RAM) and Programmable Read Only Memory (PROM). The PROM will contain a default measurement sequence that will be available without memory uploads from the spacecraft. Other sequences will require commands to be uploaded to the NMS RAM from the spacecraft.

2.8.5.3 Instrument Response

The chemical properties of the species to be measured vary from highly reactive e.g. atomic oxygen and atomic nitrogen to the nearly inert molecular nitrogen and carbon dioxide, and the noble gases argon, neon and helium. The ion source is designed for optimum measurements of both chemical reactive and inert species. The source electrode geometry and an orifice cover allow operations in two distinct modes, which can be selected electronically. For the first mode of operation, called the open source mode, the relative motion of the spacecraft with respect to the ambient atmosphere is used to discriminate between fast and slow moving ionized neutral particles using retarding potentials when the ion source is pointed in the direction of motion. The quasi-open source geometry allows ambient gas to enter the ionization region directly and chemically active species, which would be altered by collisions with surfaces, will be of particular importance in this mode. The ambient particle density will be measured directly by this method. In the second mode, particles entering through the orifice collide many times with the surfaces of the ion source electrodes and enclosure, and accommodate to the surface temperature before leaving again through the orifice. This causes a ram enhancement of the gas density in the source region when the orifice is pointed into the direction of motion. The

enhancement is proportional to the ratio of spacecraft velocity to the average thermal velocity of the gas and is dependent on the ion source temperature and species mass . The ion source particle density will be proportional to the incoming particle flux instead of the ambient density directly as is the case in the open source mode and varies approximately with the cosine of the angle of attack (angle between the orifice normal and the spacecraft velocity vector). The relationship between ion source density, incoming flux and ambient density is well understood, and will also be verified by laboratory calibration of the instrument. Non-reactive species e.g. He, Ar, CO, N_2 and CO_2 will be measured in this mode. Certain reactive species can also be measured in this mode as surface recombined reaction products (i.e. O as O_2, N as NO). The theoretical responses of both the open and closed source are given in Figure 2.8.5.3.1 and 2.8.5.3.2 respectively.

The expected mode of measurement for each species (*) is shown below:

Gas Species	RAM Factor	Ion Source Mode	Measurement at Mass	Interfering Species
H_2	11	Closed*	2	2 from recombination products of H
He	15	Closed*	4	None
N	41	Closed	30 as recombined NO	30 from ambient NO
	1	Open*	14	None
O	43	Closed	32 as recombined O_2	32 from ambient O_2, CO_2
	1	Open*	16	None
CO	40	Closed*	14, 28	28 from CO_2
N_2	40	Closed*	14, 28	28 from CO_2
NO	1	Open*	30	None
O_2	1	Open*	32	None
Ar	48	Closed*	40	None
	1	Open	40	None
CO_2	50	Closed*	44	None
	1	Open	44	None

For the closed source sensible ambient density measurements can be made from about 0-90° angle of attack and for the open source about 0-50° angle of attack. Since the spacecraft velocity vector zenith angle with respect to the positive spin axis varies from about 15° to 180°, this implies that the effective sample rate will depend on that angle and the telemetry bit rate. The maximum sample rate for a 90° velocity vector angle is shown in the table below:

S/C Data Rate (KBPS)	Sample Period (msec)	Spin Phase Angle Change for 7.5 RPM (°/sample)	Maximum Number of Data Points for Closed Source Measurement (0-90° angle of attack)	Maximum Number of Data Points for Open Source Measurement (0-50° angle of attack)
64	11.62	0.52	344	191
32	23.24	1.05	172	96
16	46.48	2.09	86	48
0.512	1487	66.9	3	1

2.8.5.4 Instrument Control

Control of the various voltages needed for the ion source, analyzer and detector, sample integration period, and packaging of the data for the PIM memory readout is done by a Field Programmable Gate Array (FPGA). A 9-instruction computer simulation is used to form the control program together with a table of RF AC and DC values (mass table). The instructions: set conditions for the mass and RPA voltage selection; loop and branch; call subroutines; and halt. The program can run in either RAM or PROM but can only be modified by uploading the 8K program to RAM. The 8K memory is divided into areas for the programs, mass tables, status data and mission data. The program is divided into subroutines, which describe the commands necessary to output 1 packet of mission telemetry data (80 data samples). Data pointers for each of the four spacecraft data rates assigned to the NMS (64kbps, 32kbps, 16kbps, and 512 bps) are used to accommodate changes in the data rate during a pass. The FPGA is set up to reference commands relative to the predicted time of periapsis.

A typical orbit scenario:

1) Upload program for next N orbits (N~10) using Block Commands
2) Run the orbit sequence:

Time	**Discrete Command (DC)**	**Number of Block Command Units (BC)**	**Function**
Tp-X1 minutes	NMS_HV_ENA	0	Enable NMS high voltages
Tp-X2 minutes	NMS_HV_ON	0	Turn-on NMS high voltages
Tp-10 minutes	NMS_RUN	2	Upload starting address and run the corresponding program for 20 minutes duration (turn-on filament, run sequence)
Tp+10 minutes	NMS_STBY	0	Halt running sequence, turn-off the filament, reset RF; enter standby mode
Tp+X3 minutes	NMS_HV_OFF	0	Turn-off NMS high voltages

Tp=estimated time of periapsis
X1, X2, X3=predetermined times based on project guidelines
Note: NMS STBY must be executed prior to NMS_HV_OFF

2.8.5.5 Instrument Modes

Name	Values	Comment
Electron energy	75 or 25 eV	75 eV nominal
Mass selection	Programmed	Selected mass numbers (e.g. 14, 16, 28,30,32,44)
	1 Dalton sweep	Step mass 1,2,3...60
	1/8 Dalton sweep	Step mass 1,1 $^{1}/_{8}$, 1 $^{2}/_{8}$,....59 $^{7}/_{8}$, 60
RPA voltage	Closed mode	No particle retarding
	Open mode	Particle retarding with mass dependent voltage
	Sweep	Sweep RPA voltage
Filament	ON or OFF	ON nominal
SEM voltage	HIGH or LOW	Set secondary electron multiplier (SEM) voltage
Counter threshold	HIGH or LOW	Set pulsecounter discriminator threshold
XIG grid	ON or OFF	ON nominal

2.8.6 Command and Telemetry Items

2.8.6.1 Command Items

2.8.6.1.1 Discrete Commands (DC)

PIM ID	SUBSYSTEM
0E	NMS

CODE		COMMAND NAME	FUNCTION	TELEMETRY	
X	Y			Block Command Units (BC's)	STATUS REPORT (DIGITAL HK)
2	5	NMS_HV_ENA	Enable NMS high voltages	0	NMS3 (W 129) B0 set to 1
2	6	NMS_HV_ON	Turn-on NMS high voltages	0	NMS1 (W 129) B7 set to 1
2	7	NMS_HV_OFF	Turn-off NMS high voltages	0	NMS3 (W 129) B0 set to 0
2	B	NMS_RUN	Upload a sequence pointer (in 2 BC's) and Run the sequence	2	NMS1 (W 129) B5 set to 1
2	C	NMS_STBY	Halt the running sequence	0	NMS1 (W 129) B5 set to 0
3	0	NMS_PYRO1_ARM	Enable firing circuit 1	0	NMS3 (W 131) B7 set to 1
3	3	NMS _PYRO1_FIRE	Turn on firing circuit 1 to fire pyro 1	0	NMS3 (W 131) B6 set to 1
3	8	NMS_PYRO2_ARM	Enable firing circuit 2	0	NMS3 (W 131) B5 set to 1
3	A	NMS _PYRO2_FIRE	Turn on firing circuit 2 to fire pyro 2	0	NMS3 (W 131) B4 set to 1
3	E	NMS_PYRO_SAFE	Turn off firing circuit 1 and 2	0	NMS3 (W 131) B7,B6,B5,B4 set to 0

2.8.6.1.2 Block Commands (BC)

Block commands are used to set instrument parameters, and to load and dump program areas.

1) Program load:

DC: "BUS-ACCESS-ENABLE"

512 BC units are transferred to the NMS memory.
A full program upload of 8K will require 16 blocks of data to be transferred

2) NMS program dump:

DC: "BUS-ACCESS-ENABLE"

256 bytes of are transferred from the NMS memory to Backup File Memory (BFM). A full program dump will require 32 blocks of data to be transferred

3) Upload new sequence pointer address:

DC: NMS_RUN
2 bytes transferred to the NMS memory. The format is:

Address	Byte	B0	B1	B2	B3	B4	B5	B6	B7
FE01	First Byte	P15 0=ROM MODE 1=RAM MODE	0	0	P12	P11	P10	P9	P8
FE02	Second Byte	P7 (MSB)	P6	P5	P4	P3	P2	P1	P0 (LSB)

where P0 to P12 constitute the address of the program to be run in NMS memory.

2.8.6.2 Telemetry Items

The mission telemetry packet contains:

NMS PIM ID code	0E					
FORMAT	FORMAT_10: Observation_P (64KBPS,32KBPS,16KBPS, 512 BPS) Periapsis Mode					
Science Packet Sequence Numbers	8,24,40,56					
HK Packet Sequence Numbers	0,16,32,48					
(NMS / Total) Packets	4 / 64					
HK Bilevel Data	IM I/F Adrs.	Name	Word	# bits		
	F800	NMS1	W 129	8		
	F801	NMS2	W 130	8		
	F802	NMS3	W 131	8		
HK Analog Data	Adrs.	Name	Word	# bytes	Symbol	Item
	F803	NMS	W 426	1	NMS RF-T	RF TEMP
	F804	NMS	W 427	1	NMS EM-V	EM MON
	F805	NMS	W 428	1	NMS PS_T	PS TEMP
	F806	NMS	W 429	1	NMS FB_T	F/B TEMP
	F807	NMS	W 430	1	NMS HVB_V	HVB CONTROL
	F808	NMS	W 431	1	NMS EVC-V	eV CONTROL
	F809	NMS	W 432	1	NMS EMC_V	EM CONTROL
	F80A	NMS	W 433	1	NMS HVR-V	HV REG
	F80B	NMS	W 434	1	NMS +5V	+5V MON
	F80C	NMS	W 435	1	NMS-I	I MON

2.8.6.2.1 HK Status (Bilevel) Data

PIM I/F ADDR. (Hex)	NAME	WORD	BIT	NAME	STATUS	
					0	1
F800	NMS1	W 129	B0 (MSB)	512 BPS data rate	NO	YES
			B1	16 KBS data rate	NO	YES
			B2	32 KBS data rate	NO	YES
			B3	64 KBS data rate	NO	YES
			B4	ROM / RAM mode	ROM	RAM
			B5	RUN / STBY	STBY	RUN
			B6	Filament	OFF	ON
			B7 (LSB)	High voltage	OFF	ON
F801	NMS2	W 130	B0 (MSB)	RF enable	RESET	ENABLE
			B1	OPEN MODE flag	OFF	ON
			B2	Discriminator 2 threshold	LOW	HI
			B3	Discriminator 1 threshold	LOW	HI
			B4	External grid (xig)	HI	LOW
			B5	eV	LOW	HI
			B6	Electron multiplier voltage	LOW	HI
			B7 (LSB)	Electron Multiplier	OFF	ON
F802	NMS3	W 131	B0 (MSB)	HV enable	DISABLE	ENABLE
			B1	DC command counter bit 2	MSB	
			B2	DC command counter bit 1		
			B3	DC command counter bit 0	LSB	
			B4	Pyro 2 fire	NOFIRE	FIRE
			B5	Pyro 2 arm	UNARM	ARM
			B6	Pyro 1 fire	NOFIRE	FIRE
			B7 (LSB)	Pyro 1 arm	UNARM	ARM

2.8.6.2.2 HK Data (Analog) Values

WORD	ADRS (Hex)	SYMBOL	ITEM	UNIT	RANGE		CONVERSION SYSTEM $y = a_0 + a_1 * x + a_2 * x^2$ x = digital HK value (decimal), y = converted HK value		
					MIN.	MAX.	a_0	a_1	a_2
427	F804	EM MON	Electron multiplier	μA	0	130	-68.4	0.53	0.
430	F807	HVB CONTROL	High voltage bias control	V	-0.5	+2.5	-5.107	0.040	0,
431	F808	eV CONTROL	Electron voltage control	V	-0.5	+3.0	-5.107	0.040	0.
432	F809	EM CONTROL	Electron multiplier control	V	+0.1	+3.0	-5.107	0.040	0.
433	F80A	HV REG	High voltage monitor	V	0.3	4.0	-313.50	2.447	0.
434	F80B	+5V MON	+5 voltage	V	4.7	5.1	-5.311	0.041	0.
435	F80C	I MON	NMS Current	A	0.3	.80	-1.583	0.012	0.
							$y = 1 / (b_0 + b_1 \ln(rt) + b_3 \ln(rt)^3) - 273.15$ $v = -5.106984 + 0.039870 * x$, $rt = ABS(v * 18.7 / (5 - v))$ x = digital HK value (decimal), y = converted HK value		
							b_0	b_1	b_3
426	F803	RF TEMP	RF temperature	°C	-40	70	0.002498	0.000247	3.751E-07
428	F805	PS TEMP	Power supply temperature	°C	40	70	0.002498	0.000247	3.751E-07
429	F806	F/B TEMP	Filament bias board temperature	°C	40	70	0.002498	0.000247	3.751E-07

2.8.6.2.3 NMS Science Packet

PIM Address range: FA00-FBAF

The short descriptive list is below with a detailed list following it:

Beginning Byte	Ending Byte	No. Bytes	Content
1	1	1	NMS PIM ID=0E
2	8	7	Program status information
9	11	3	HK bilevel status NMS1,NMS2,NMS3
12	16	5	Time of packet
17	44	28	Memory readout
45	46	2	RF counter readout packet for first sample integration
47	48	2	RPA digital value packet for first sample integration
49	428	380	80-samples detector 1, 80-samples detector 2, 20-samples of analog housekeeping
429	430	2	RF counter readout for last sample integration
431	432	2	RPA digital value for last sample integration

Data Address	Description	Byte #	Note
FA00	NMS PIM ID	1	"NMS PIM Id = 0E: bit7 .. bit0 = 00001110 (Fixed); bit 7=MSB, bit 0=LSB"
FA01	Sequence ID (SID)	1	A number indicated what version and number of sequences that the current subroutine belonged to.
FA02..FA03	SID+Subroutine Address	2	Bit 7 to Bit 5 in 2nd byte = Bit 10 to Bit 8 of SID; The rest are memory address contained in the CALL SUB instruction to start the current subroutine.
FA04..FA05	Frame Count	2	Count of packet output; increments at EMR (End of Memory Read)
FA06..FA07	Index Number	2	Index Number of the current loop.
FA08	Status 0	1	HK Status 0
FA09	Status 1	1	HK Status 1
FA0A	Status 2	1	HK Status 2
FA0B..FA0D	TI of IP	3	Latched on the most recent Index Pulse (IP) after start of first integration period in the current packet
FA0E..FA0F	Phase Count	2	Latched at start of first integration period in the current packet
FA10..FA2B	Mem Check Data	28	28 bytes of memory data as a block following the block in the previous packet.
FA2C..FA2D	RF Freq (1st)	2	RF count sampled in the first mass period of the current packet
FA2E..FA2F	RPA (1st)	2	Data to set RPA voltage in the 1st integration in the current packet.

FA30..FA31	A Counts	2	Counts from Channel A, mass sample 1
FA32..FA33	B Counts	2	Counts from Channel B, mass sample 1
FA34..FA35	A Counts	2	Counts from Channel A, mass sample 2
FA36..FA37	B Counts	2	Counts from Channel B, mass sample 2
FA38..FA39	A Counts	2	Counts from Channel A, mass sample 3
FA3A..FA3B	B Counts	2	Counts from Channel B, mass sample 3
FA3C..FA3D	Analog chan value	2	4 bit Mux addr + 12 bit A/D sampled after 4th mass samples
FA3E..FA3F	A Counts	2	Counts from Channel A, mass sample 4
FA40..FA41	B Counts	2	Counts from Channel B, mass sample 4
FA42..FA43	A Counts	2	Counts from Channel A, mass sample 5
FA44..FA45	B Counts	2	Counts from Channel B, mass sample 5
FA46..FA47	A Counts	2	Counts from Channel A, mass sample 6
FA48..FA49	B Counts	2	Counts from Channel B, mass sample 6
FA4A..FA4B	A Counts	2	Counts from Channel A, mass sample 7
FA4C..FA4D	B Counts	2	Counts from Channel B, mass sample 7
FA4E..FA4F	Analog chan value	2	4 bit Mux addr + 12 bit A/D sampled after 8th mass samples
FA50..FA51	Mass Table Address	2	Mass table address of the 8th sample in the current block
FA52..FA53	A Counts	2	Counts from Channel A, mass sample 8
FA54..FA55	B Counts	2	Counts from Channel B, mass sample 8
FA56..FA7B	Data of 2nd 8-Samples	38	Previous block repeats nine more times
FA7C..FAA1	Data of 3rd 8-Samples	38	
FAA2..FAC7	Data of 4th 8-Samples	38	
FAC8..FAED	Data of 5th 8-Samples	38	
FAEE..FB13	Data of 6th 8-Samples	38	
FB14..FB39	Data of 7th 8-Samples	38	
FB3A..FB5F	Data of 8th 8-Samples	38	
FB60..FB85	Data of 9th 8-Samples	38	
FB86..FBAB	Data of 10th 8-Samples	38	
FBAC..FBAD	RF Freq (Last)	2	RF count sampled in the last mass period of the current packet
FBAE..FBAF	RPA (Last)	2	Data to set RPA voltage in the last integration in the current packet.
	Spare Bytes	0	
	TOTAL	432	

Note: For data has more than one byte, the first byte is lower byte.

2.8.7 Particular Cares Required

The field of view should be kept as clear as possible of spacecraft objects. The effect of an obstruction is to shadow the NMS ion source from the ambient gas flow. Obstructions also act as an outgassing source and a source of particulate contamination.

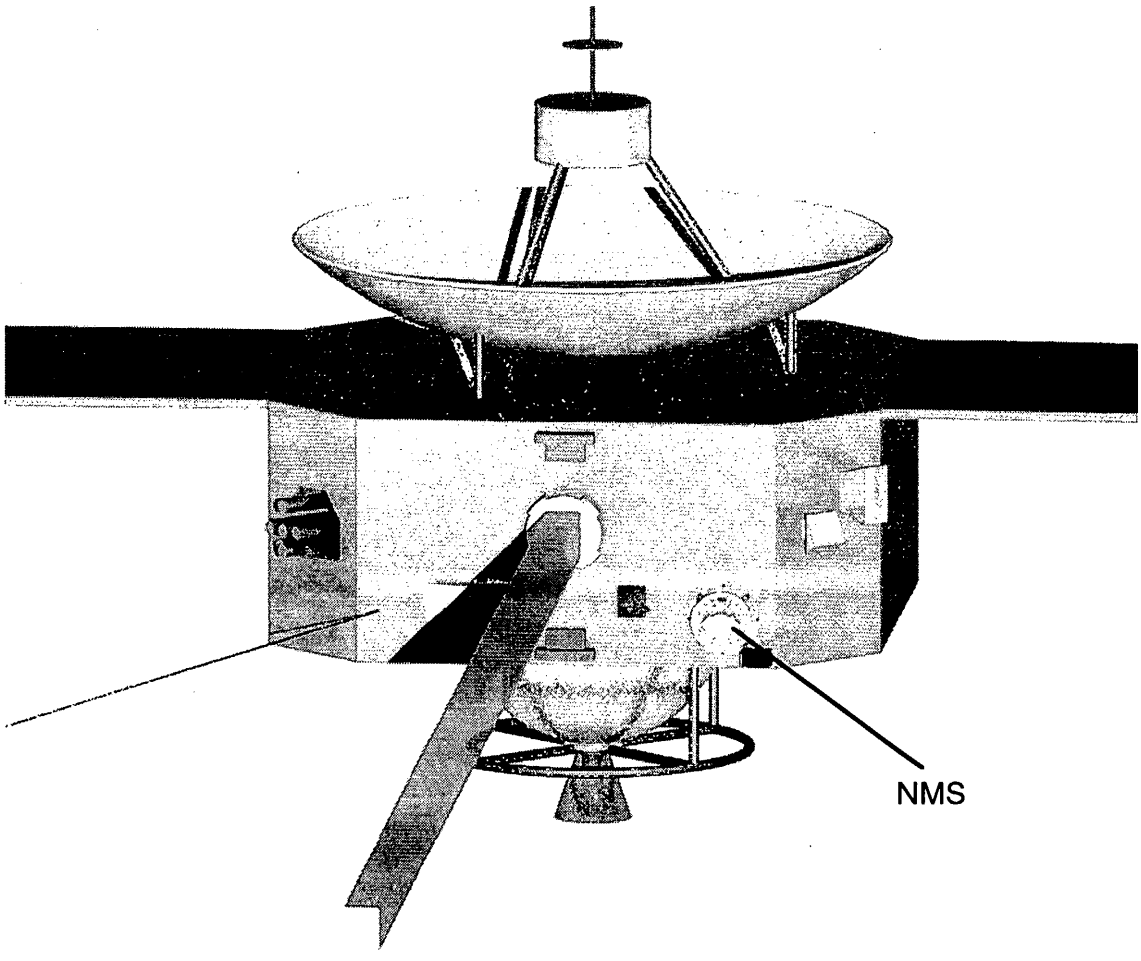

Figure 2.8.3.1 Mounting of the NMS in the spacecraft.

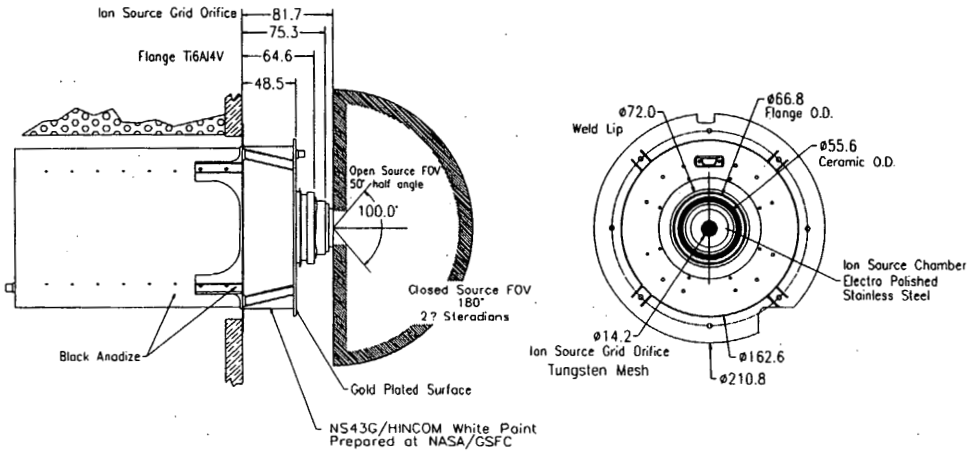

Figure 2.8.3.2 NMS field of view and ion source aperture detail. Dimensions are in mm.

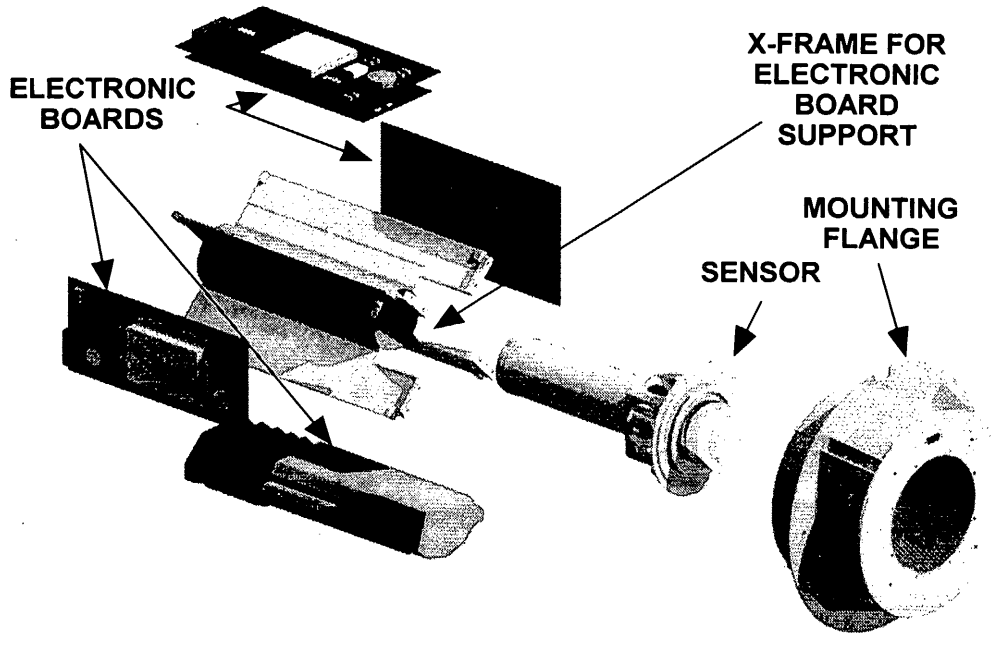

Figure 2.8.3.3 An exploded view of the mechanical elemenets of the NMS.

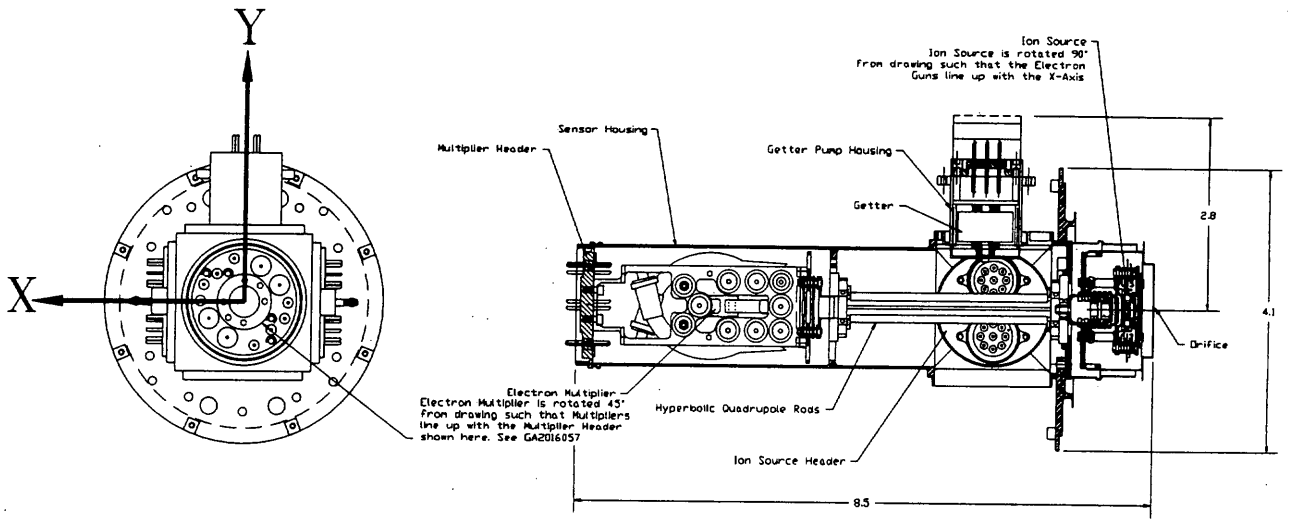

Figure 2.8.3.4 Outline drawing of the NMS sensor showing major elements.

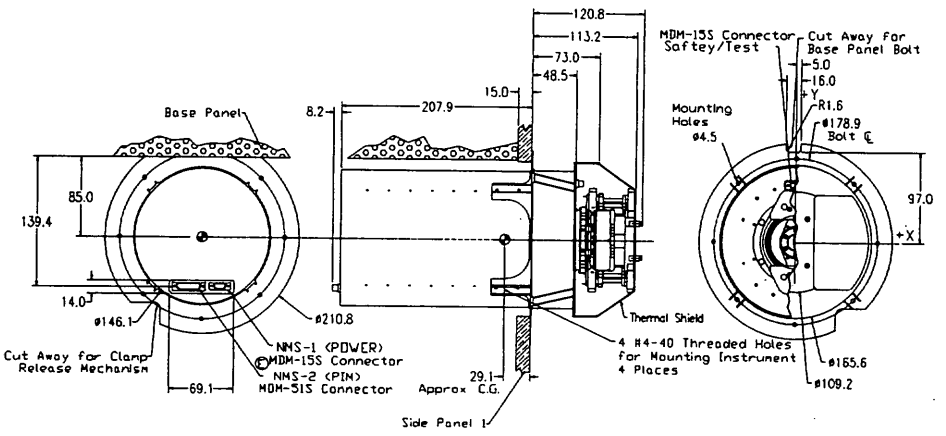

igure 2.8.3.5 Interface control drawing for the NMS sensor. dimensions are in mm.

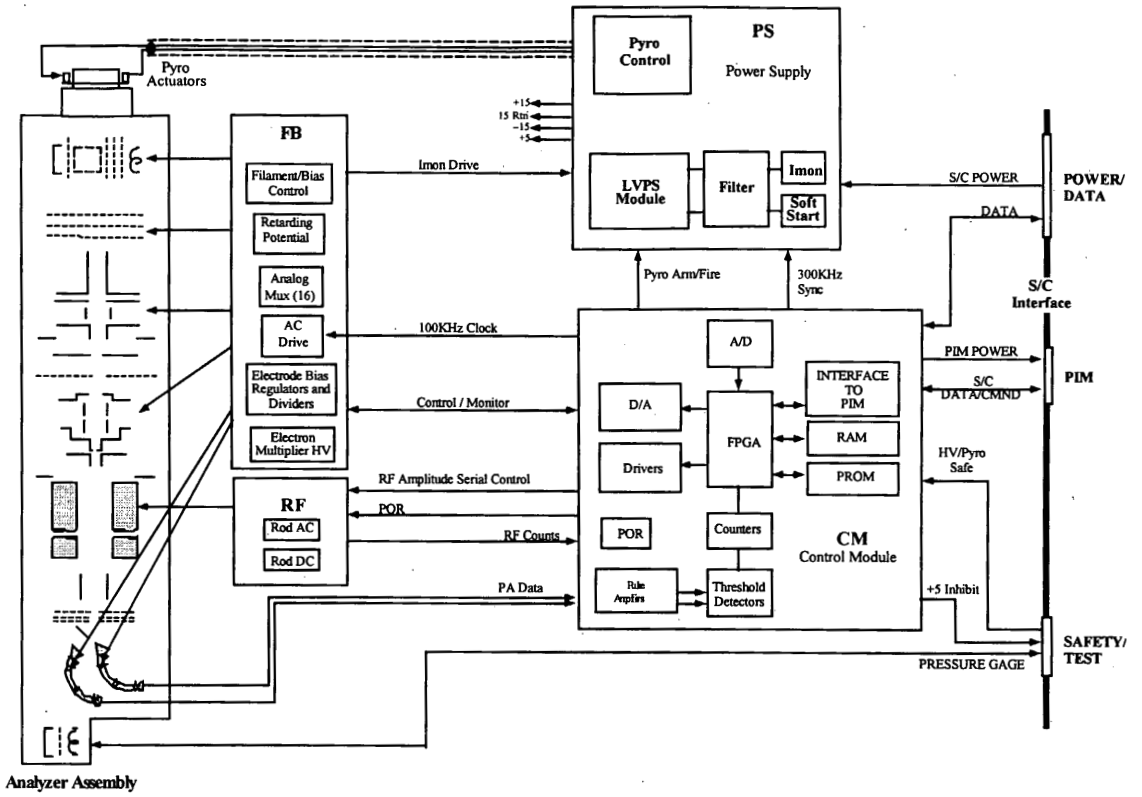

Figure 2.8.3.6 Block diagram of the main elements of the NMS electronics support system.

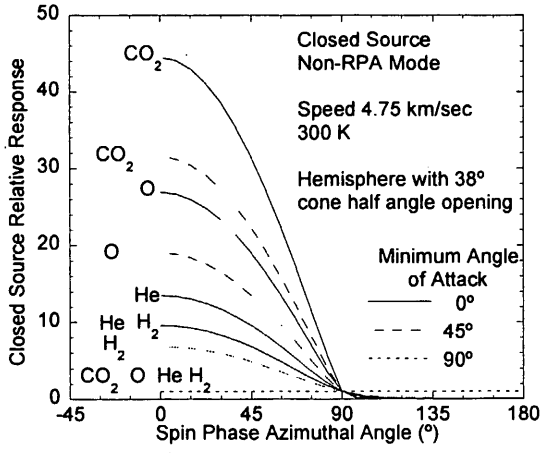

Figure 2.8.5.3.1 The closed source response for species CO_2, O, He and H_2 at three different minimum angles of attack plotted as a function of the spin phase azimuth angle for a periapsis speed of 4.7 km/sec. The ram enhancement at 0° varies as the square root of the species mass while at 90° no enhancement occurs. The ions source density at 90° is approximately equal to the ambient density except for thermal transpiration.

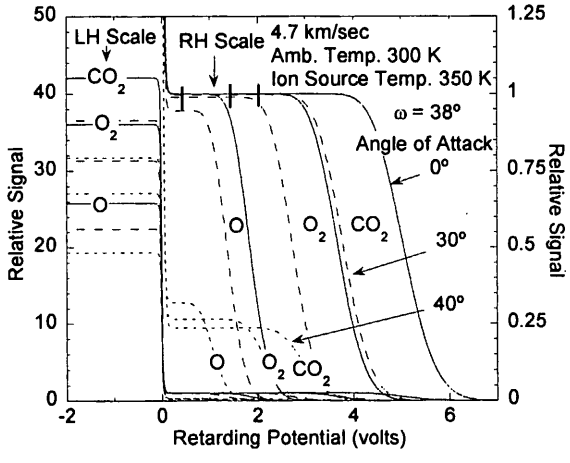

Figure 2.8.5.3.2 The combined open and closed source response as a function of retarding potential for three gas species CO_2, O_2, and O at three different angles of attack. The heavy vertical lines mark the nominal position of the retarding potential to be used for flight operation of the open source to discriminate against the thermally accommodated species.

2.9 Radio Science Experiment in PLANET-B Mission

Science Team

Principal Investigator:	K.-I. Oyama	The Institute of Space and Astronautical Science, Japan
Co-Investigator:	E. Mizuno	ISAS, Japan
	Z. Yamamoto	ISAS, Japan
	T. Takano	ISAS, Japan
	H. Hirosawa	ISAS, Japan
	T. Imamura	ISAS, Japan
	I. Nakatani	ISAS, Japan
	K.-I. Tsuruda	ISAS, Japan
	K. Yokoyama	ISAS, Japan
	L. Tyler	Astrophysics Laboratory, Stanford Univ., Menlopark, Stanford
	R. Simpson	Astrophysics Laboratory, Stanford Univ., Menlopark, Stanford
	D. Hinson	Astrophysics Laboratory, Stanford Univ., Menlopark, Stanford
	P. Rosen	Jet Propulsion Laboratory, Pasadena

2.9.1 Major Scientific Objectives

Objectives of Radio Science are; (1) to measure electron density height profile, (2) to measure neutral atmosphere, and (3) to measure the turbulence in the solar atmosphere. By means of the electron density profiles, interaction between solar wind and Mars ionosphere can be studied. The energy density of solar wind which is observed to be larger than that of Mars ionosphere makes us conclude that Mars ionosphere must be totally pressed by the solar wind. However, Mars ionospheres are still observed. This seems to suggest strongly the existence of weak intrinsic magnetic field of the order of 30-40 nT in Mars ionosphere (Krimskii et al., 1995). If it exists, even with the weak magnetic field, the strong plasma tranport from dayside to nighttime ionosphere which can operate in Venus ionosphere (Knudsen et al., 1980) will be supressed, which leads to a big density slope between dayside and nightside ionosphere. On the contrary to the Venus ionosphere, no ionopause like structure has not been observed so far. One reason for this might be the existance of intrinsic magnetic field. Another possibility might be that ionopause at Mars is located at the higher altitude where electron density is lower than 10^3 els/cc. Past radio occultation has measured only electron density of above 10^3 els/cc, and therefore the radio occultation technique could not detect in the past.

Neutral density of Mars is measured from the Mars surface up to the height of about 50 km by means of ultrastable oscillator onboad PLANET-B spacecraft. As radio science can measure both neutral atmosphere and ionosphere almost simultaneously, effect of neutral atmosphere upon ionosphere such as during dust storm (Zhang et al., 1990) as well as during normal weather can be studied. The coupling between climate of lower altitude and ionosphere at higher altitude which has not been studied on the Earth can be studied on Mars. PLANET-B Radio Science is

expected to contribute to an improved understanding of the circualr, dynamics and transport of volatiles and dust in the atmosphere of Mars and to a more detailed light-up of the Mars climate. Our study might be able to be extended to the topography of Martian surface (Kliore et al., 1973 and Fjeldbo et al., 1977).

2.9.2 Observation

Radio occultation relies on the inversion of wave phase path measurements to obtain the refractivity profiles and hence the electron density and neutral density profiles of Mars (Fjeldbo and Eshleman, 1968). The Martian atmosphere has been studied by this method with Mariner 4 (Kliore et al., 1965; Fjeldbo et al., 1966). Mariner 6 and 7 (Fjeldbo et al., 1970), and Mariner 9 (Kliore et al., 1972, 1973) as well as Mars 2 (Kolosov et al., 1976), Mars 4, 5, and 6 (Vasiliev et al., 1975; Savich and Samovol, 1976). Only five electron density profiles up to solar zenith angle 127° were observed in the nighttime from Mars 4 and 5, and Viking 1 and 2 in 1974 and 1977, respectively (Vasiliev et al., 1974, 1975; Zhang et al., 1990; Kliore, 1992). Tyler et al., (1992) recently reviewed Radio Science with the Mars observer.

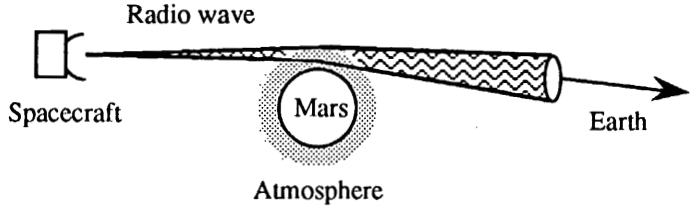

Figure 1. Concept of the study on Martian atmosphere by Radio Science

Radio science by means of the Mars orbiter is only possible when the raypath of the radio wave transmitted from the spacecraft to the earth penetrates the atmosphere or the ionosphere of Mars (Fig.1). Since the refractive index during the raypath penetration slightly different from unity (several parts in 10^{-6} at maximum), the radio wave is refracted, or scattered. The effect of the variation of the refractive index appears as the variation of the amplitude and/or phase in the received signal. The trajectory of the spacecraft during its Mars orbital phase is designed so that the spacecraft is occulted by Martian atmosphere and ionosphere as frequently as possible. The spacecraft velocity perpendicular to the line of sight also affects the observation since the variation in the amplitude and phase of the signal is a function of the position of the spacecraft, and the position is mapped into time through the velocity.

Usuda Deep Space Center (UDSC), located in Usuda Town, Nagano, Japan (geographic longitude; 147°, latitude; 38°), will be used as the main data collection station. If we can use other receiving stations equipped with an appropriate data recording system, the opportunity to do radio science can be increased, if it is located far in longitude from Usuda and therefore can cover the time period while the spacecraft is not visible from Usuda Deep Space Center. Receivings of the radio signals using foreign deep space antennae are currently being explored in order to maximize the PLANET-B mission.

Time table for the preparation of radio science before the launch, and radio science-related actions after the launch are;

Before the launch: Characterization of the onboard oscillator stability
Completion of data acquisition system for both S and X bands

After the launch:

Cruise phase: Characterization of the onboard oscillator stability, evaluation of the effect of Earth ionosphere and neutral atmosphere, and the front-to-end test of the data acquisition system

Solar conjunction: Observation of solar plasma

Mars orbital phase: Observation of atmosphere and ionosphere of Mars

All observations of the Martian neutral atmosphere and ionosphere need to be conducted using one way (based on the onboard oscillator) mode to eliminate the effect of the media onto the uplink radio wave, and any modulation of the radio wave need to be turned off to increase the carrier power. Coherently related S and X band radio waves are used simultaneously to know the frequency dependence of the phase and amplitude variation. The effect of ionosphere plasma or of solar wind plasma should be separated from the effect of neutral atmosphere with better accuracy by using two frequencies. Apart from our major purpose to study the Martian atmosphere, studies on the Sun atmosphere or solar wind related studies are possible during the solar conjunction of the spacecraft (Tyler et al., 1977). It might be also possible to detect anomalous gravity of Mars.

Time scale	Square root of Allan variance
1 s	5×10^{-13}
10 s	5×10^{-14}
100 s	5×10^{-15}
1000 s	1×10^{-15}

Table 1. Stability of Hydrogen maser at USDA

2.9.3 Data Acquisition

Since the observation by radio occultation is based on the measurement of the amplitudes and phases of the radio waves, those information need to be preserved all through the data recordings. An open-loop receiver (Fig.2) will be used for this purpose. It simply records the received signal coherently after converting S or X band signals (2 GHz and 8 GHz) down to video band (20 kHz). Hydrogen maser will be used to generate all local signals of downconverters, which should preserve the phase information (see Table 2). The frequency stability of the hydrogen maser is much better than that of the oscillator onboad the spacecraft.

The signals which are finally downconverted to the 20 kHz video band are digitized with 16 bits and sampled at 80 kHz. The data rate for two signals, therefore, amounts 2.56 M bytes/sec. The data acquisition system is designed so that about 20 hours observation be recorded in one memory tape which stores 10 G bytes at UDSC.

The data will be transferred to ISAS after the acquisition and physical information will be extracted using software libraries which are currently being developed.

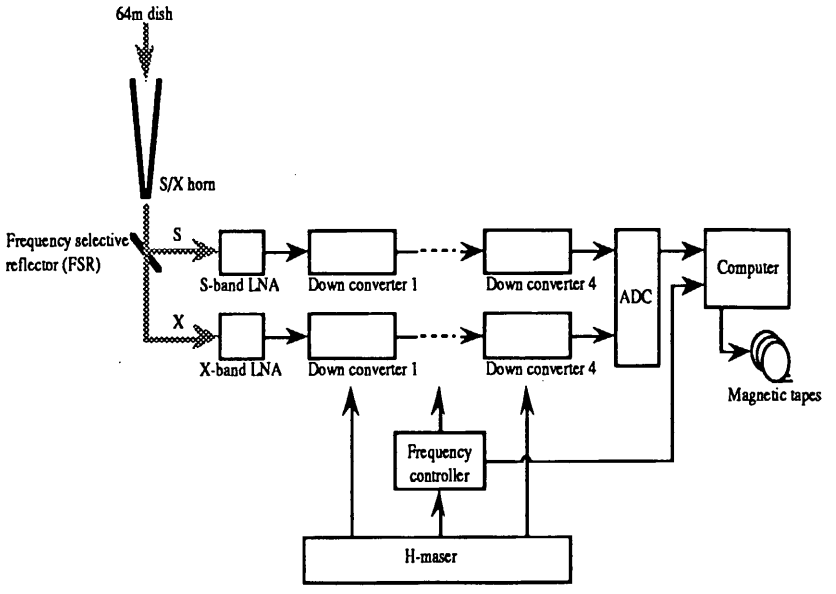

Figure 2. Open-loop data recording system designed for USDC

Compressed and archived data set will also be created from the original data and distributed using anonymous ftp and/or WWW service to other researchers. The orbit period of PLANET-B is 38 hours and occultation of the radio waves by Mars at one station (for example at USUDA) is at most once per three days. Therefore it would be very difficult to do good science only with one station data. Therefore to receive occultation signal at different longitude stations such as at Madrid in Spain and Goldstone in USA is very important and the effort is being made along this line.

Time scale	Square root of Allan variance
0.1 s	$< 3 \times 10^{-12}$
1 s	$< 4 \times 10^{-13}$
10 s	$< 3 \times 10^{-13}$
100 s	4×10^{-13}

Table 2. Phase (frequency) stability required to the oscillator onboad the planet-B spacecraft

2.9.4 Requirement to the Onboard System

The frequency of onboard oscillator needs to be stable enough to study neutral atmosphere of Mars, because the phase variation is the same for the two frequencies, while it is different in plasma environment. In the case of S-band (2.3 GHz), the total phase variation due to the Martian neutral atmosphere is estimated to be ~20 cycles when the radio wave travels near the surface of Mars (Fig.3) and ray bending angle is ~0.01 degrees. That is, to measure such a small phase variation, the phase (or frequency) stability of the onboard oscillator needs to be as good as shown in Table 2. The ultra stable oscillator (USO) which is supplied by Applied Physics Laboratory, John Hopkins University, through NASA, gives better frequency stability than that was used in Voyager mission (Tyler, 1987), as shown in Table 3. The frequency stability of the oscillator enables us to detect the electron density of 10^2 els/cc in the height profile.

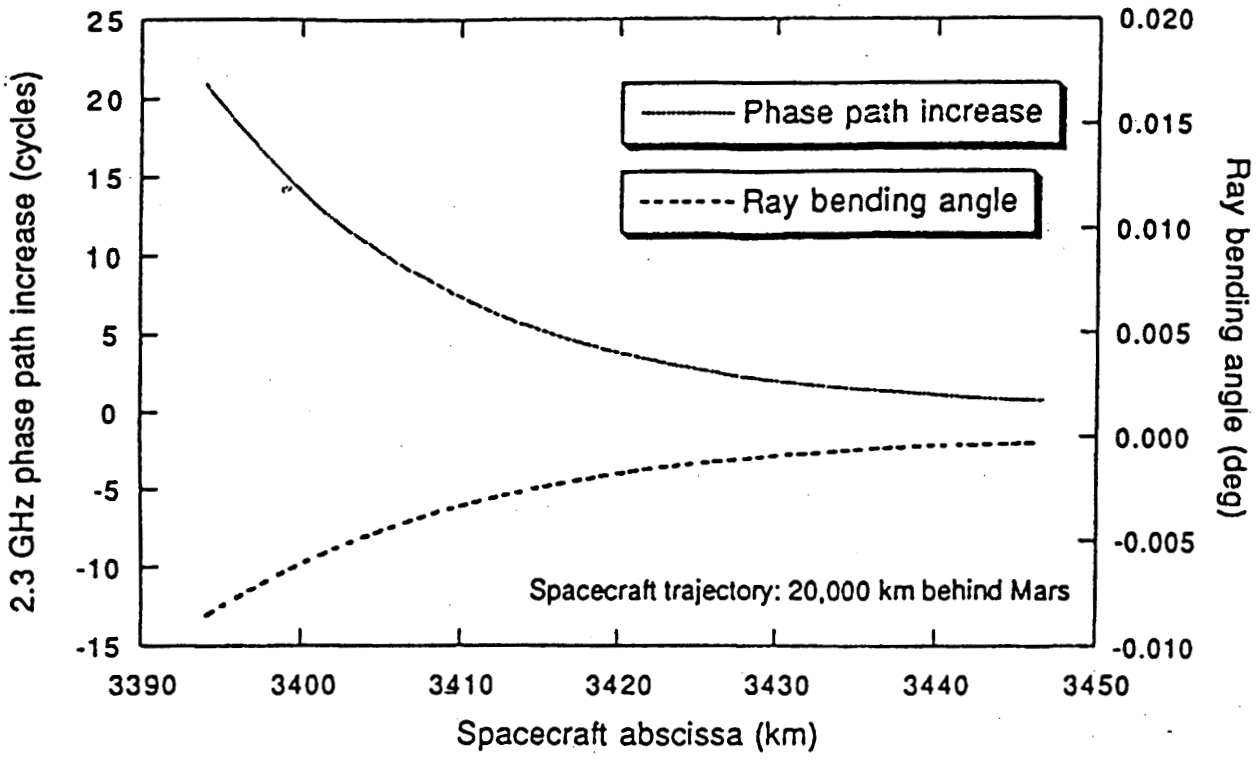

Figure 3. Phase change (dotted line) and ray bending (thick dotted line) due to Mars neutral atmosphere

Time scale	Voyager	Mars Observer	Planet-B* (measured)
0.1 s		5.0×10^{-13}	
1 s	8.5×10^{-12}	1.0×10^{-12}	4.1×10^{-13}
10 s	1.5×10^{-12}	4.0×10^{-13}	2.6×10^{-13}
100 s	1.3×10^{-12}	4.0×10^{-13}	2.0×10^{-13}
1000 s	2.0×10^{-12}	4.0×10^{-13}	(4.0×10^{-13})

Table 3. USO allan variance for three spacecrafts
(* measured at Applied Physics Laboratory, John Hopkins University)

References

Fjeldbo, G., W. C. Fjeldbo, and V. R. Eshleman, Atmosphere of Mars: Mariner 4 models compared, *Science*, 153, 1518-1523, 1966.

Fjeldbo, G., and V. R.Eshleman, The atmosphere of Mars analyzed by integral inversion of the mariner IV occultation data, *Planet Space Sci.*, 16, 1035-1059, 1968.

Fieldbo, G., A. Kliore, and B. Seidel, The Mariner 1969 occultation measurements of the upper atmosphere of Mars, *Radio Sci.*, 5, 381-386, 1970.

Michael, Jr., A. Wallo, and M. Grossi, Viking radio occultation measurements of the Martian atmosphere and topography, primary mission coverage, *J. Geophys. Res.*, 82, 4317-4324, 1977.

Kliore, A. J., D. L. Cain, G. S. Levy, V. R. Eshleman, G. Fjeldbo, and F. O. Drake, Occultation experiment: Results of the first direct measurements of Mars atmosphere and ionosphere, *Science*, 149, 1243, 1965.

Kliore, A. J., D. L. Cain, G. Fjeldbo, B. L. Seidel, M. J. Sykes and S. I. Rasool, The atmosphere of Mars from Mariner 9 radio occultation measurements, *ICARUS*, 17, 484-516, 1972.

Kliore, A. J., G. Fjeldbo, B. L. Seidel, M. J. Sykers, and P. M. Woiceshyn, S band radio occultation measurements of the atmosphere and topography of Mars with Mariner 9: Extended mission coverage of polar and intermediate latitudes, *J. Geophys. Res.*, 78, 4331-4351, 1973.

Kliore, A. J., Radio occultations of the ionospheres of Mars and Venus, in Venus and Mars: Atmospheres, ionosphere, and solar wind interaction., *Geophys. Monogr. Ser.*, 66, edited by J. G. Luhman, M. Tatrallyay, and R. O. Repin, 265-276, AGU, Washington, D. C., 1992.

Knudsen W. C., K. Spenner, K. L. Miller, and V. Novak, Transport of ionospheric O^+ ions across the Venus terminator and implications, *J. Geophys. Res.*, 85, 7803-7810, 1980.

Kolosov, M. A., V. M. Ivanov, D. S. Lukin, and Y. G. Spiridonov, Radio occultation of the Martian ionosphere taking into account horizontal gradients of electron density, *Space Res.*, 16, 1013-1017, 1976.

Krymskii, A. M., T. Breus, and E. Nielson, On possible obsrvational evidence in electron density profile of a magnetic field in the Martian ionosphere, *J. Geophys. Res.*, 100, 3721-3730, 1995.

Savich, N. A., and V. A. Samovol, The nighttime ionosphere of Mars from Mars 4 and Mars 5 dual frequency radio occultation measurements, *Space Res.*, 16, 1009-1011, 1976.

Tyler. G. L., J. P. Brenkle, T. A. Komarek, and A. I. Zygielbaum, The Viking solar corona experiment, *J. Geophys. Res.*, 82, 4335-4340, 1977.

Tyler, G.L., Radio propagation experiments in the outer solar system with Voyager, Proc. IEEE, 75, 1404-1430, 1987.

Tyler. G. L., G. Balmino, D. Hinson, W. L. Sjogren, D. E. Smith, R. Woo, S. W. Asmar, M. J. Connally, C. L. Hamilton, and R. A. Simpson, Radio science observations with Mars observer, J. *Geophys. Res.*, 97, 7759-7779, 1992.

Vasiliev, M. B., The discovery of the nightside ionopshere of Mars (in Russia), *Dokl. Akad. Nauk, SSSR*, 218, 1298-, 1974.

Vasiliev, M. B., Preliminary results of the dual frequency radio occultation of the Martian ionosphere with the aid of Mars 5 spacecraft, *Kosm. Issled.*, 13, 48-, 1975.
Zhang M. H. G., J. G. Luhmann, A. J. Kliore, and J. Kim, A post-pioneer Venus reassessment of the Martian dayside ionosphere as observed by radio occultation methods, *J. Geophys. Res.*, 95, 14829-14839, 1990.

Zhang, M. H. G., J. G. Luhmann, and A. J. Kliore, An observational study of the nightside ionosphere of Mars and Venus with radio occultation methods, *J. Geophys. Res.*, 95, 17095-17102, 1990.

2.10 Theory and Modeling

Principal Investigator:	Hiroyuki Shinagawa	STEL, Nagoya University
Co-Investigator:	Tatsuki Ogino	STEL, Nagoya University
	Masahiro Hoshino	ISAS
	Kiyoshi Maezawa	Nagoya University
	Masaki Fujimoto	Tokyo Institute of Technology
	Toshio Terasawa	University of Tokyo
	Katsuhide Marubashi	CRL
	Takashi Tanaka	CRL
	Shinobu Machida	Kyoto University
	Tohru Hada	Kyushu University
	Bernard Shizgal	University of British Columbia

2.10.1 Objectives

The principal objective of this theoretical and modeling research is to develop comprehensive theoretical models of the atmosphere and the plasma environment of Mars. Using the models along with data obtained by previous and other ongoing Mars missions, we will estimate various physical parameters and predict physical processes occurring prior to the arrival of PLANET-B at Mars. After the arrival, the models will be further improved by including new data obtained by PLANET-B in order to better understand the Martian environment and the nature of the solar wind-Mars interaction.

2.10.2 Pre-Arrival Research

Numerical modeling is a primary part of this research, although basic theory of the atmospheric and plasma physics is also developed. Thanks to rapid development of computers, it is now possible to construct fairly realistic global models for the upper atmosphere and the solar wind interaction with Mars. Various kinds of numerical models are currently being constructed. In particular, emphasis will be placed on the following numerical modeling:

1) Global MHD modeling of the solar wind interaction with Mars.
2) Hybrid-particle modeling of the solar wind interaction with Mars.
3) Kinetic modeling of the exosphere and the ionosphere.
4) Global modeling of the atmosphere and the ionosphere.
5) Photochemical modeling of the atmosphere and ionosphere.

Using these models and the data obtained by the previous observations, we will make predictions of:

1) Important physical parameters, such as magnetic fields, densities, velocities, and temperatures in the upper atmosphere and in the near-Mars environment,
2) Physical environment of previously unexplored regions, such as the subsolar region and the midnight region in the ionosphere, and
3) Variations of the upper atmosphere, the ionosphere, and the magnetosphere associated with the solar wind, the solar radiation, and lower atmospheric processes.

Some of the prediction models have been already developed, and have been published in papers of scientific journals. The models are being improved by considering data obtained by recent spacecraft such as the Mars Pathfinder and the Mars Global Surveyor.

2.10.3 Post-Arrival Research

PLANET-B will provide us with a variety of data primarily of the upper atmosphere, the ionosphere, the magnetosphere, and the solar wind. The models developed in the pre-arrival period will be further improved by including the new data. By comparing the modeling results with the data, we will be able to greatly enhance our understanding of physical processes in the Martian environment.

The goal of this post-arrival theoretical research is to resolve the following major problems at Mars:

1) Structure, dynamics and energetics of the upper atmosphere, the ionosphere, and the magnetosphere.
2) Plasma processes associated with the solar wind interaction with Mars.
3) Magnitude of an intrinsic magnetic field at Mars.
4) Distribution of magnetic anomalies in the Mars crust, and effects of crustal magnetic fields on the ionosphere.
5) Thermal and non-thermal escape rates of the Martian atmosphere.
6) Effects of processes in the lower atmosphere, such as dust storms, gravity waves and tidal waves, on the upper atmosphere and the ionosphere.

In addition, the models will provide theoretical interpretation for unforeseen phenomena which might be discovered by PLANET-B.

2.11 Field of View of the Scientific Instruments

Field of view of the scientific instruments are shown in Figure 2.11-1.

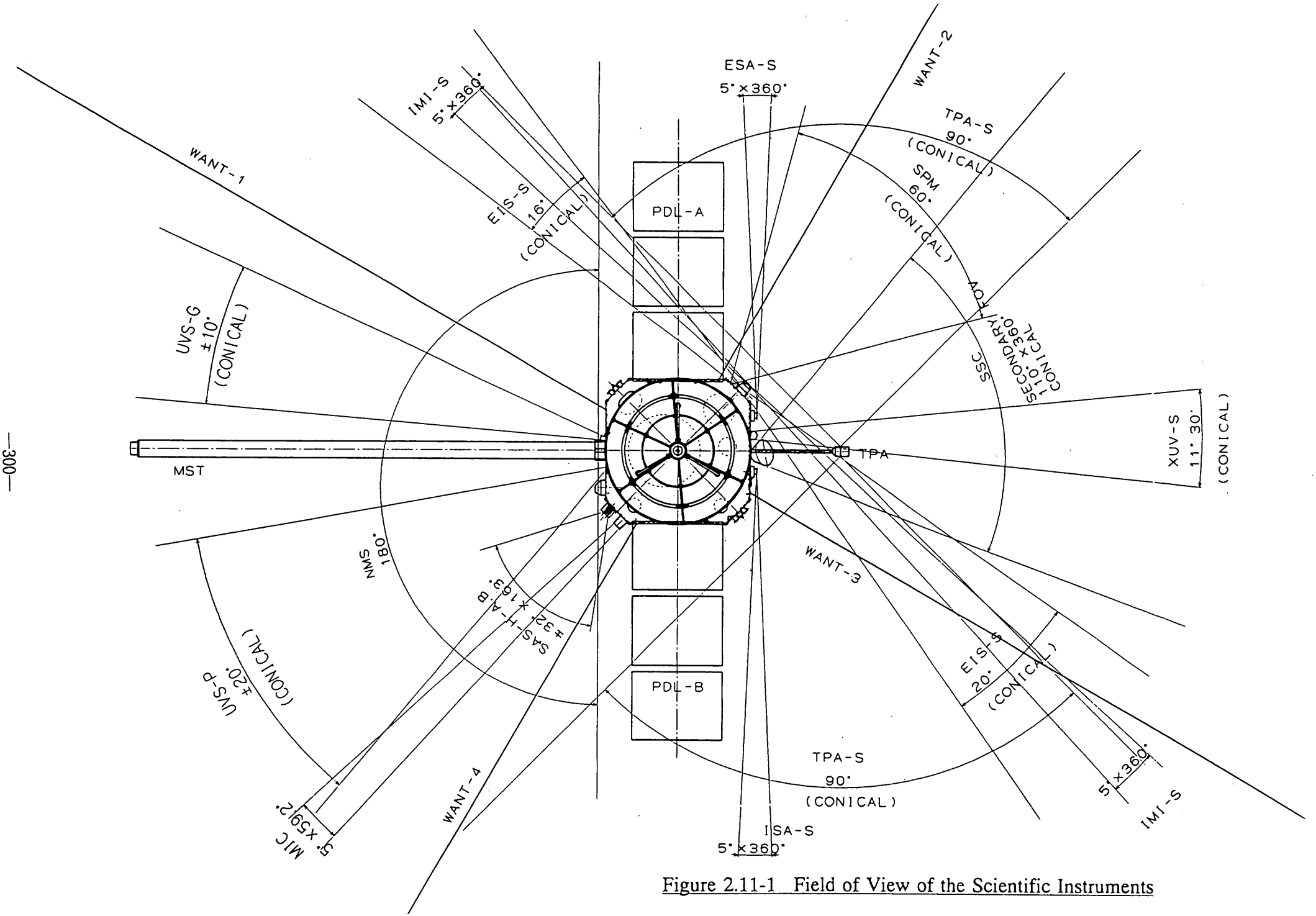

Figure 2.11-1 Field of View of the Scientific Instruments

3. Communications System

T. Takano, T. Yamada, Z. Yamamoto, M. Ichikawa and K. Inoue (ISAS)
NEC Corporation

3.1 Parameters and Performance of the Whole System

3.1.1 TT&C Schemes

3.1.1.1 General

The communications network of the PLANET-B is shown in Fig. 3.1-1. The communications links of the PLANET-B consist of command, telemetry and ranging links in simultaneous transmission scheme in S-band, and telemetry or ranging links in switched transmission scheme in X-band.

Three Ground stations of UDSC, JKSC, and DSN will be used in accordance to communications modes and visibility from the satellite.

The block diagram of the PLANET-B communications system is shown in Fig. 3.1-2. The system consists of S-band low gain antennas (LGA-A and LGA-B), an S/X-band high gain antenna (S/X-HGA), S-band diplexers (SDIP), S-band receivers (SBRs), an S-band transmitter (TMS), an X-band transmitter (TMX) and an X-band power amplifier (XPA).

The major performance of the communications system is summarized in Table 3.1-1. The modulation signal characteristics of the uplink and downlink are shown in Table 3.1-2.

3.1.1.2 Telemetry Subsystem

The telemetry data transmission will be performed through S-band and/or X-band. S-band downlink signal is transmitted by one of the 3 antennas, and X-band downlink signal is transmitted by HGA-X antenna. The major features of the telemetry subsystem are as follows:

(a) All the telemetry data are encoded in a concatenated manner using a Reed-Solomon code as the outer code and a convolutional code as the inner code.

(b) The S-band telemetry data can be sent simultaneously with ranging signal. The X-band telemetry data will be sent independently without ranging signal.

(c) TMS has two transmitter power modes (i.e. High Power mode and Low Power mode). The optimum combination of a transmitter power mode and an antenna should be selected by commanding. It depends upon the altitude of the spacecraft to satisfy the power flux density specification due to the Radio Regulations.

X-band transmitting system will be used for the mission data transmission distance. So, X-band transmission is operated only in High Power mode without Low Power mode.

3.1.1.3 Command Subsystem

(a) A command bit rate should be selected 15.625bps and 125bps, depending upon operational conditions between 15.625bps and 125bps.

(b) The command subsystem can be operated simultaneously with the ranging subsystem.

(c) A command phase modulation index should be selected depending upon operational conditions from the followings:

0.6 rad : commanding alone mode
0.5 rad : commanding & ranging mode.

(d) Two S-band Receivers (SBRs) are connected to two of LGA-A, LGA-B and HGA-S.

(e) The S-band uplink acquisition is achieved by sweeping a non-modulated carrier sent from a tracking station. The tracking range of SBR is fo±50kHz (for -140 - -90dBm), and the frequency sweep rate should be less than 100 Hz/sec (for -140 - -50dBm).

3.1.1.4 Ranging Subsystem

(a) The ranging subsystem operation is performed in either combination of the S-band uplink / S-band downlink, or the S-band uplink / X-band downlink.

(b) The spacecraft transponder can be set to either of coherent or non-coherent mode. Coherent frequency ratios are as follows:

- S-band downlink / S-band uplink = 240/221
- X-band downlink / S-band uplink = 880/221.

(c) Ranging scheme is determined by the equipments at a communicating tracking station. For example, UDSC has a sequential ranging system with clock frequency of approximately 516kHz, and JKSC has a PN code ranging system.

(d) The ranging phase modulation index of S-band uplink should be selected depending upon operational conditions from the followings:

1.2 rad : ranging alone mode
0.7 rad : commanding & ranging mode.

(e) The transponder 3dB bandwidth for the ranging signal is approximately 4MHz.

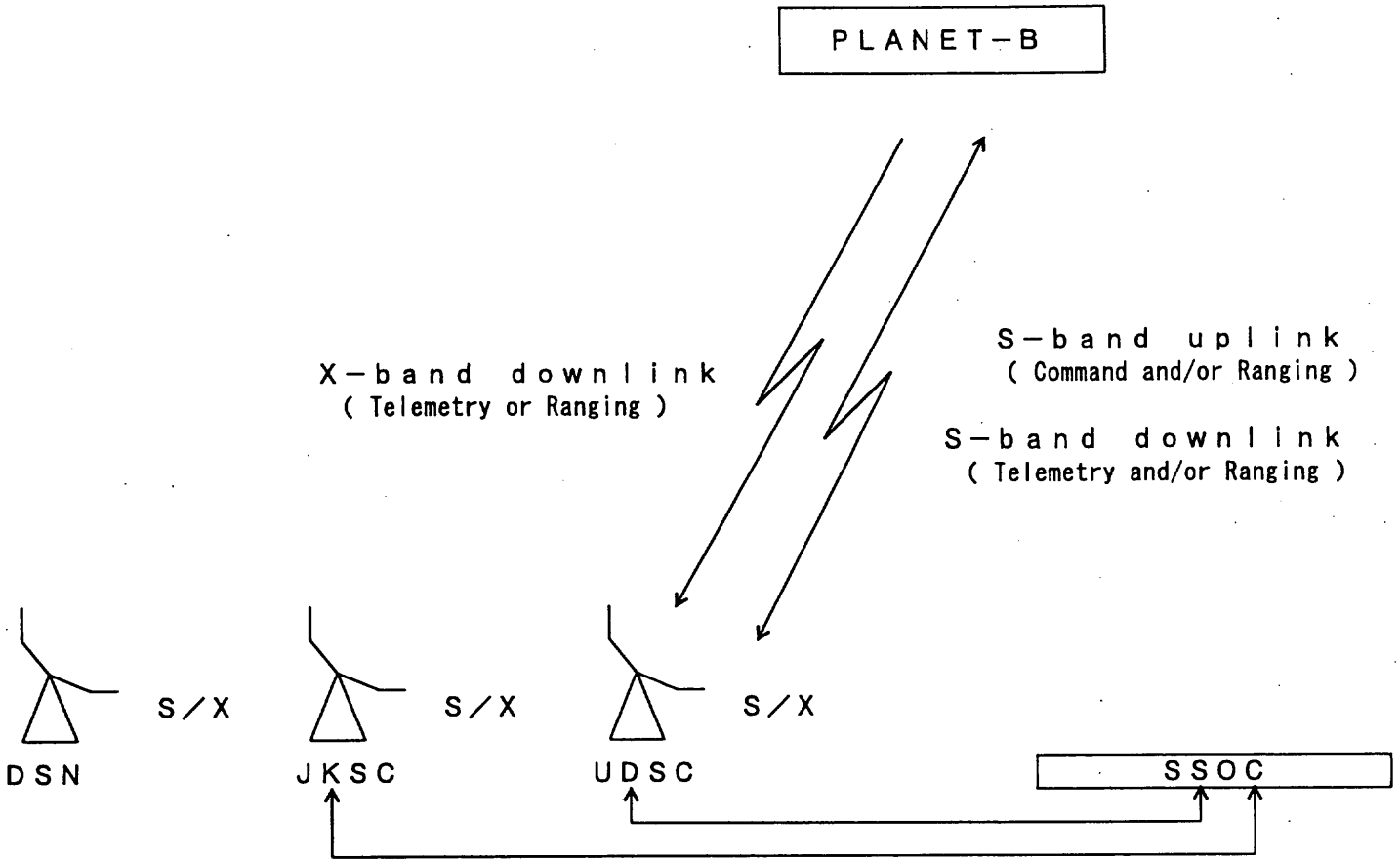

UDSC : Usuda Deep Space Center
JKSC : Kagpshima Space Center
DSN : Deep Space Network
SSOC : Sagamihara Space Operation Center

Fig. 3. 1-1 Communications System for PLANET-B

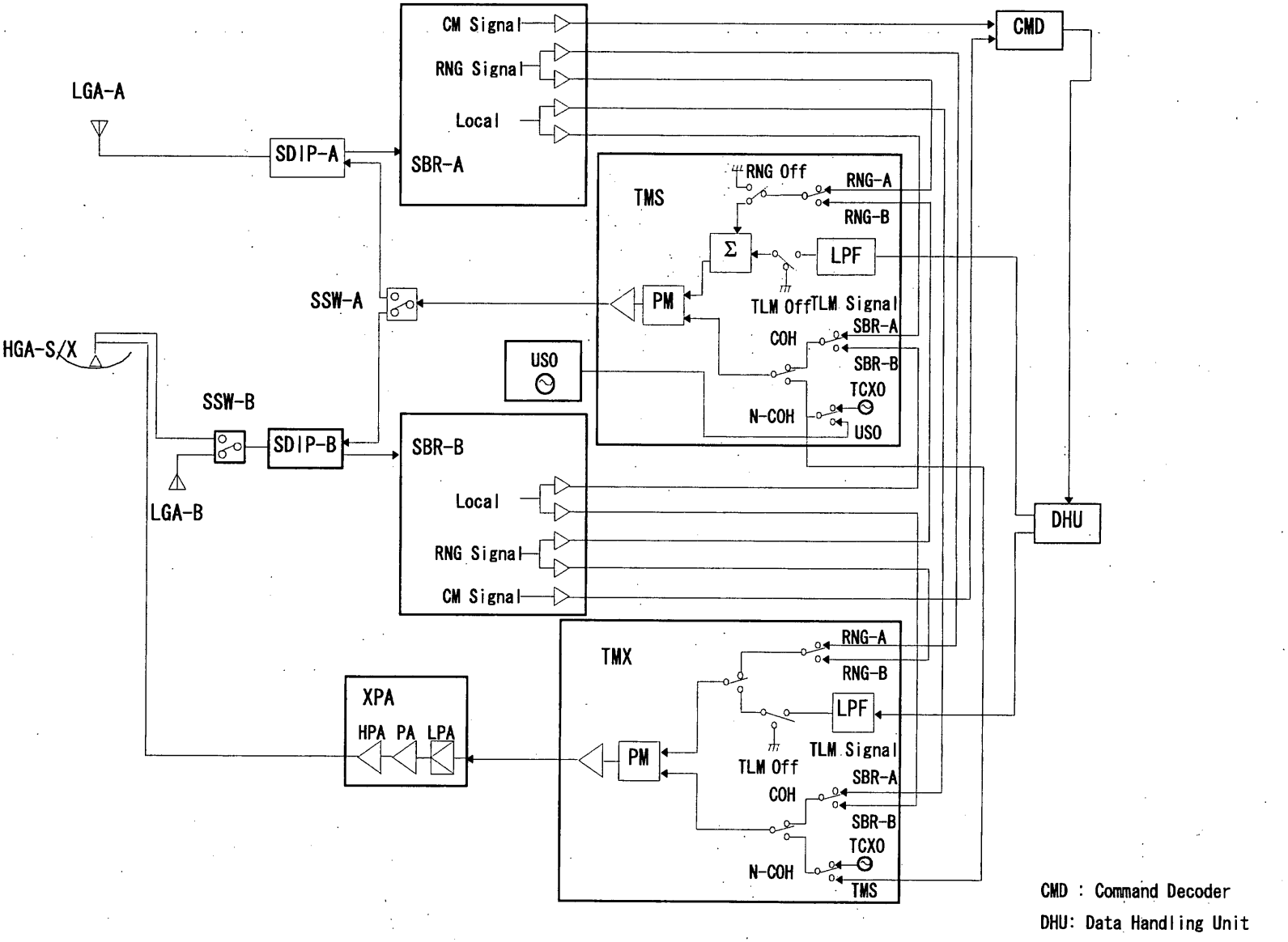

Fig. 3.1-2 Block Diagram of the On-board Communications System

Table 3.1-1 Major Performance of Communications System (1/2)

Component	Performance
S-Band Transmitter (TMS)	Frequency : 2.2GHz (Tx Band) Fup×240/221 RF Output Power : 36.0dBm(4W)±1dB(High) 20dBm(0.1W)±1dB(Low) Signal : Telemetry, Ranging (Refer to Table 3.1-2)
X-Band Transmitter (TMX) & X-Band Power Amplifier (XPA)	Frequency : 8.4GHz (Tx Band) Fup×880/221 RF Output Power : XPA ; ≧37.6dBm(5.8W) TMX ; +12.9dBm±1dB Signal : Telemetry, Ranging (Refer to Table 3.1-2)
S-Band Receiver-A,B (SBR-A、B)	Frequency : 2.1GHz (Rx Band) Signal : Command, Ranging (Refer to Table 3.1-2) Tracking Range : fo±90kHz (-90～-50dBm) : fo±50kHz (-140～-90dBm) Acquisition Sweep Rate : 600Hz/sec (-90～-50dBm) 100Hz/sec (-140～-90dBm) Input Level : -144dBm～-50dBm(Carrier only) Squelch Level : -148dBm±4dB Noise Figure : ≦3dB
S-Band Low Gain Antenna-A (LGA-A)	Frequency : 2.1GHz (Rx Band) : 2.2GHz (Tx Band) Type : Cross Dipole Gain : RX,TX : 0.0dBi min* (±45°) : RX : -15.0dBi min* (±90°) : TX : -12.0dBi min* (±90°) Polarization : RHCP * Measured values
S-Band Low Gain Antenna-B (LGA-B)	Frequency : 2.1GHz (Rx Band) : 2.2GHz (Tx Band) Type : Cross Dipole Gain : RX,TX : 0.0dBi min* (±45°) : RX : -15.0dBi min* (±90°) : TX : -15.0dBi min* (±90°) Polarization : RHCP * Measured values

Table 3.1－1 Major Performance of Communications System (2／2)

Component	Performance
S-Band High Gain Antenna (HGA－S)	Frequency : 2.1GHz (Rx Band) : 2.2GHz (Tx Band) Type : 1.6mφ Parabolic Mesh Antenna Gain/Beam Width : Rx 26.9dBi* (peak)/±2.9° (-3dB) 26.8dBi* (Off beam angle 0.45°) Tx 27.4dBi* (peak)/±2.7° (-3dB) 27.3dBi* (Off beam angle 0.45°) Polarization : RHCP * Measured values
X-Band High Gain Antenna (HGA－X)	Frequency : 8.4GHz (Tx Band) Type : 1.6mφ Parabolic Mesh Antenna Gain/Beam Width : Tx 38.4dBi* (peak)/±0.75° (-3dB) 37.2dBi* (Off beam angle 0.45°) Polarization : RHCP * Measured values

* Detailed frequency of 2.1GHz in RX band is . MHz.
Detailed frequency of 2.2GHz in TX band is . MHz.
Detailed frequency of 8.4GHz in TX band is . MHz.

Table 3.1-2 Modulation Signals

Link	Band	Signal	Bit Rate	Modulation Form	Subcarrier Frequency	Modulation Index	Coding / BER
Up	S	Command	15.625bps / 125bps	PCM-PSK-PM	4000Hz (Sinewave)	0.6 rad (Commanding alone) 0.5 rad (Commanding & Ranging)	
		Ranging	Clock Freq. ≒516kHz (Squarewave)	Tone-PM	———	1.2 rad (Ranging alone) 0.7 rad (Commanding & Ranging)	
Down	S	Telemetry	64bps～1024bps ＊1	PCM-PSK-PM	8192Hz (Squarewave)	0.83 rad±7%	Concatenated coding {Reed-solomon code + Convolutional code} BER=1×10^{-5}
			2048bps～32768bps	PCM-PM	———	0.83 rad±7%	
		Ranging	Clock Freq. ≒516kHz (Squarewave)	Tone-PM	———	0.65 rad±0.05rad	
	X	Telemetry	64bps～1024bps	PCM-PSK-PM	8192Hz (Squarewave)	1.28 rad±7%	Concatenated coding {Reed-solomon code + Convolutional code} BER=1×10^{-5}
			2048bps～32768bps	PCM-PM	———	1.28 rad±7%	
		Ranging	Clock Freq. ≒516kHz (Squarewave)	Tone-PM	———	0.9 rad±0.1rad	

＊1 The 64bps - 1024bps S-band telemetry will be able to sent simultaneously with ranging signal.

3.1.2 Spacecraft Segments

3.1.2.1 Coverages of PLANET-B Antennas

The PLANET-B antenna coverages are shown in Fig. 3.1-3. The antenna subsystem consists of an S-band High Gain Antenna(HGA-S), an X-band High Gain Antenna(HGA-X) and S-band Low Gain Antennas (S-band LGA-A and B). The S-band and X-band HGA are directed to the earth. The radiation patterns of the LGA-A and -B cover the upper-side and the lower-side of the spacecraft, respectively.

3.1.2.2 EIRP and G/T of PLANET-B

The EIRP and G/T of the PLANET-B are shown in Table 3.1-3.
Details of the test data of circuit losses are shown in Table 3.1-4.

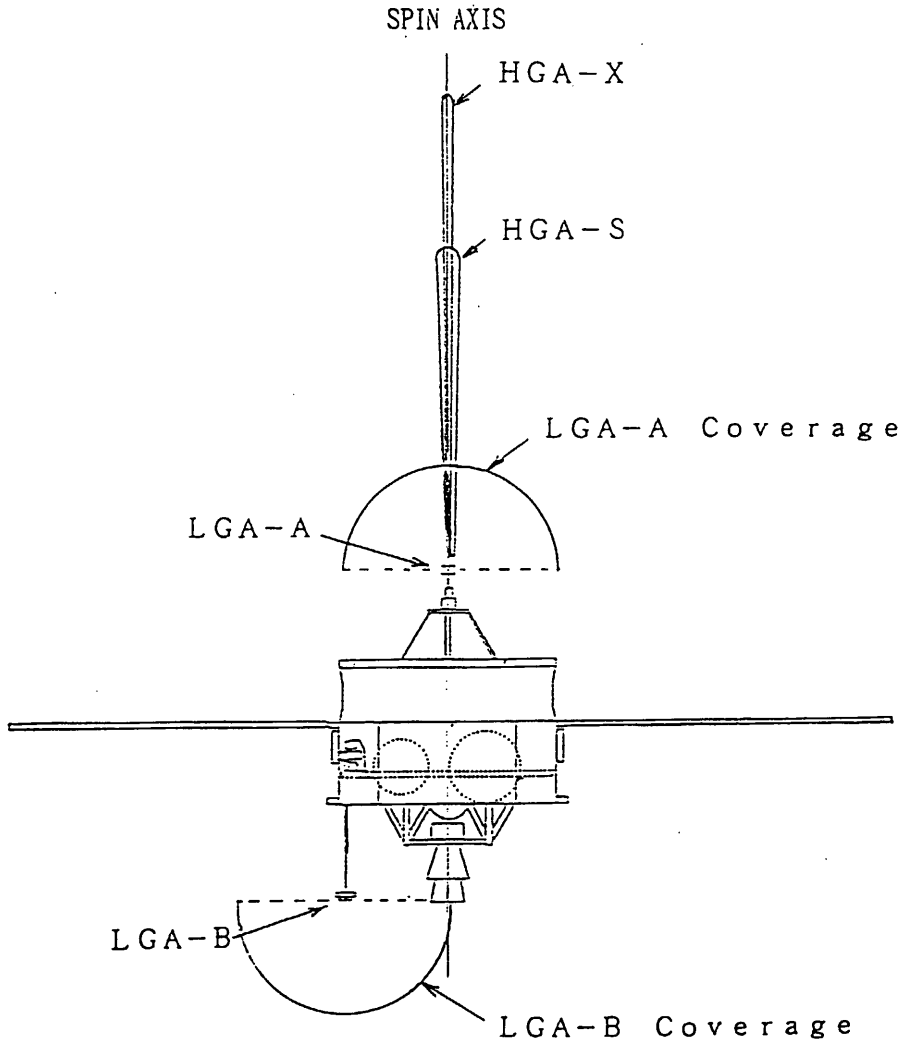

Fig. 3. 1-3 Coverages of PLANET-B Antennas

Table 3.1-3 PLANET-B EIRP and G/T

Parameter		S-band			X-band
		LGA-A	LGA-B	HGA-S	HGA-X
Uplink G/T	Antenna Gain (dBi)	0.0 (±45 °)	0.0 (±45 °)	26.9 *2 (Peak)	
	System Noise Temperature (dBK) Receiver NF (dB) Circuit Loss (dB) Antenna Noise Temperature (K)	25.7 3.0 1.4 *3 5 (>430,000km)	26.6 3.0 3.6 *3 5 (>430,000km)	26.0 3.0 2.0 *3 5 (>0.1AU)	
	G/T (dB/K)	-27.1	-30.2	-1.1	
Downlink EIRP	RF Output Power (dBm)	36.0±1 (4W)	36.0±1 (4W)	36.0±1 (4W)	37.6 (5.8W)
	Ciruit Loss (dB)	2.2 *3	4.1 *3	2.4 *3	—— *1
	Antenna Gain (dBi)	0.0 (±45 °)	0.0 (±45 °)	27.4 *2 (PeaK)	38.4 *2 (Peak)
	EIRP (dBm)	32.8	30.9	60.0	76.0

Note :
* 1 Included in Antenna Gain
* 2 PM Test Data (1996.12)
* 3 Test Data (1997.7)

Table 3.1-4 Test Data of Circuit Losses in S-Band

Antenna / RX or TX		LGA-A		LGA-B		HGA-S	
		RX	TX	RX	TX	RX	TX
Coaxial Cable	dB	0.67 (0.9m)	1.20 (1.8m)	2.80 (4.6m)	2.99 (4.7m)	1.17 (2.0m)	1.28 (2.1m)
SSW-A	dB	—	0.11	—	0.11	—	0.11
SDIP	dB	0.70	0.90	0.70	0.90	0.70	0.90
SSW-B	dB	—	—	0.09	0.10	0.09	0.10
Total	dB	1.4	2.2	3.6	4.1	2.0	2.4

3. 1. 3 Ground Segments

3.1.3.1 Operations

A ground segment of the communications system to be used depends on an operation mode.

(1) In Normal Operation

UDSC is used in normal operation mode. The real-time and the reproduced telemetry data are obtained in S-band and X-band. The commanding should be operated in S-band. The ranging should be operated in the S-band uplink / S-band downlink, or the S-band uplink / X-band downlink.
To receive 32kbps telemetry at UDSC, the receive-only configuration will be adopted in X-band at the farthest distance between PLANET-B and the earth.

(2) In Emergency Operation

In the case of a failure of UDSC, the remaining tracking station of JKSC will be used. The bit rate will be reduced according to the difference of G/T.

(3) JKSC Operation

JKSC will be used for sending command with UDSC in receive-only mode, and for back-up in the emergency case of UDSC.

(4) DSN Operation

DSN will be used in launching phase and during LOS time from Japanese ground stations in receive-only mode.

3.1.3.2 EIRP and G/T of Tracking Stations

The EIRP and G/T of three ground tracking stations are shown in Table 3.1-5.
RF characteristics are based on measured data except the increase of system noise temperature due to the elevation angle decrease and the rain loss.

Table 3.1−5 Ground Stations EIRP & G/T

Earth Station		UDSC (Usuda 64mφ)		JKSC (Kagoshima 34mφ)		DSN (34mφ Tracking antenna)	
Frequency Band		S	X	S	X	S	X
UP LINK (EIRP)	Frquency (MHz)	2025-2120		2025-2120		2025.8-2108.7*	
	Trans. Power (dBm)	53 or 63 or 73 200W 2kW 20kW		50 or 60 or 70 100W 1kW 10kW		73.0 +0.0,-1.0 Saturated drive	
	Power Stab. (dB)	———		———		-0.2±0.05	
	Feeder Loss (dB)	0.9		0.5		Included in A.G	
	Ant. Gain (dBi)	61.6 (2120MHz) 61.4 (2080MHz)		55.6 (2110MHz)		56.22±0.2 at 2120 MHz	
	EIRP (dBm)	113.7 or 123.7 or133.7(2120MHz)		105.1 or 115.1 or125.1(2110MHz)		129.0 +0.0,-1.0 (EL=45°)	
	Polarization	RHCP		RHCP or LHCP		RHCP or LHCP	
DOWN LINK (G/T)	Frequency (MHz)	2200-2300	8400-8500	2200-2300	8400-8500	2200-2300	8400-8500
	Ant. Gain (dBi)	61.6* (2300MHz)	70.6* (8500MHz)	56.3 (2290MHz)	66.9 (8400MHz)	56.85 ** diplexed	68.15 ** diplexed
	Ant.Noise Temp. (K)	40.1* at EL=90°	26.8* at EL=90°	35 at EL=90°	50 at EL=90°	———	———
	Receiver Noise Temp. (K)	35.0	54.4	35	50	———	———
	System Noise Temp. (K)	75.1* at zenith	81.2* at zenith	70 at zenith	100 at zenith	41.3 ** at zenith	34.45 ** at zenith
	Sys.Temp.Increase due to Ant.EL (K)	7.7 at EL=15° (Measured value)	7.3 at EL=15° (Measured value)	30 at EL=5° (Assumed value)	30 at EL=5° (Assumed value)	18.25 at EL=6° ***	22.0 at EL=6° ***
	Ant.Noise Increase due to Rain (K)	———	34 due to 0.6dB rain loss	———	117 due to 2.6dB rain loss	———	6.4 due to0.1dB*** rain loss
	G/T (dB/K)	42.4* at EL=15°	49.7* at EL=15°	36.3 at EL=5°	43.0 at EL=5°	39.1 at EL=6°	50.2 at EL=6°
	Polarization	RHCP	RHCP	Diversity	Diversity	RHCP or LHCP	RHCP or LHCP
Remarks		* Values for common use of S and X-band				* Coh.with earth orbiter D/L allocation ** MODE S/X, Vol. II *** DSN HANDBOOK 810-5, Rev.D;Vol. II	

Note 1) DSN characteristics are based on Fax(Planet-B Spacecraft) from JPL(Warren L.Martin) on March 24, 1995.

3. 2 Link Analysis

3.2.1 Conditions for the Analysis

(1) The spacecraft orbit

The spacecraft orbit consists of the following phases:

(a) Trans-Lunar Phase (S/C Attitude : Solar Pointing [Except for ΔV periods])
(4 months)
Orbit : 1000km×400,000km(11 days)
Apogee 1.71Mkm(Between 1st & 2nd Swing-by)

(b) Trans-Mars Phase
- Phase 1 (S/C Attitude : Solar Pointing) (75 days)
  Earth Range : 7288km→15Mkm
- Phase 2 (S/C Attitude : Earth Pointing) (7 months)
  Earth Range : 15Mkm→1.7AU(250Mkm)

(c) Planet Mars Phase (S/C Attitude : Earth Pointing) (2 years)
Orbit : 150km×14RM(Altitude)
Earth Range : 0.5AU(70Mkm)→2.6AU(392Mkm)

The apogee (2.6AU) of Planet Mars Phase is the farthest distance assumed for link calculations.

(2) EIRP and G/T of PLANET-B

Refer to 3.1.2.2.

(3) EIRP and G/T of ground stations

Refer to 3.1.3.2.

(4) Required C/No

The required C/No for the S-band uplink is shown in Table 3.2-1.
The required C/No for the S-band and X-band downlinks are shown in Table 3.2-2 and Table 3.2-3.

Table 3.2-1 Required C/No for S-band Uplink

Signal Name	Uplink			
	S-Band			
	Command		Ranging	Carrier
Modulation Form	PCM-PSK-PM	PCM-PSK-PM	Tone-PM	———
Bite Rate	15.625bps	125bps	516kHz	———
Modulating	Sinewave sub-carrier of 4kHz	Sinewave sub-carrier of 4kHz	Squarewave	———
Modulation Index (rad)	0.6	[0.5]*1	1.2 [0.7]*2	———
Modulation Loss (dB)	7.84	[11.63]*1	———	0.80 (Command) [2.88]*1
Band Width, Bite Rate (dB·Hz)	11.94	20.97	———	16.02 (2BL=40Hz)
Hardware Loss (dB)	2.0	2.0	———	0.0
Required S/N (dB)	9.6 (BER=1×10^{-5})	9.6 (BER=1×10^{-5})	———	13.50
Required C/No (dB·Hz)	31.4	[44.2]*1	———	30.3 [32.4]*1

Note :
* 1 Values for simultaneous operation with ranging
* 2 Values for simultaneous operation with command

Table 3.2-2 Required C/No for S-band Downlink

Signal Name	Downlink				
	Telemetry		Ranging	Carrier	
Modulation Form	PCM-PSK-PM	PCM-PM	Tone-PM	———	
Bite Rate	64bps～1024bps	2048bps～32768bps	516kHz	———	
Modulating	Squarewave sub-carrier of 8192Hz	Squarewave	Squarewave	———	
Modulation Index (rad)	0.83±7%	0.83±7%	0.65±0.05	———	
Modulation Loss (dB)	4.04 [6.37]*1	4.04	ML	[6.33]*1	
Band Width, Bite Rate (dB·Hz)	18.06～30.10	33.11～45.15	0.0	10.0 (2BL=10Hz)	4.77 (2BL=3Hz)
Hardware Loss (dB)	2.5	2.5	———	0.0	0.0
Required Eb/No, S/N (dB)	2.8 *2 (BER 1×1 0^{-5})	2.8 *2 (BER 1×10^{-5})	9.0 (Threshold)	13.5	13.5
Required C/No (dB·Hz)	27.4～39.4 [29.7～41.8]*1	42.5～54.5	9.0+ML	[29.8]*1	[24.6]*1

Note :

* 1 Square brackets represent the values for simultaneous operation with ranging.
* 2 Concatenated coding (Reed-solomon code + Convolutional code)

Table 3.2-3 Required C/No for X-band Downlink

Signal Name	Downlink				
	Telemetry		Ranging	Carrier	
Modulation Form	PCM-PSK-PM	PCM-PM	Tone-PM	———	
Bite Rate	64bps～1024bps	2048bps ～ 32768bps	516kHz	———	
Modulating	Squarewave sub-carrier of 8192Hz	Squarewave	Squarewave	———	
Modulation Index (rad)	1.28±7%	1.28±7%	0.9±0.1	———	
Modulation Loss (dB)	1.56	1.56	ML	14.0 (Telemetry)	
Band Width, Bite Rate (dB·Hz)	18.06～30.10	33.11～45.15	0.0	10.0 (2BL=10Hz)	4.77 (2BL=3Hz)
Hardware Loss (dB)	2.5	2.5	———	0.0	0.0
Required Eb/No, S/N (dB)	2.8 *1 (BER 1×10^{-5})	2.8 *1 (BER 1×10^{-5})	9.0 (Threshold)	13.5	13.5
Required C/No (dB·Hz)	24.9～37.0	40.0～52.0	9.0+ML	37.5	32.3

Note :
* 1 Concatenated coding (Reed-solomon code + Convolutional code)

3.2.2 Results of Link Calculations

The summary of link margins is shown in Teble 3.2-4.

At the distance of 2.6AU, commanding with 15.625bps is capable with the margin of 2.7dB using LGA-A in S-band. Telemetry with 1024bps will be pursued with the margin of 2.2dB using HGA-X in X-band. Ranging using HGA-S for the uplink and HGA-X for the downlink has sufficient margin of 15.5dB.

Examples of link calculation are shown in Table 3.2-5, 3.2-6, 3.2-7, 3.2-8, 3.2-9 and 3.2-10 for command in S-band, telemetry in S-band and X-band, Ranging in S/S-band and S/X-band.

The characteristics of telemetry bit rate vs slant range is shown in Fig.3.2-1, and ranging link margin vs slant range are shown in Fig. 3.2-2.

The estimated receiving power dynamic range is shown in Table 3.2-11.

Table 3.2-4 PLANET-B Link Margin Summary

Signal Name	Slant Range	S/C Antenna	Bite rate	Link Margin	Remarks
Command	1.71×10^{6}km	LGA-B (±90°)	125bps	(19.0 dB) *1	
	2.6AU	LGA-A (±45°)	15.625bps	2.7 dB	Refer to Table 3.2-5
		HGA-S	125bps	(15.8 dB) *1	Refer to Table 3.2-6
Telemetry (S-band)	2.6AU	HGA-S	64bps	1.6 dB (-0.7 dB) *1	Refer to Table 3.2-7 Refer to Fig.3.2-1
Telemetry (X-band)	2.6AU	HGA-X	1024bps	2.2 dB	Refer to Table 3.2-8 Refer to Fig.3.2-1
			2048bps	-0.8 dB	
Ranging	2.6AU	HGA-S /HGA-S	——	[-0.2 dB] *2	Refer to Table 3.2-9 Refer to Fig.3.2-2
	2.6AU	HGA-S /HGA-X	——	15.5 dB	Refer to Table 3.2-10

Note :
* 1 Values for simultaneous operation with Ranging
* 2 Values for simultaneous operation with Command and Telemetry

Table 3.2-5 PLANET-B S-Band CMD Link at UDSC
(S/C ANT : LGA-A)

PARAMETER	UNIT	UP LINK	REMARKS
Frequency	MHz		
Transmit. Power	dBm	73.0 -	20kW
Transmit. Feedr Loss	dB	0.9 61.	
Transmit. ANT GAIN	dBi	6	64m
EIRP	dBm	133.7	
Transmit. Point. Loss	dB	-0.1	
Polarization Loss	dB	-0.1	
Space Loss	dB	-270.8	2.1GHz, 392E+6 km(2.6AU)
Absorb. + Rain Loss	dB	-0.1	
Receiv. Point. Loss	dB	---	
Receiv. Ant. Gain	dBi	0.0	LGA-A ±45deg, Test Data
Receiv. Feedr Loss	dB	-1.4	Test Data
Receiv. Signal Power	dBm	-138.8	Squelch Level: -144dBm
Noise Power Density	dBm/Hz	-172.9	
System Noise temp.	K	372.2	Ta : 5 K
G/T	dB/K	-27.1	NF : 3 dB
C/No	dB·Hz	34.1	

MODEM PARAMETER		CMD 15.625 bps		CARRIER
Mod. Index	rad	0.6 ~ 0.6		---
Mod. Loss	dB	7.8		0.8
Hardware Loss	dB	2.0		---
Band width	dB·Hz	11.9		16.0
Required Eb/No, S/N	dB	9.6		13.5
Required C/No	dB·Hz	31.4		30.3
MARGIN	dB	2.7		3.8

NOTE 1) CMD BER=10E-5

Table 3.2-6 PLANET-B S-Band CMD Link at UDSC
(S/C ANT : HGA-S)

PARAMETER	UNIT	UP LINK	REMARKS
Frequency	MHz		
Transmit. Power	dBm	73.0	20kW
Transmit. Feedr Loss	dB	-0.9	
Transmit. ANT GAIN	dBi	61.6	64m
EIRP	dBm	133.7	
Transmit. Point. Loss	dB	-0.1	
Polarization Loss	dB	-0.1	
Space Loss	dB	-270.8	2.1GHz, 392E+6 km(2.6AU)
Absorb. + Rain Loss	dB	-0.1	
Receiv. Point. Loss	dB	-0.1	±0.45deg
Receiv. Ant. Gain	dBi	26.9	HGA-S (PM Test Data)
Receiv. Feedr Loss	dB	-2.0	Test Data
Receiv. Signal Power	dBm	-112.6	Squelch Level: -144dBm
Noise Power Density	dBm/Hz	-172.6	
System Noise temp.	K	398.8	Ta : 5 K
G/T	dB/K	-1.1	NF : 3 dB
C/No	dB·Hz	60.0	

MODEM PARAMETER		CMD 125 bps	RANGE	CARRIER (CMD+RNG)
Mod. Index	rad	0.5 ~ 0.5	0.7 ~ 0.7	---
Mod. Loss	dB	11.6	---	2.9
Hardware Loss	dB	2.0	---	---
Band width	dB·Hz	21.0	---	16.0
Required Eb/No, S/N	dB	9.6	---	13.5
Required C/No	dB·Hz	44.2	---	32.4
MARGIN	dB	15.8	---	27.6

NOTE 1) SIMULTANEOUS CMD AND RANGE IS EMPLOIED
2) CMD BER=10E-5

Table 3.2-7 PLANET-B S-BAND TLM LINK at UDSC
(S/C : HGA-S)

PARAMETER	UNIT	DOWN LINK	REMARKS
Frequency	MHz		
Transmit. Power	dBm	35.0	4W±1dB
Transmit. Feedr Loss	dB	-2.4	Test Data
Transmit. ANT GAIN	dBi	27.4	HGA-S, PM Test Data
EIRP	dBm	60.0	
Transmit. Point. Loss	dB	-0.1	±0.45deg
Polarization Loss	dB	-0.1	
Space Loss	dB	-271.5	2.2GHz、 392E+6 km (2.6AU)
Absorb. + Rain Loss	dB	-0.1	
Receiv. Point. Loss	dB	-0.1	
Receiv. Ant. Gain	dBi	61.6	64m
Receiv. Feedr Loss	dB	---	included in Antenna Gain
Receiv. Signal Power	dBm	-150.4	
Noise Power Density	dBm/Hz	-179.4	
System Noise temp.	K	82.8	EL=15deg
G/T	dB/K	42.4	
C/No	dB·Hz	29.0	

MODEM PARAMETER		TLM PCM-PSK-PM 64 bps	TLM(+RNG) PCM-PSK-PM 64 bps	CARRIER	
				(TLM)	(TLM+RNG)
Mod. Index	rad	0.772 ~ 0.888	0.772 ~ 0.888	---	---
Mod. Loss	dB	4.0	6.4	4.0	6.3
Hardware Loss	dB	2.5	2.5	---	---
Band width	dB·Hz	18.1	18.1	10.0	10.0
Required Eb/No, S/N	dB	2.8	2.8	13.5	13.5
Required C/No	dB·Hz	27.4	29.7	27.5	29.8
MARGIN	dB	1.6	-0.7	1.5	-0.8

NOTE 1) 2BL= 10Hz
2) TLM BER=10E-5
3) TLM mod. index= 0.83rad±7%
4) RNG mod. index= 0.7 rad(max)

Table 3.2-8 PLANET-B X-BAND TLM LINK at UDSC
(S/C ANT : HGA-X)

PARAMETER	UNIT	DOWN LINK	REMARKS
Frequency	MHz		
Transmit. Power	dBm	37.6	≧5.8W
Transmit. Feedr Loss	dB	---	included in Antenna Gain
Transmit. ANT GAIN	dBi	38.4	HGA-X, PM Test Data
EIRP	dBm	76.0	
Transmit. Point. Loss	dB	-1.2	±0.45deg
Polarization Loss	dB	-0.1	
Space Loss	dB	-282.8	8.4GHz, 392E+6 km (2.6AU)
Absorb. + Rain Loss	dB	-0.8	
Receiv. Point. Loss	dB	-0.2	
Receiv. Ant. Gain	dBi	70.6	64m
Receiv. Feedr Loss	dB	---	included in Antenna Gain
Receiv. Signal Power	dBm	-138.5	
Noise Power Density	dBm/Hz	-177.7	
System Noise temp.	K	122.5	EL=15deg
G/T	dB/K	49.7	
C/No	dB·Hz	39.2	

MODEM PARAMETER		PCM-PM 2048 bps	PCM-PSK-PM 1024 bps	CARRIER
Mod. Index	rad	1.19 ~ 1.37	1.19 ~ 1.37	---
Mod. Loss	dB	1.6	1.6	14.0
Hardware Loss	dB	2.5	2.5	---
Band width	dB·Hz	33.1	30.1	10.0
Required Eb/No, S/N	dB	2.8	2.8	13.5
Required C/No	dB·Hz	40.0	37.0	37.5
MARGIN	dB	-0.8	2.2	1.7

NOTE 1) 2BL=10Hz
2) TLM BER=10E-5
3) TLM mod. index =1.28rad±7%

Table 3.2-9 PLANET-B S/S-Band RANGE Link at UDSC
(S/C ANT : HGA-S)

PARAMETER	UNIT	UP LINK	DOWN LINK	REMARKS
Frequency	MHz			
Transmit. Power	dBm	73.0	35.0	S/C:4W-1dB
Transmit. Feedr Loss	dB	-0.9	-2.4	S/C:Test Data
Transmit. ANT GAIN	dBi	61.6	27.4	S/C:HGA-S, Test Data
EIRP	dBm	133.7	60.0	
Transmit. Point. Loss	dB	-0.1	-0.1	
Polarization Loss	dB	-0.1	-0.1	
Space Loss	dB	-270.8	-271.5	392E+6 km(2.6AU)
Absorb. + Rain Loss	dB	-0.1	-0.1	
Receiv. Point. Loss	dB	-0.1	-0.1	
Receiv. Ant. Gain	dBi	26.9	61.6	S/C:Test Data
Receiv. Feedr Loss	dB	-2.0	---	S/C:Test Data
Receiv. Signal Power	dBm	-112.6	-150.4	
Noise Power Density	dBm/Hz	-172.6	-179.4	S/C
System Noise temp.	K	398.8	82.8	Ta : 5 K
G/T	dB/K	-1.1	42.4	NF : 3 dB
C/No	dB·Hz	60.0	29.0	

MODEM PARAMETER		UP LINK	DOWN LINK	
Mod. Index	rad	0.7	0.6 ~ 0.7	RARR COP: 0.187 rad
Mod. Loss	dB	5.3	20.3	
Band width	dB·Hz	64.0	0.0	RNG BW : 2.5 MHz
Required S/N	dB	---	9.0	
Required C/No	dB·Hz	---	29.3	
MARGIN	dB	---	-0.2	

NOTE 1) SIMULTANEOUS CMD RANGE AND TLM IS EMPLOIED
CMD mod. index : 0.5 rad (max)
TLM mod. index : 0.888 rad (max)

Table 3.2-10 PLANET-B S/X-Band RANGE Link at UDSC
(S/C ANT : HGA-S / HGA-X)

PARAMETER	UNIT	UP LINK	DOWN LINK	REMARKS
Frequency	MHz			
Transmit. Power	dBm	73.0	37.6	S/C:≧5.8W
Transmit. Feedr Loss	dB	-0.9	---	
Transmit. ANT GAIN	dBi	61.6	38.4	S/C:HGA-X, Test Data
EIRP	dBm	133.7	76.0	
Transmit. Point. Loss	dB	-0.1	-1.2	±0.45deg
Polarization Loss	dB	-0.1	-0.1	
Space Loss	dB	-270.8	-282.8	392E+6 km(2.6AU)
Absorb. + Rain Loss	dB	-0.1	-0.8	
Receiv. Point. Loss	dB	-0.1	-0.2	±0.45deg
Receiv. Ant. Gain	dBi	26.9	70.6	S/C:HGA-X, Test Data
Receiv. Feedr Loss	dB	-2.0	---	S/C:Test Data
Receiv. Signal Power	dBm	-112.6	-138.5	
Noise Power Density	dBm/Hz	-172.6	-177.7	S/C
System Noise temp.	K	398.8	122.5	Ta : 5 K
G/T	dB/K	-1.1	49.7	NF : 3 dB
C/No	dB·Hz	60.0	39.2	

MODEM PARAMETER		UP LINK	DOWN LINK	
Mod. Index	rad	0.7	0.8 ~ 1.0	RARR COP: 0.239 rad
Mod. Loss	dB	5.3	14.7	
Band width	dB·Hz	64.0	0.0	RNG BW = 2.5 MHz
Required S/N	dB	---	9.0	
Required C/No	dB·Hz	---	23.7	
MARGIN	dB	---	15.5	

NOTE 1) SIMULTANEOUS CMD AND RANGE IS EMPLOIED
CMD mod. index : 0.5 rad (max)

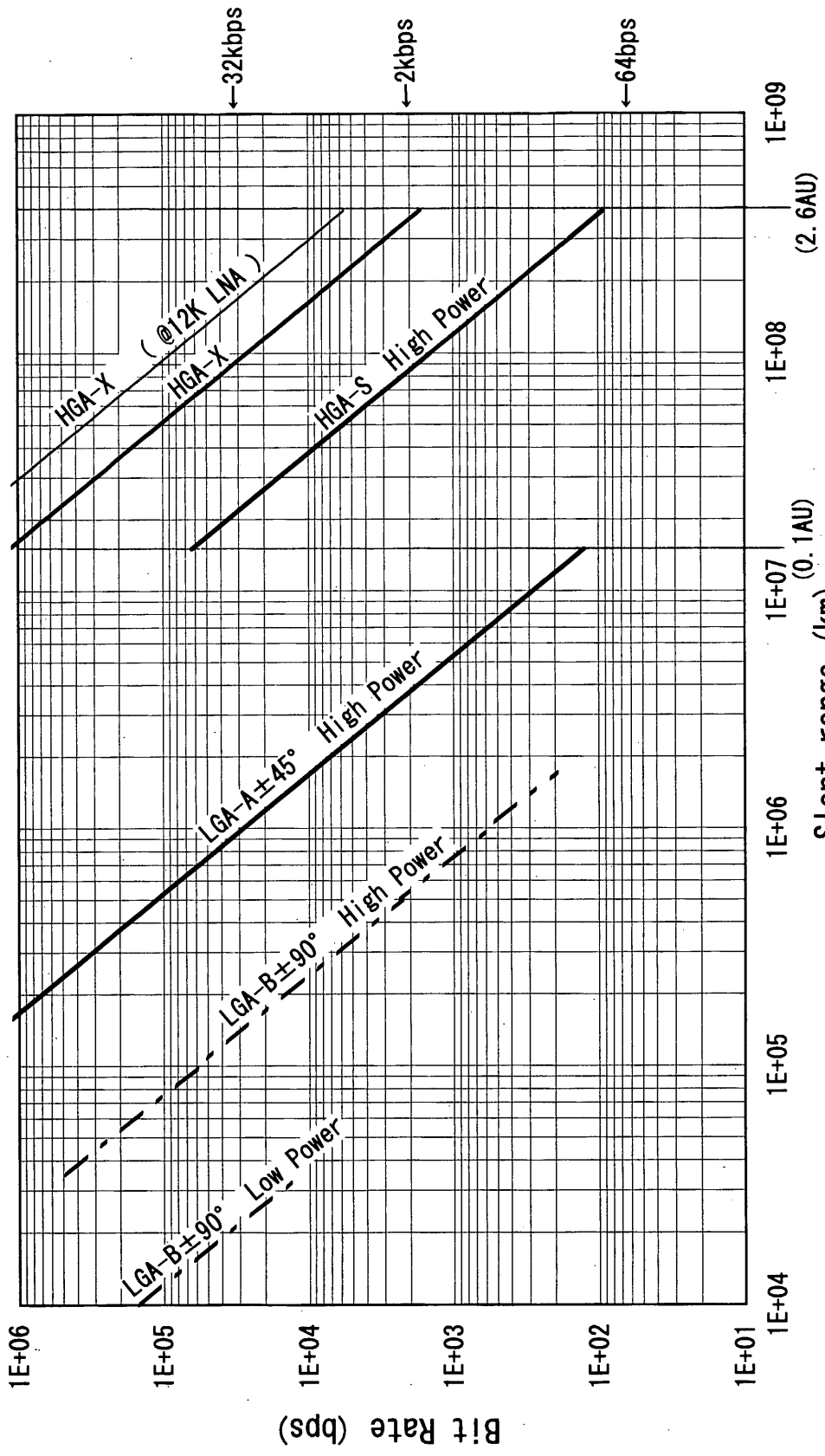

Fig. 3.2-1 Telemetry bit rate vs slant range at UDSC
(Telemetry only)

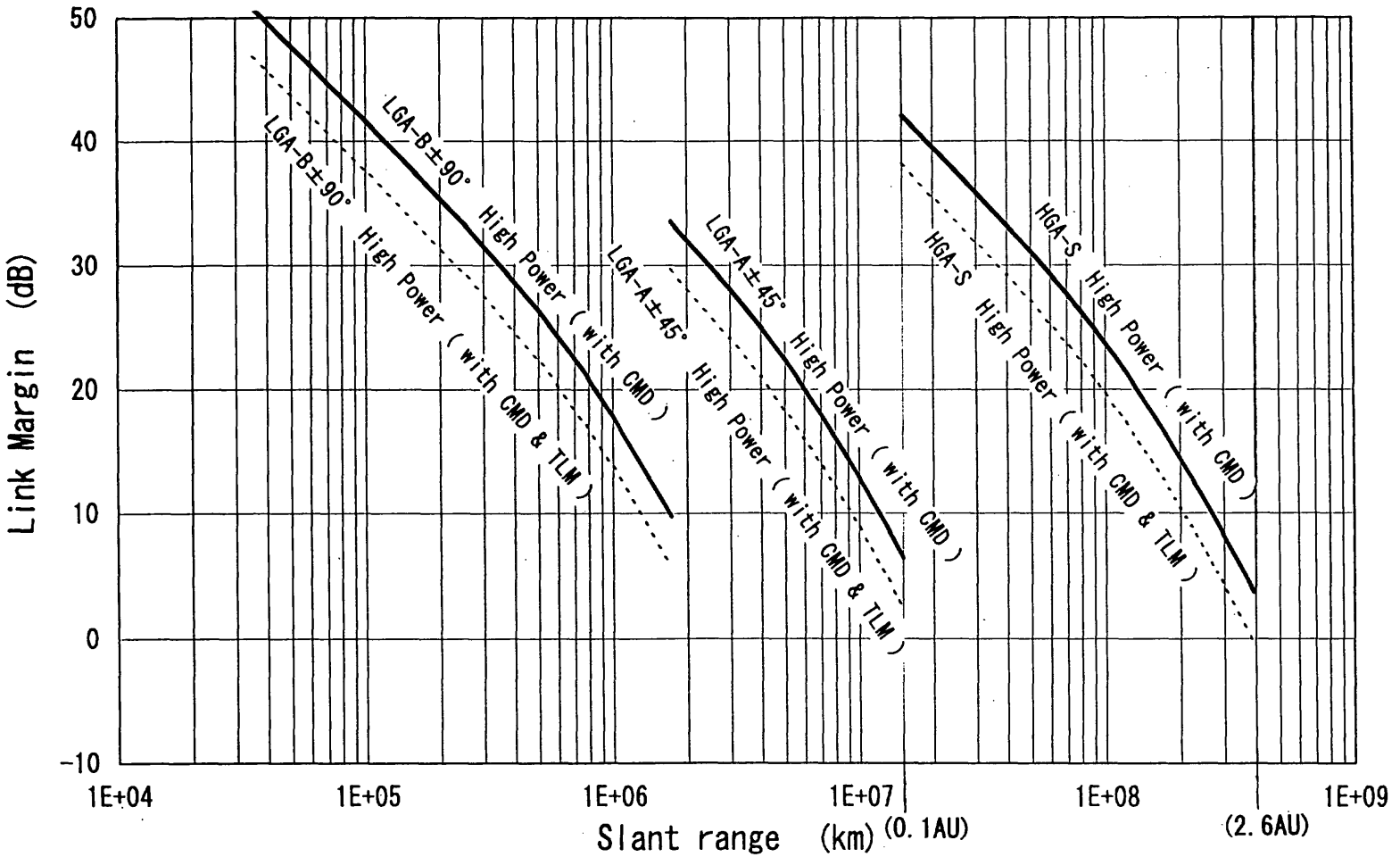

Fig. 3.2-2 RANGE Link margin vs Slant range at UDSC (S/S-band)

Table 3.2-11 SBR Receiving Power Dynamic Range

Prameter		minimum	maximum	Remarks
		(UDSC)	(JKSC)	
GND. Trans. Power	(dBm)	73.0 (20kW)	50.0 (100W)	
GND. Feeder Loss	(dB)	-0.9	-0.5	
GND. Antenna Gain	(dBi)	61.6	51.8	
Free Space Loss	(dB)	-270.8 (2.6AU)	-158.9 (1000km)	$10\log(\lambda/(4\pi R))^2$
Other Loss	(dB)	-0.3	0.0	
PLANET-B Antenna Gain	(dBi)	0.0 (LGA-B)	6.0 (LGA-A)	
PLANET-B feeder Loss	(dB)	-3.6	-1.4	
Received Power	(dBm)	-141.0	-53.0	
Received Power Specification	(dBm)	-144.0	-50.0	

3. 3 Antennas

ISAS Mituru Ichikawa, Yukio Kamata
NEC Corporation Akio Mochizuki, Osamu Amano

The on-board antennas include three antennas:an S- and X-Band high gain antenna (HGA-S/X) and two low gain antennas(LGA-A/B) in S-Band.

Suitable antennas are selected to achieve the requirement of gain(low, high) for the communications.

The block diagram is shown in fig. 3. 3-1.

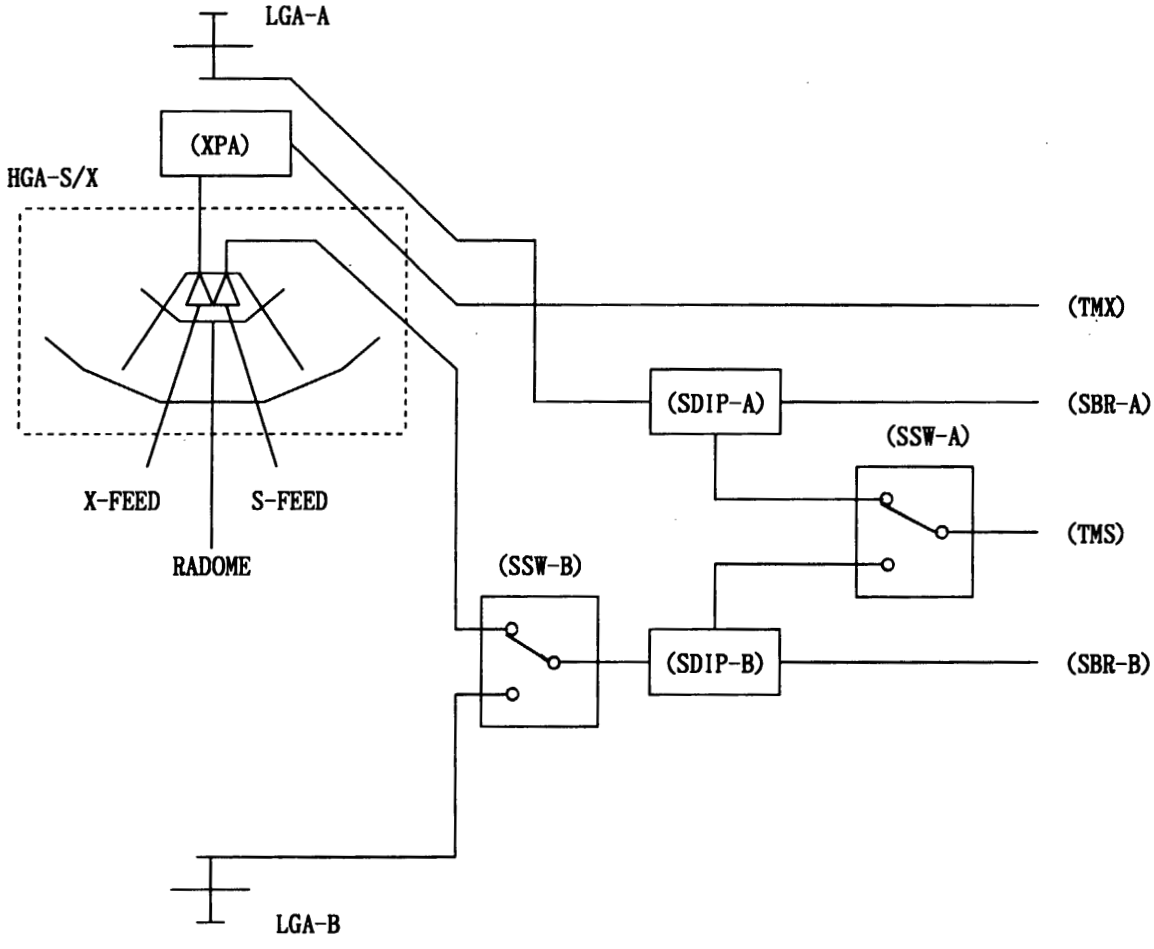

Fig. 3. 3-1 BLOCK DIAGRAM OF ANTENA SUBSYSTEM

3. 3. 1 High Gain Antenna (HGA)

The high gain antenna (HGA) consists of an S-band part (HGA-S) and an X-Band part(HGA-X). The HGA is a center-fed parabolic antenna for S/X co-use. A pencil beam in circular polarization is radiated along the spin axis of the spacecraft. In order to reduce the mass. the reflector is made of the Triaxial Woven Fabric (TWF) , and microstrip type radiators are used for S-Band and X-Band primary feeds.

The radome of the primary feed is coated by the Germanium of 500Å thickness to satisfy the requirement of the conductivity.

The Major performance of the antenna is shown in the table 3.3.1-1.

An outline drawing of HGA-S/X is shown in fig.3.3.1-1.

TABLE 3.3.1-1 MAJOR PERFORMANCE OF HGA-S/X

	S-Band		X-Band
	RECEIVE	TRANSMIT	TRANSMIT
FREQUENCY			
ANTENNA TYPE	CENTER FED PARABOLIC ANTENNA		
APERTURE SIZE	1.6mϕ		
ANTENNA PEAK GAIN	27.1dBi	27.4dBi	38.5dBi
-3dB BEAM WIDTH	±2.7 deg	±2.5 deg	±0.7 deg
POLARIZATION	RHCP		RHCP
IMPEDANCE	50Ω (VSWR=1.5max.)		50Ω (VSWR=1.5max.)
WEIGHT	5.80 kg (INCLUDING XPA & LGA-A)		

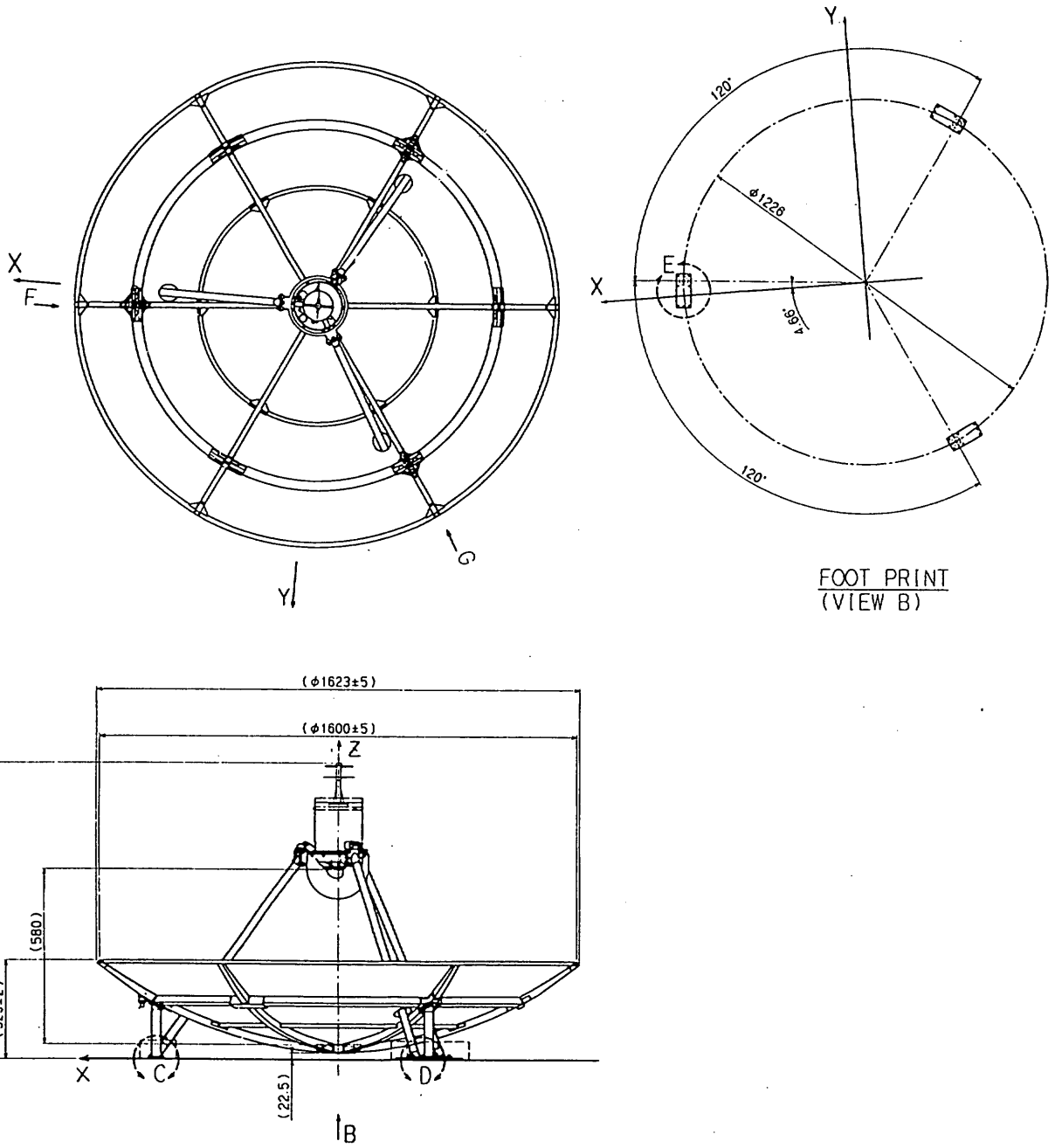

Fig3. 3. 1−1 OUTLINE DRAWING OF HGA

3.3.2 Low Gain Antenna(LGA)

The LGA is a crossed dipole antenna atop a mast mounted parallel to the spin axis on the top of the HGA assembly(LGA-A) and on the aft side of the S/C(LGA-B). Each antenna provides a cardioid radiation pattern with maximum gain in the direction parallel to the antenna mast. These antennas are selected by SSW electrically to cover the whole solid angles from the spacecraft. The outline drawings of the LGA's are shown in figure 3.3.2-1 and figure 3.3.2-2,respectively. And major performance of the antenna is summarized in the table 3.3.2-1.

TABLE 3.3.2-1(1/2) MAJOR PERFORMANCE OF LGA-A

	PERFORMANCE
FREQUENCY	f=2.1GHz(RX) 2.3GHz(TX)
ANTENNA TYPE	CROSSED DIPOLE ANTENNA
ANTENNA GAIN	within the antenna axis ± 45° more than 0 dBi within the antenna axis ± 90° more than -15 dBi(RX) -12 dBi(TX)
POLARIZATION	RHCP
IMPEDANCE	50 Ω (VSWR=1.5max)
WEIGHT	175g

TABLE 3.3.2-1(2/2) MAJOR PERFORMANCE OF LGA-B

	PERFORMANCE
FREQUENCY	f=2.1GHz(RX) 2.3GHz(TX)
ANTENNA TYPE	CROSSED DIPOLE ANTENNA
ANTENNA GAIN	within the antenna axis ± 45° more than 0 dBi within the antenna axis ± 90° more than -15 dBi
POLARIZATION	RHCP
IMPEDANCE	50 Ω (VSWR=1.5max)
WEIGHT	245g

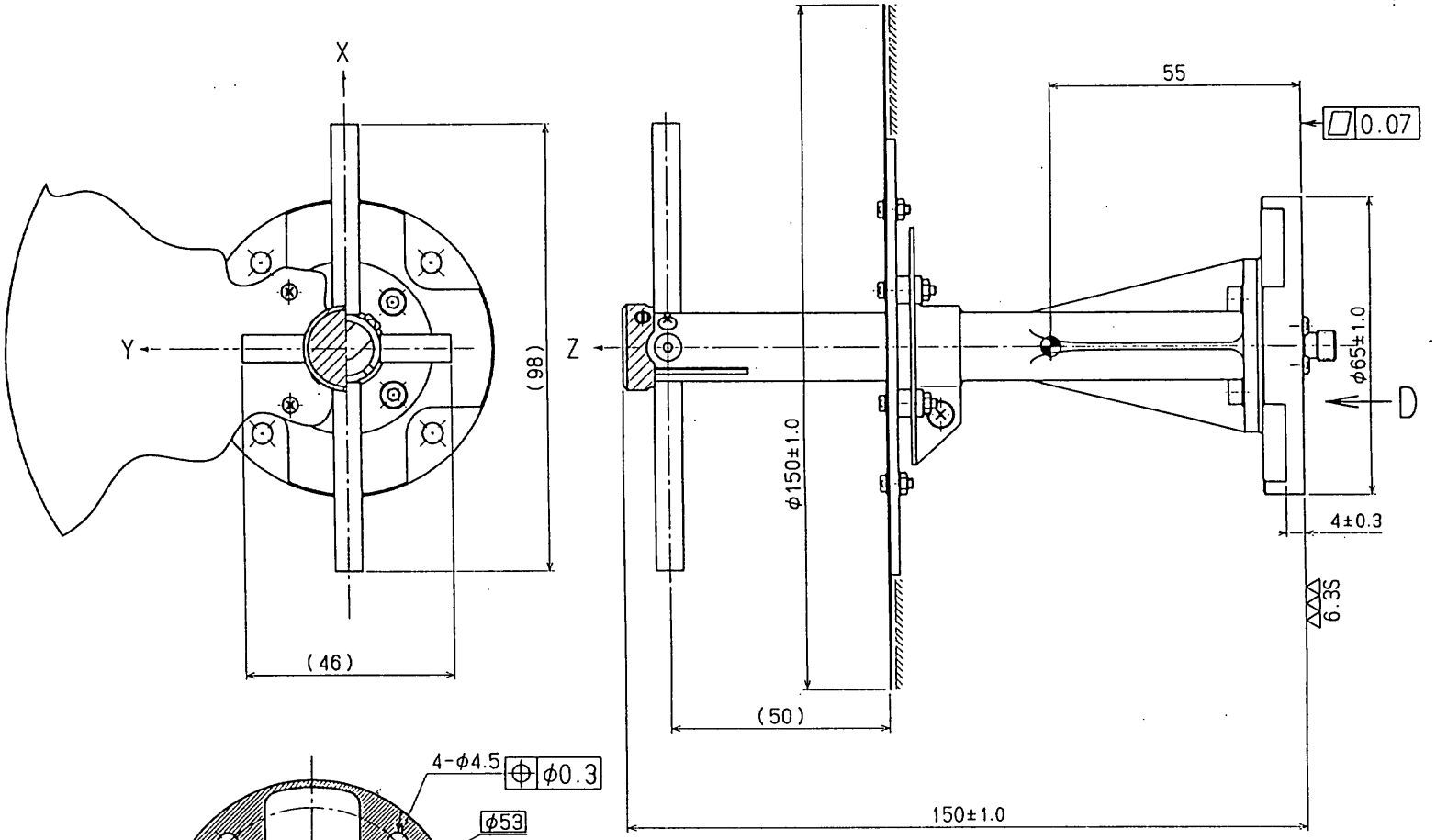

VIEW D

Fig.3.2.2-1(a) OUTLINE DRAWING OF LGA-A

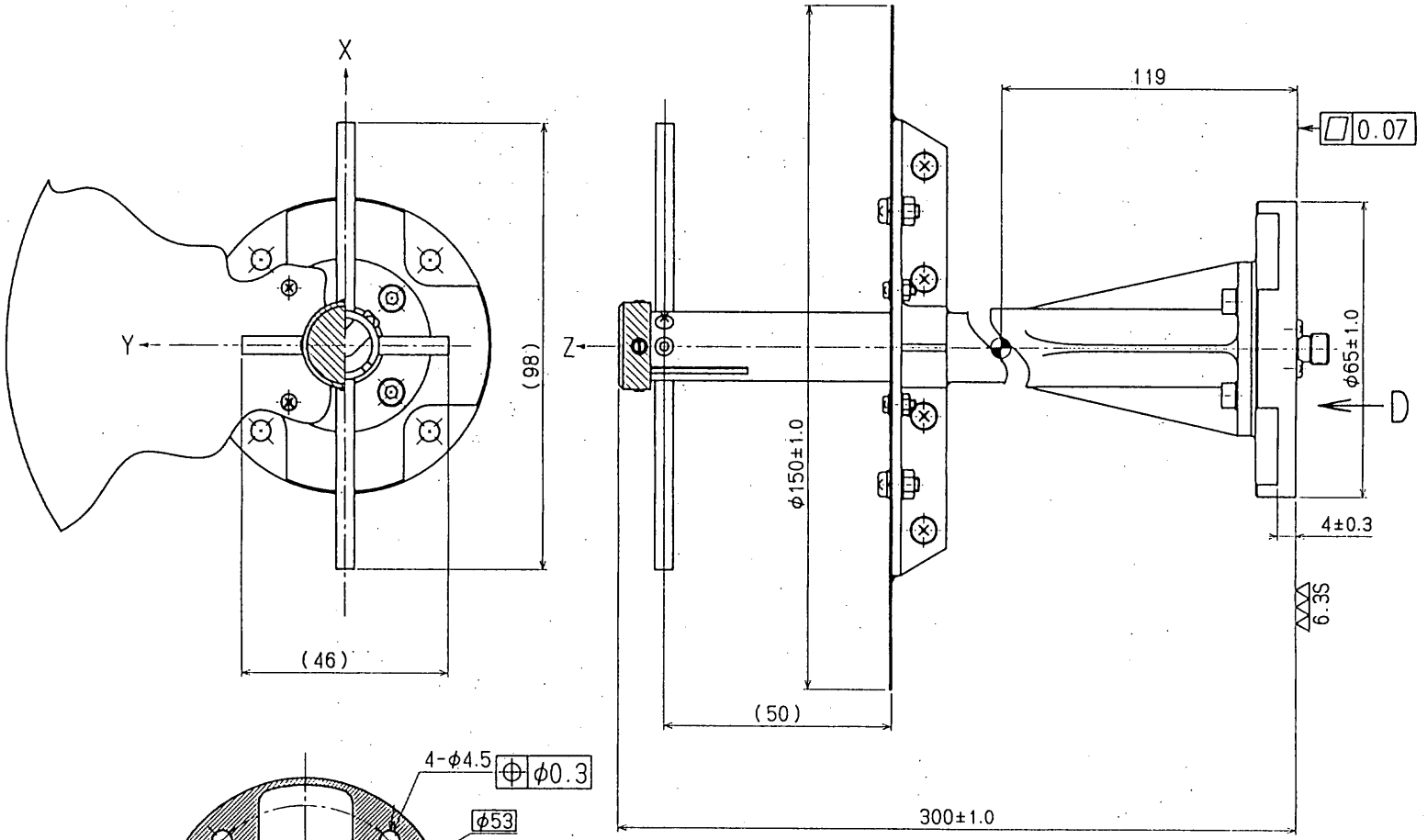

VIEW D

Fig.3.2.2-1(b) OUTLINE DRAWING OF LGA-B

3. 4 Electronic Components

T. Takano, T. Yamada, Z. Yamamoto, M. Ichikawa and K. Inoue (ISAS)
NEC Corporation

3.4.1 S-band Receiver (SBR)

3.4.1.1 General

S-band Receiver (SBR) is a double super-heterodyne receiver, and includes SBR-A and SBR-B. SBR-A and SBR-B receive the S-band up-link signal from the antenna subsystem, and demodulate the command signal and the ranging signal. SBR-A and SBR-B have the same electrical functions and performance, and run independently each other.

3.4.1.2 Functions

The block diagram of SBR-A is shown in Fig. 3.4.1-1. SBR-B's is the same as SBR-A's.

The front-end amplifies the S-band up-link signal with a low noise amplifier, and frequency-converts to the first intermediate frequency (IF) of 105MHz. The 1st IF stage limits the signal bandwidth using a band pass filter and amplifies to a constant level using an automatic gain control (AGC) amplifier, and then frequency-converts to second IF of 21.4MHz.

The 2nd IF stage divides the signal to three channels for command, ranging and carrier tracking.

The command and ranging signals in the 2nd IF are demodulated using phase-detectors. The tracking channel generates the control-voltages for a voltage controlled oscillator (VCO) and the AGC amplifier. Then, the SBR outputs the command baseband signal to Command Decoder (CMD), the ranging signal and the VCO local signal to S-band Transmitter (TMS) and X-band Transmitter (TMX). SBR squelches the command signal within $-148\text{dBm} \pm 4\text{dB}$.

SBR has the status monitors of the VCO control voltage, the AGC voltage, the phase-lock and the squelch status. And SBR has a chassis temperature sensor for house-keeping.

3.4.1.3 Performance

(1)Electrical performance	
(a)Receiving frequency(f0)	
(b)Hold-in range	f0±90kHz min.(-90dBm～-50dBm)
	f0±50kHz min.(-140dBm～-90dBm)
(c)Frequency sweep rate	600Hz/sec max.(-90dBm～-50dBm)
	100Hz/sec max.(-140dBm～-90dBm)
(d)Input level	-144dBm～-50dBm(carrier only)
	-140dBm～-50dBm(with command)
	-135dBm～-50dBm(with ranging)
(e)Squelch level	-148dBm±4dB
(f)Impedance	50Ω VSWR≦1.5
(g)Receiving signals performance	
(i)Command channel	
(1)Modulation form	PCM-PSK-PM
(2)Modulation index	0.6rad0-p
	0.5rad0-p (with ranging)
(3)Subcarrier frequency	4kHz sinewave
(4)Bit rate	15.625bps or 125bps
(5)Output level	0.19Vrms±2dB
	0.16Vrms±2dB (with ranging)
(6)Output impedance	≦200Ω
(ii)Ranging channel	
(1)Modulation form	Tone-PM
(2)Modulation index	1.2rad0-p
	0.7rad0-p (with command)
(3)Tone frequency	≃516kHz squarewave
(4) Output level	1.26Vp-p±5%
	0.62Vp-p±10% (with command)
(5)Output impedance	≦200Ω
(6)Polarity	Inverted
(7)Delay time variation	≦200nsec
(h)Noise figure	≦3dB
(i)3dB bandwidth (at baseband)	
(i)Command channel	6.6kHz±1kHz
(ii)Ranging channel	1.9MHz～2.5MHz
(j)Telemetry items	·Loop stress
	·AGC voltage
	·Squelch
(k)House keeping items	·Chassis temperature
(l)Power supply	±12.8V +5.2V
(m)Power consumption	5.5W nominal
(2)Mechanical performance	
(a)Size	207×175×105.5 mm
(b)Weight	2.64kg

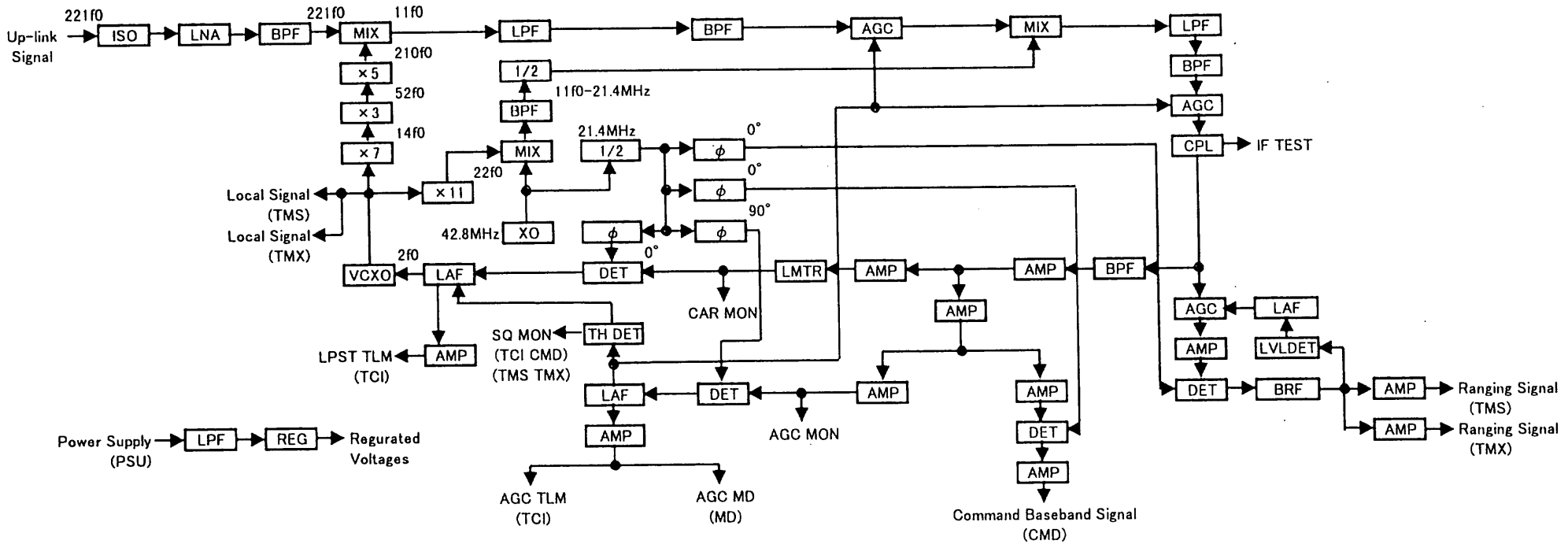

Fig. 3.4.1-1 S-band Receiver-A (SBR-A) Block Diagram

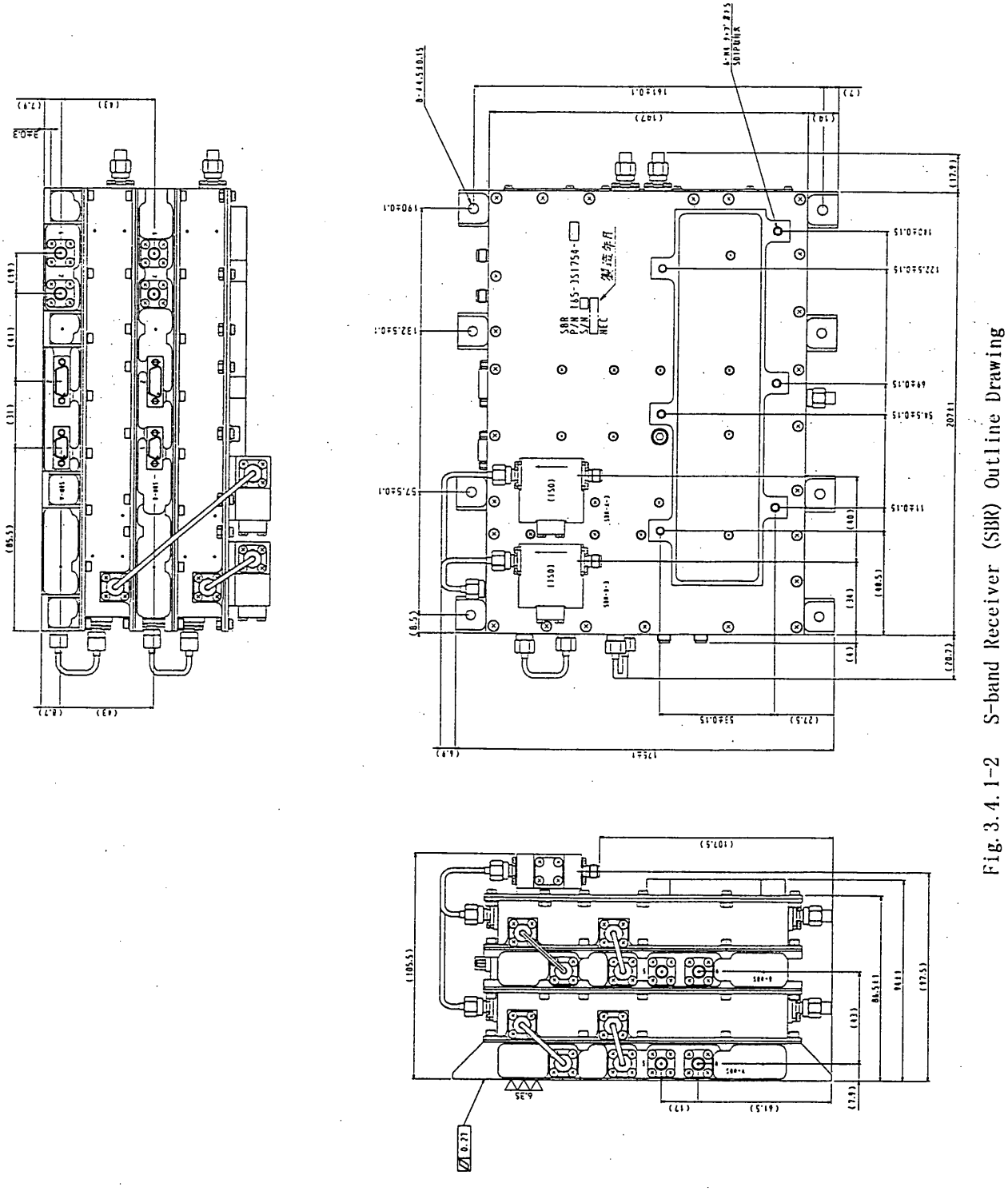

Fig. 3. 4. 1-2 S-band Receiver (SBR) Outline Drawing

3.4.2 S-band Transmitter (TMS)

3.4.2.1 General

An S-band Tranmitter (TMS) outputs the S-band down-link carrier modulated by the telemetry signals with/without the ranging signal to the antenna subsystem.

3.4.2.2 Functions

The block diagram of TMS is shown in Fig.3.4.2-1.

TMS generates or receives the local signal (19MHz) in the local section and frequency-multiplies it by 20 (382MHz), and then modulates the IF carrier by the telemetry signal from the Data Handling Unit (DHU) with/without the ranging signal from S-band Receiver (SBR). Furthermore TMS frequency-multiplies the IF carrier by 6 to make a radio wave in S-band, amplifies and then outputs the radio wave to the antenna subsystem via a isolator.

TMS can switch the local signal between the fixed frequency signal from the Temperature Compensated Crystal Oscillator (TCXO) for the noncoherent mode, the phase-coherent signals to SBR local signals for the coherent mode, and the fixed frequency signal from Ultra-stable Oscillator (USO) for the USO mode which is incoherent one to the up-link carrier. TMS can also switch the power output between on and off, output power high and low, auto coherent enable and disable, telemetry modulation on and off, ranging modulation on and off and ranging SBR-A and SBR-B. TMS outputs the local signal to X-band Transmitter (TMX) only in the noncoherent mode or the USO mode.

TMS has the status monitors of the above-mentioned switched status, and has a chassis temperature sensor for house-keeping.

3.4.2.3 Performance

(1)Electrical performance		
(a)Transponder coherency		
Downlink/Uplink frequency ratio		240/221
(b)Transmit carrier frequency		
(c)Frequency stability		
(i)Noncoherent mode		
(イ)Long term		within $\pm 1\times10^{-6}$/year
(ロ)Short term		$\leqq 1\times10^{-9}$rms/sec
(ii)USO* mode		$\leqq 4\times10^{-13}$/sec
(d)Output power	High power mode	4.0W±1dB
	Low power mode	0.1W±1dB
(e)Spurious outputs	Harmonics	≦+10dBm
	Others	≦-10dBm
(f)Impedance		50Ω VSWR ≦ 1.5
(g)Modulation performance		
(i)Telemetry channel		
(イ)Direct modulation telemetry		
・Modulation form		PCM-PM
・Bit rate		2048bps to 32768bps
・Modulation index		0.83rad0-p±7%
(ロ)PSK modulation telemetry		
・Modulation form		PCM-PSK-PM
・Bit rate		64bps to 1024bps
・Subcarrier frequency		8192Hz squarewave
・Modulation index		0.83rad0-p±7%
(ii)Ranging channel		
(イ)Modulation form		Tone-PM
(ロ)Tone frequency		≃516kHz squarewave
(ハ)Modulation index		0.65rad0-p±0.05rad
(ニ)Polality		Inverted
(ホ)Delay time variation		≦ 100nsec
(h)Occupied bandwidth		≦ 3.2MHz
(i)Command items		・Output power high, low ・Auto coherent enable, disable ・USO mode ・Telemetry modulation on, off ・Ranging modulation on, off ・Ranging -A,-B
(j)Telemetry items		・Power on/off ・Output power high/low ・Auto coherent enable/disable ・Coherent/noncoherent ・USO mode/noncoherent mode ・Telemetry modulation on/off ・Ranging modulation on/off ・Ranging-A/B
(k)House-keeping items		・Chassis temperature
(l)Power supply		±12.8V +5.2V
(m)Power consumption		
High power mode		17.9W nominal
Low power mode		12.2W nominal
Off mode		0.1W nominal
(2)Mechanical performance		
(a)Size		160×167×63.1mm
(b)Weight		0.98kg

* USO has been developed by The Johns Hopkins University, Applied Physics Laboratory, and supplied to ISAS by NASA.

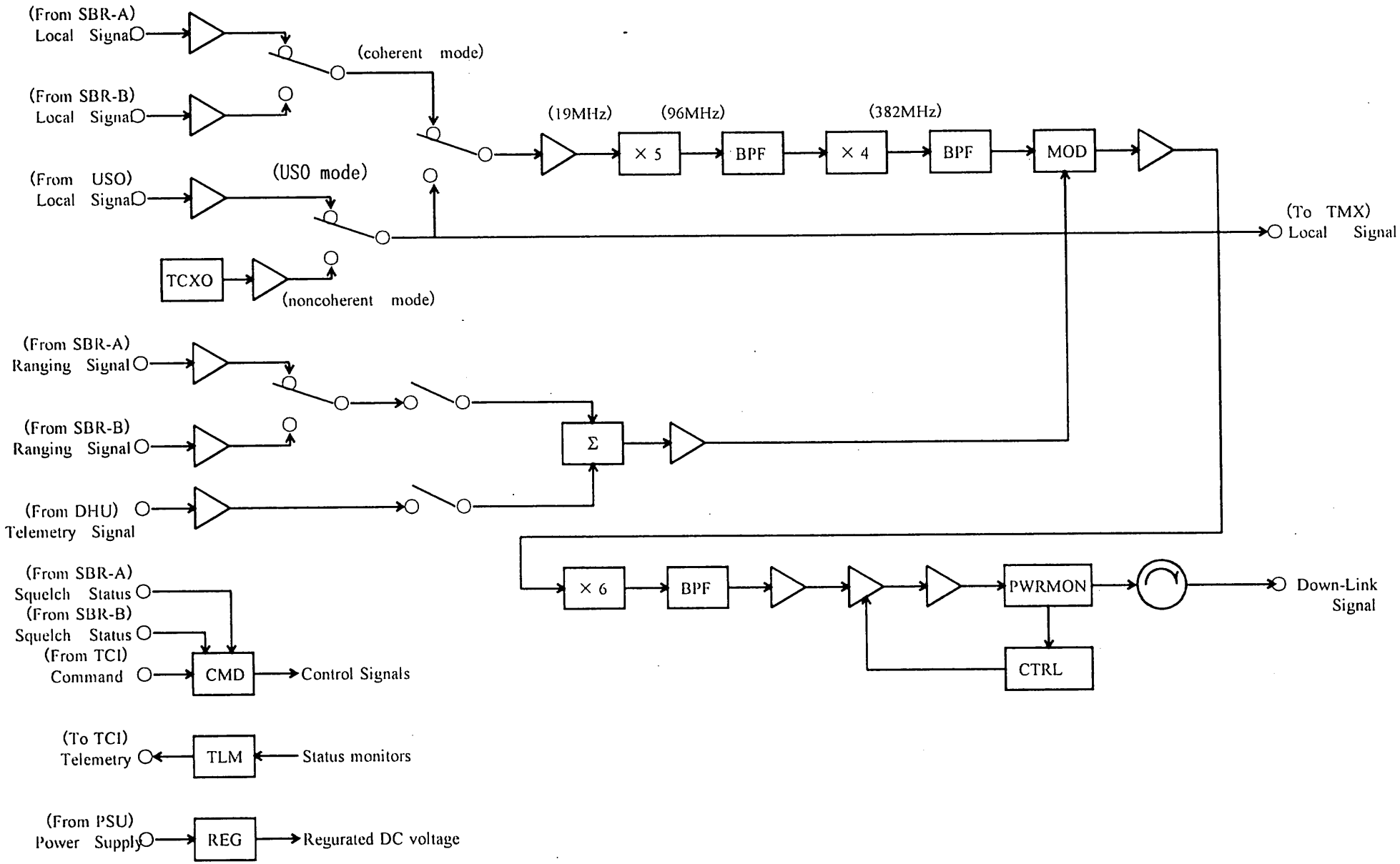

Fig.3.4.2-1 S-band Transmitter (TMS) Block Diagram

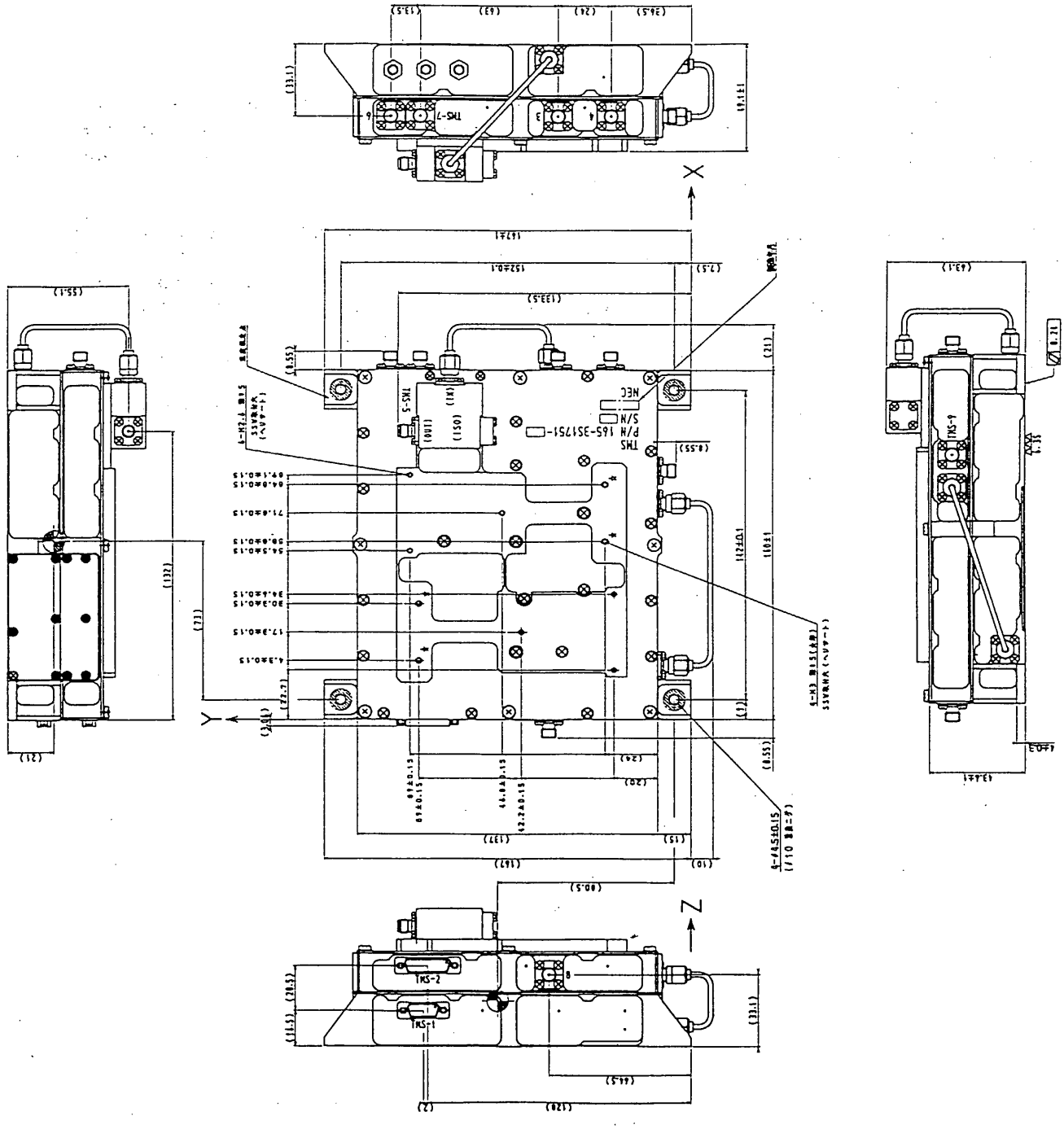

Fig.3.4.2-2 S-band Transmitter (TMS) Outline Drawing

3.4.3 X-band Transmitter (TMX)

3.4.3.1 General

An X-band Transmitter (TMX) outputs the X-band down-link carrier modulated by the telemetry signal or the ranging signal to X-band Power Amplifier (XPA).

3.4.3.2 Functions

The block diagram of TMX is shown in Fig.3.4.3-1.

TMX generates the X-band carrier (8.4GHz) in the local section and then modulates it by the telemetry signal from the Data Handling Unit (DHU) or the ranging signal from S-band Receiver (SBR). Furthermore TMX amplifies the X-band down-link signal and outputs it to the XPA via a isolator.

TMX can switch the local reference (19MHz) between the fixed frequency signal from the Temperature Compensated Crystal Oscillator (TCXO) for the noncoherent mode, phase-coherent signals to SBR local signals for the coherent mode, and the fixed frequency signal from Ultra-stable Oscillator (USO) for the USO mode which is incoherent one to the up-link carrier. TMX can also switch the power output between on and off, modulation signal telemetry and ranging, telemetry modulation on and off and ranging SBR-A and SBR-B.

TMX has the status monitors of the above-mentioned switched status, and has a chassis temperature sensor for house-keeping.

3.4.3.3 Performance

(1)Electrical performance		
(a)Transponder coherency		
Downlink/Uplink frequency ratio		880/221
(b)Transmit carrier frequency		
(c)Frequency stability		
(i)Noncoherent mode		
(イ)Long term		within $\pm 1\times10^{-6}$/year
(ロ)Short term		$\leqq 1\times10^{-9}$rms/sec
(ii)USO* mode		$\leqq 4\times10^{-13}$/sec
(d)Output power		19.5mW±1dB
(e)Spurious outputs		≦-10dBm
(f)Impedance		50Ω VSWR ≦ 1.5
(g)Modulation performance		
(i)Telemetry channel		
(イ)Direct modulation telemetry		
・Modulation form		PCM-PM
・Bit rate		2048bps to 32768bps
・Modulation index		1.28rad0-p±7%
(ロ)PSK modulation telemetry		
・Modulation form		PCM-PSK-PM
・Bit rate		64bps to 1024bps
・Subcarrier frequency		8192Hz squarewave
・Modulation index		1.28rad0-p±7%
(ii)Ranging channel		
(イ)Modulation form		Tone-PM
(ロ)Tone frequency		≃516kHz squarewave
(ハ)Modulation index		0.9rad0-p±0. 1rad
(ニ)Polality		Inverted
(ホ)Delay time variation		≦100nsec
(h)Occupied bandwidth		≦ 3.2MHz
(i)Command items		・Power on, off ・Auto coherent enable, disable ・TMS coherent ・Modulation signal telemetry, ranging ・Telemetry modulation on,off ・Ranging -A, -B
(j)Telemetry items		・Power on/off ・Auto coherent enable/disable ・Coherent/noncoherent ・TMS coherent/noncoherent ・Modulation signal telemetry/ranging ・Telemetry modulation on/off ・Ranging A/B
(k)House-keeping items		・Chassis temperature
(l)Power supply		±12.8V +5.2V
(m)Power consumption	On mode	2.4W nominal
	Off mode	0.1W nominal
(2)Mechanical performance		
(a)Size		155×166×66 mm
(b)Weight		1.29kg

* USO has been developed by the Johns Hopkins University, Applied Physics Laboratory, and supplied to ISAS by NASA.

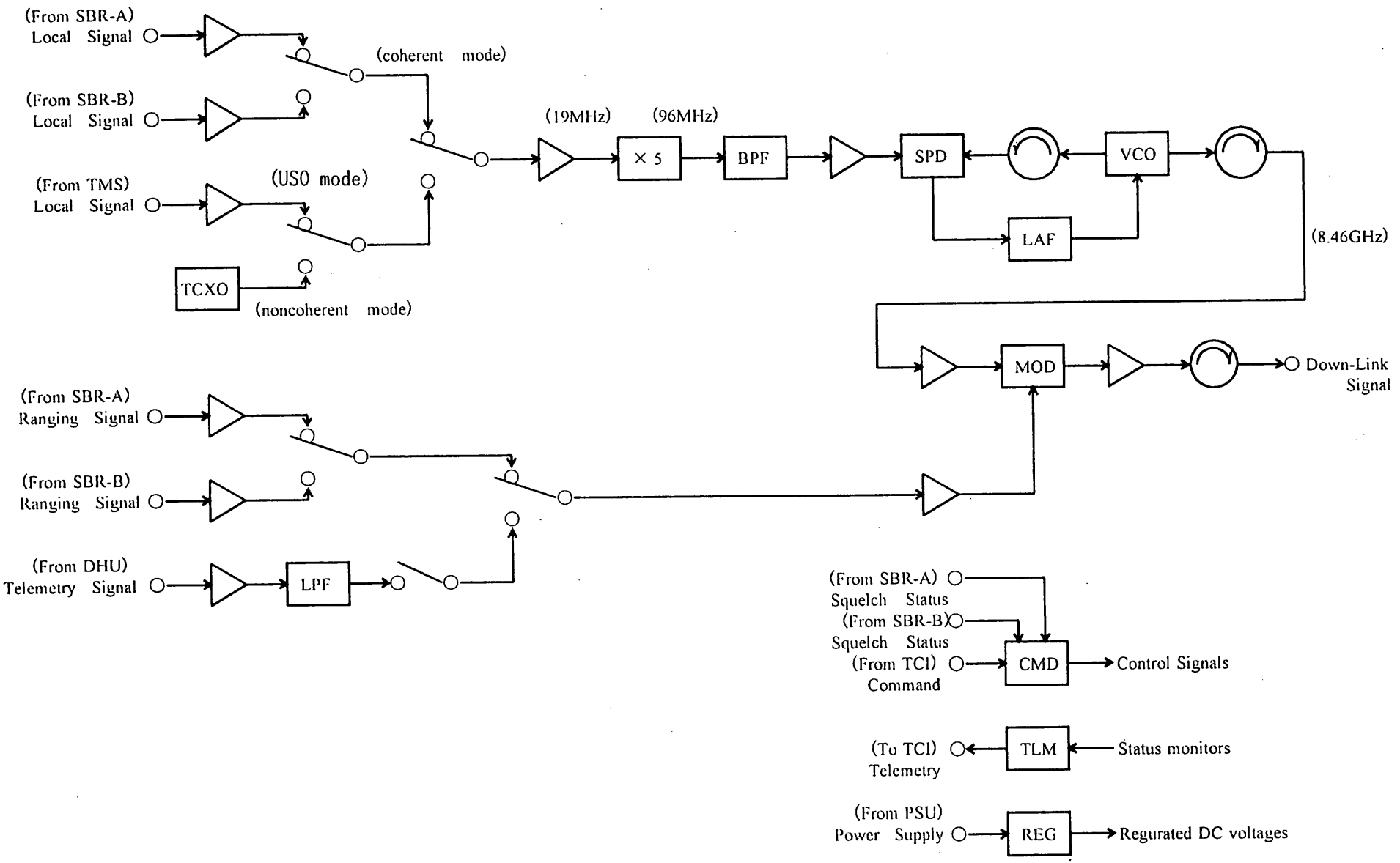

Fig.3.4.3-1 X-band Transmitter (TMX) Block Diagram

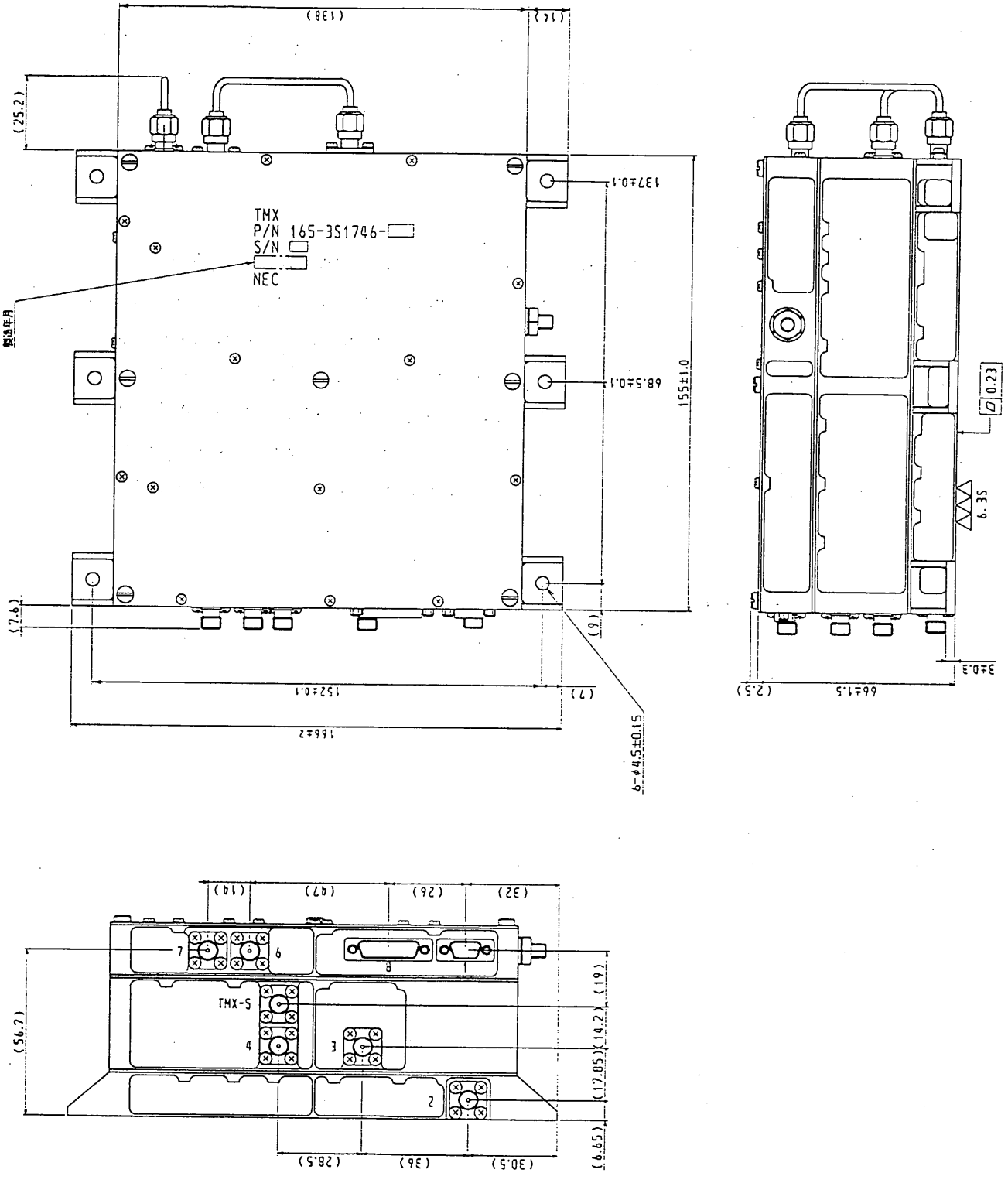

Fig.3.4.3-2 X-band Transmitter (TMX) Outline Drawing

3.4.4 X-band Power Amplifier (XPA)

3.4.4.1 General

The XPA is located at the top of the HGA, and covered by a thermal filler. The XPA amplifies the output signal of the TMX to improve the EIRP which is transferred to the earth. The RF output is more than 5.7 watts over the in-orbit life.

3.4.4.2 Electrical Function

The block diagram is shown in Figure 3.4.4-1. All amplifiers space-qualified GaAs FETs from NEC. The LPA is a hermetically shielded HMIC* amplifier. The PA and HPA use the same type of high-power GaAs FETs formerly used for other spacecraft , and their qualification tests have been already completed successfully. The HPA shows the saturated output power of 6 watts in minimum and the linear gain of 10dB in minimum . At the input and output ports , there are isolators to improve the matching. Microstrip lines on the Teflon glass substrate are used to connect the each power GaAs FETs to minimize the size and weight.

*HMIC stands for a Hybrid Microwave Integrated Circuit

3.4.4.3 Performance

(1)Electrical Performance

(a) input frequency	8.41GHz
(b) input signal level	+10+/-2dB
(c) output signal level	+37.6dBm
(d) DC input power	26W max.
(e) input / output VSWR	1.5 max.

(2)Mechanical Performance

(a) mass	240g nom.
(b) size	131×86×24 mm

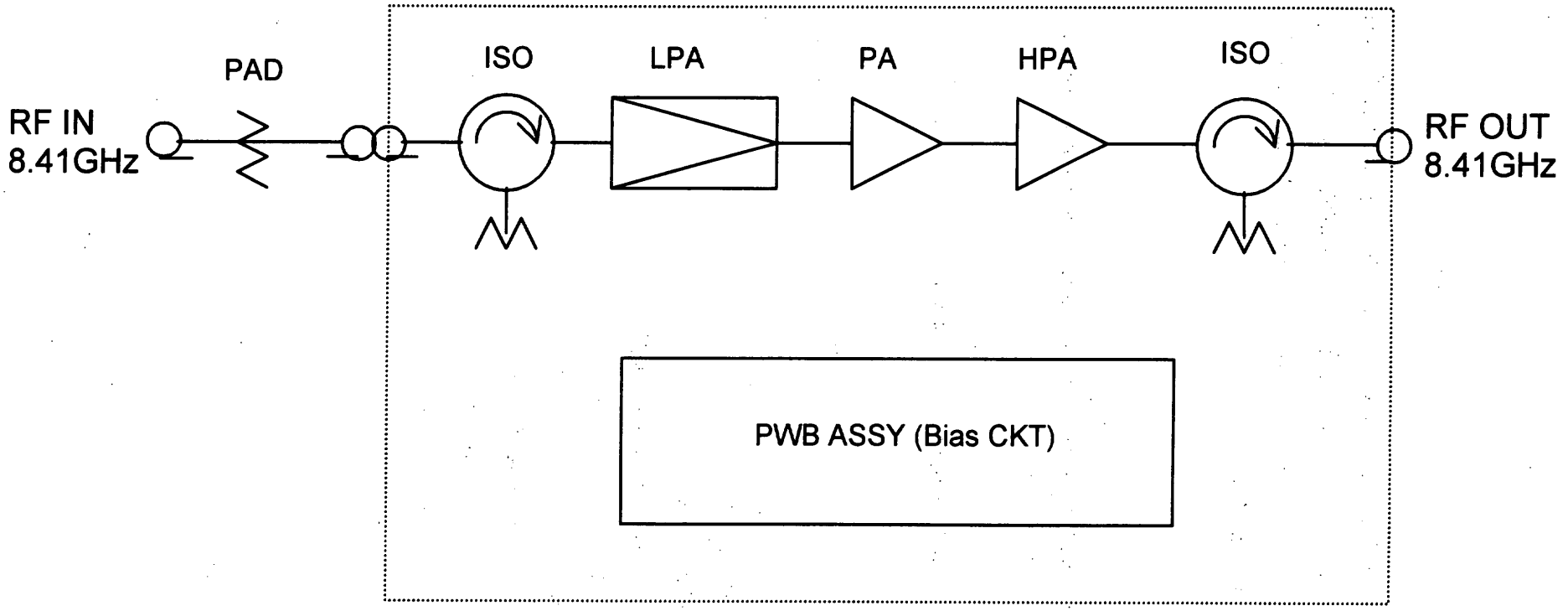

ISO : Isolator , LPA : Low Power Amplifier

PA : Power Amplifier , HPA : High Power Amplifier

Figure 3.4.4-1 XPA BLOCK DIAGRAM

3.4.5 S-band Switch (SSW)

3.4.5.1 General

S-band Switch (SSW) -A and -B are single pole throw switches. SSW-A switches the S-band down-link signal from S-band Transmitter (TMS) between to S-band Diplexer (SDIP) -A and to SDIP-B. SSW-B switches the same signal from SDIP-B between to S-band High Gain Antenna (S-HGA) and Low Gain Antenna (LGA) -B.

3.4.5.2 Functions

SSW is a mechanical latching relay. SSW switches when the coil is energized by the control signal from Telemetry Command Interface (TCI).

SSW has the status monitor of the above-mentioned switched status.

3.4.5.3 Performance

(1) Electrical performance

(a) Frequency	2.1GHz for RX	
	2.3GHz for TX	
(b) Impedance	50 Ω VSWR ≦ 1.5 (each port)	
(c) Insertion loss	≦ 0.5dB	
(d) Switching time	≦ 20msec	
(e) Command items	SSW-A	・SDIP-A/SDIP-B
	SSW-B	・S-HGA/LGA-B
(f) Telemetry items	SSW-A	・SDIP-A/SDIP-B
	SSW-B	・S-HGA/LGA-B

(2) Mechanical performance

(a) Size	Fig.3.4.5-1
(b) Weight	73g

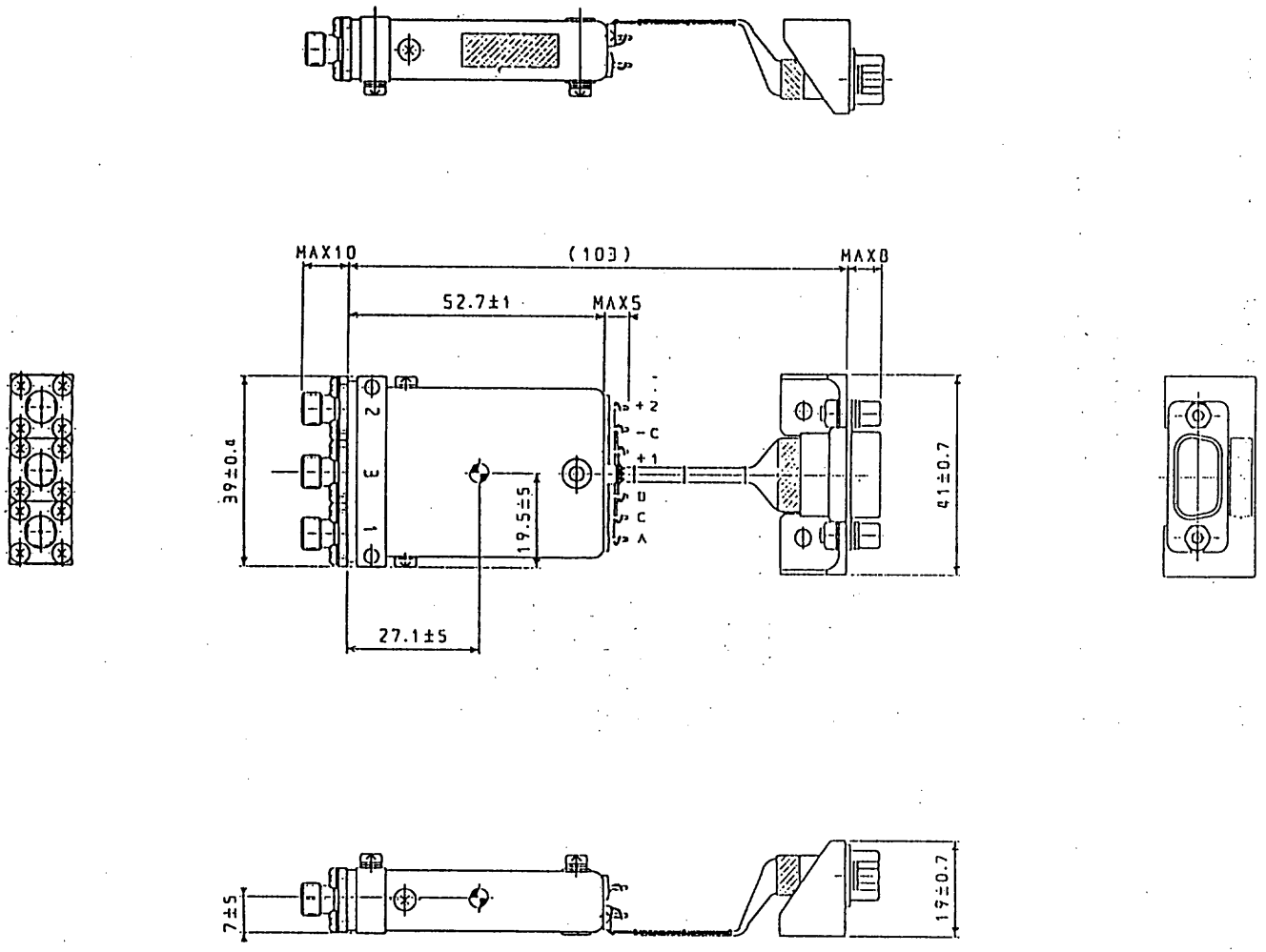

Fig.3.4.5-1 OUTLINE DRAWING OF SSW

3.4.6 S-Band Diplexer (SDIP)

3.4.6.1 General

S-band diplexer (SDIP) isolates the receiving and transmitting signals in order for simultaneous reception and transmission with a single S-Band antenna.
The two SDIPs are called SDIP-A and SDIP-B.

3.4.6.2 Functions

(i) Up-Link signal (f02) from S-band antenna subsystem is blocked by BPF-1 and passes through BPF-2 to enter SBR.

(ii) The block diagram of SDIP is shown in Fig 3.4.6-1
Down-Link signal (f01) from TMS via a S-band switch goes through BPF-1 and is fed to S-band antenna subsystem,but is blocked by BPF-2 to separate the receiving system.

3.4.6.3 Performance

(1) Electrical performance

(a) Center Frequency	
·TX (BPF-1)	
·RX (BPF-2)	
(b) Insertion Loss	
·TX (BPF-1)	≦ 1.00dB (f01 ± 3MHz)
·RX (BPF-2)	≦ 0.85dB (f02 ± 3MHz)
(c) VSWR	≦ 1.5
(d) Isolation	
·TX → RX	≦ 76dB (f01)
·RX → TX	≦ 82dB (f02)

(2) Mechanical performance

(a) Size	Dimensions of tthe SDIP are shown in Fig 3.4.6-2
(b) Weight	0.32kg

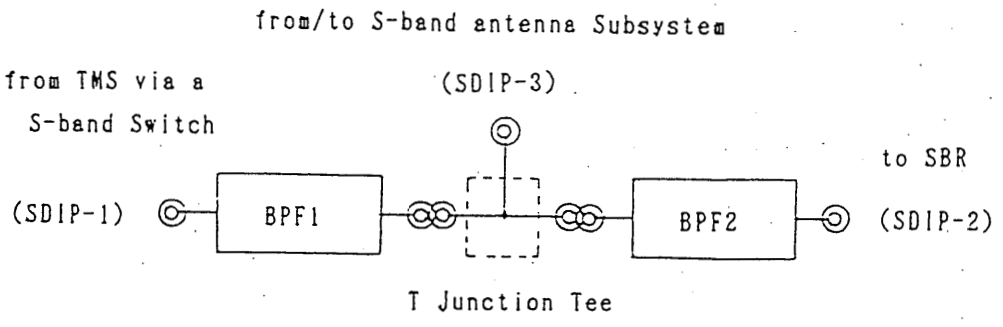

Fig3.4.6-1 S Band Diplexer (SDIP) Block Diagram

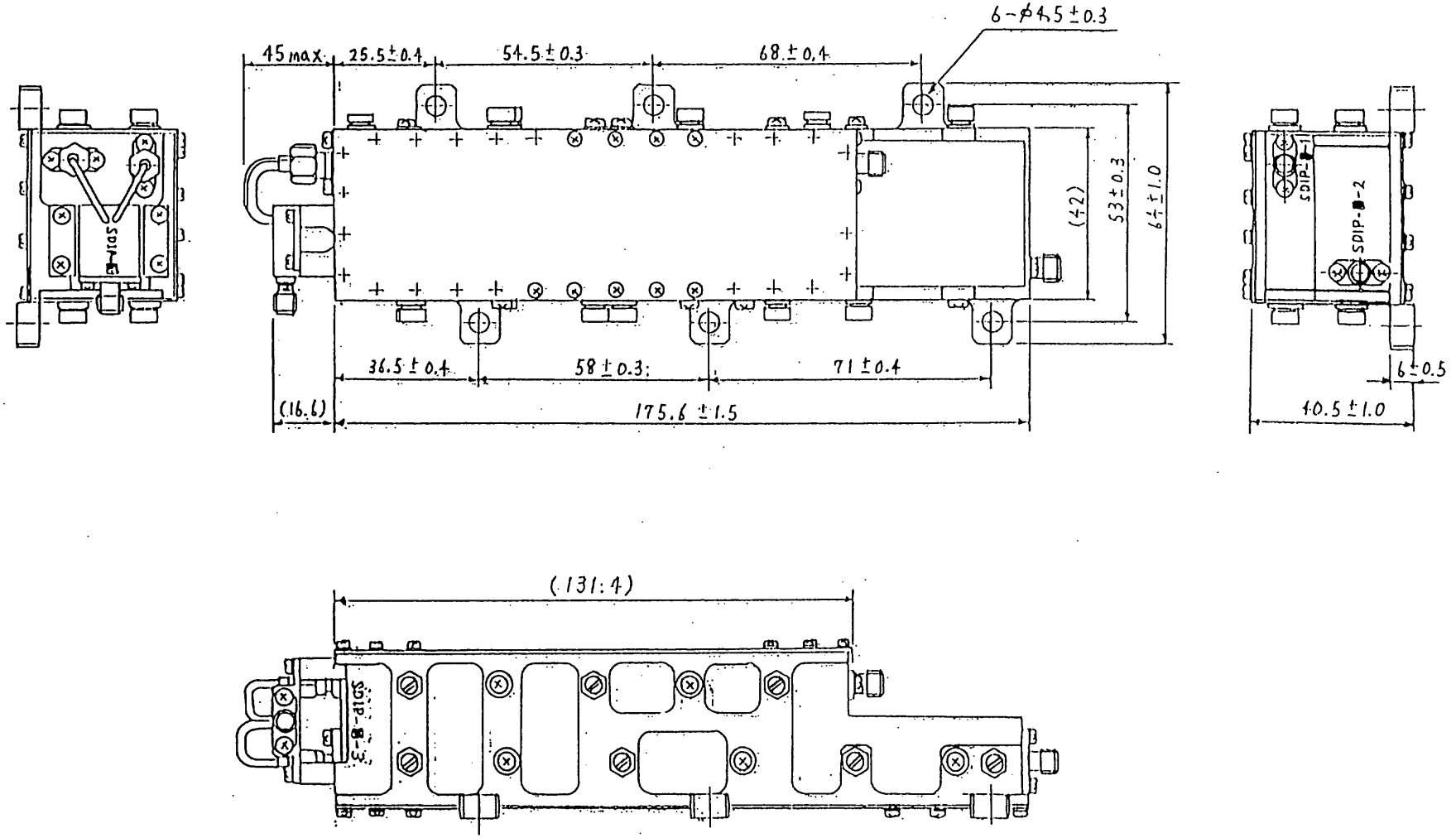

Fig3.4.6-2 Size of the SDIP

4. Command and Data Handling System

T.Yamada (ISAS)
NEC Corporation

4.1 Overview

4.1.1 Operation Control System

Basically, all commands are transmitted with a PIM identification number (IC) from the ground to the onboard data bus. A PIM sends commands to the specific target subsystem only. So, other subsystems do not need to take care of their IC's.

After sending all command information, DHU sends an ECW(End of Command Writing) signal to the subsystem to inform of the completion of command sending. The subsystem then learn that DHU has completed command writing activity. The command sending sequence is shown in figure 4.1.1-1

4.1.1.1 Types of Commands

(1) Types of Commands

PLANET-B command system will be categorized as shown in the table below. Each subsystem needs to know only the "Command Block Type".

In the Organized Operation, a command group or groups stored in DHU (called OG) are used individually or in combination.

Command Block Type	DC DC+BC+・・・+BC
Operation Type	Individual Operation Organized Operation
Generation Point	Ground Station DHU onboard (Onboard Generated Command)

Ground Station→(IC+Command)→DHU→(IC+Command / to all PIM's) ⟶

⟶ Specified PIM→(Command+ECW)→Subsystem

⟶ Other PIM's→No Action

Figure 4.1.1-1 Command Transmission Flow

(2) Command Block Type

DHU's command operation task is conducted in 31.25msec duration a cycle period of 62.5msec. The command operation unit, which is conducted in the above duration, is called "Command Block". The types of command block are DC and DC+BC+·····+BC (the length of BC should be 128bytes or less.)

A) DC

DC consists of 8bits and is identified by the matrix of X-Code(HEX: Higher 4bits) and Y-Code(HEX: Lower 4bits). DC is used for simple operations like ON, OFF, START, STOP, ENABLE, DISABLE etc. 254 DCs can be assigned to each PIM. The DC construction is shown in figure 4.1.1-2.

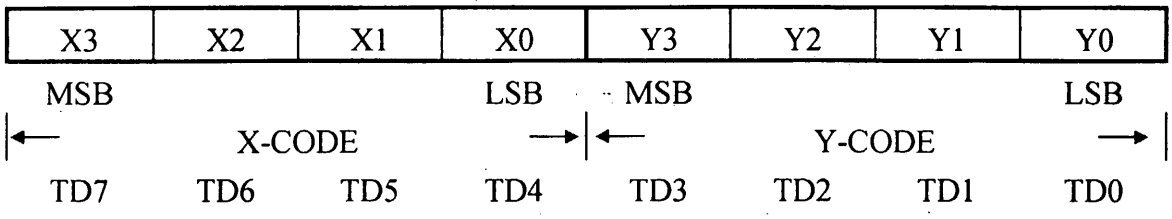

TD7-TD0 : Signal ID of data from PIM to user.

Figure 4.1.1-2 DC Construction

User can specify the absolute time (LSB:1sec) of command execution for DC operation. Execution time is defined as the time when DHU transmits a DC to the data bus. The absolute time is converted to TI (Time Indicator in DHU) for uplink from the ground. But in some cases, the real execution time may be affected by another operation such as an interrupt command. DHU has an area for 32 command blocks for time-

specified commands.

(Note1) The 254's DC area for each PIM includes the one defined to system use.

(Note2) For time-specified DC operations, the length of command block should be 14bytes or less. (Note that the length includes IC(1byte) and TI(4bytes). Refer to figure 4.1.1-3)

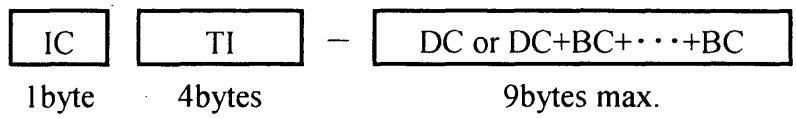

Figure 4.1.1-3 Length Limitation for Time-specified Command

B) DC+BC+.....+BC

This configuration consists of DC for function identification and BC with 8bits(=1byte)/unit (128units max). For the transmission ofmore than 128bytes, the data should be divided into several command blocks. But in some cases, other command block may be inserted between these command blocks.

Basically, another DC for execution should not be added. From the viewpoint of component design optimization, users can use some BCs for some functions. (Ex."The Number of Byte" "Check Sum", etc. Refer to figure 4.1.1-4.) The types of application are as shown in thw table below. For these types, users can specify its exection time by absolute time. Refer to the above item "A) DC".

(A) Data Transmission	Data writing in the onboard memory area such as Program Loading.
(B) Parameter Set	Parameter setting for the first DC and BCs that follow the DC.
(C) Bit BC	Only one command execution of several actions, which are identified by bit level, respectively like as ON/OFF.

(Note) For the method of (B) and (C), the upper limitations of BCs to be added should be 12bytes and 2bytes, respectively.

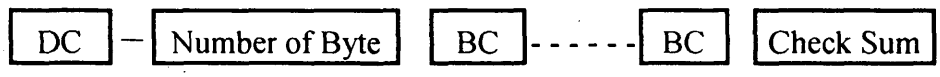

Figure 4.1.1-4 DC+BC Construction Example

C) Operation Type

C-1) Individual Operation

This operation is the method of sending each command block, independently.

The configuration of command transfer frame from the ground station is shown in figure 4.1.1-5.

The PIM transmits ECW (End of Command Write) to a user after each command block (One command block = DC or DC+BC+···+BC). The address for ECW is FFFEh and thw written data is the number of bytes in the command block.

C-2) Organized Operation

Please see Se4ction 4.1.1.2.

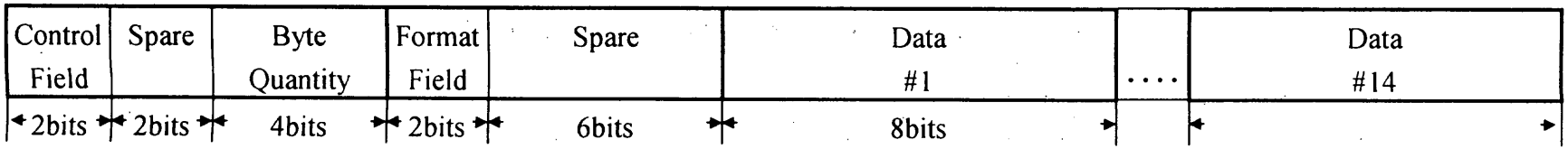

-Control Field
11 / Individual Mode
10 / Continuous Mode (Last Frame)
01 / Continuous Mode (First Frame)
00 / Continuous Mode (Continuation Frame)

-Format Field
11 / All BC
10 / IC+TI+DC or IC+TI+DC+BC+···+BC
00 / IC+DC or IC+BC+···+BC

-Byte Quantity : The number of byte including IC and TI in the unit.

Figure 4.1.1-5 Command Transfer Frame Configuration (1/2)

1) IC+DC or IC+DC+BC+···+BC (INDIVIDUAL MODE)

11110010	00111111	IC	DC	(BC)	(BC)	(BC)	(BC)	(BC)	(BC)	(BC)	(BC)	(BC)	(BC)	(BC)	(BC)

2) IC+DC+BC+···BC (CONTINUOUS MODE / FIRST FRAME)

01111110	00111111	IC	DC	BC	BC	BC	BC	BC	BC	BC	BC	BC	BC	BC	BC

3) BC+···+BC (CONTINUOUS MODE / CONTINUATION FRAME)

00111110	11111111	BC	BC	BC	BC	BC	BC	BC	BC	BC	BC	BC	BC	BC	BC

4) BC+···+BC (CONTINUOUS MODE / LAST FRAME)

10110010	11111111	BC	BC	(BC)	(BC)	(BC)	(BC)	(BC)	(BC)	(BC)	(BC)	(BC)	(BC)	(BC)	(BC)

5) IC+TI+DC or IC+TI+DC+BC+···+BC (INDIBIDUAL MODE)

11110110	1011111	IC	TI	TI	TI	TI	DC	(BC)	(BC)	(BC)	(BC)	(BC)	(BC)	(BC)	(BC)

Figure 4.1.1-5 Command Transmission Track Configuration (2/2)

4.1.1.2 OP and OG

(1) OG

A basic unit of command group for organized operation is called OG. An OG consists of 16 sets of "IC" and "Command Block". The length of command block including IC(1byte) should be 16bytes or less. (See figure 4.1.2-1.)

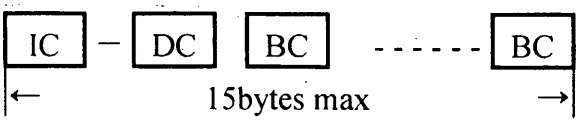

Figure 4.1.2-1 DC+BC Construction Example

The time interval of command transmission is basically 62.5msec for one block command. (In some cases, time interval may be affected by an interruption command and so on.)

(2) Organized Operation

For executing an OG individually, OG execution command is sent to DHU. And a sequence of operations including several OGs can also be conducted. This operation method is called OP. The sequence of OP will be controlled by the CE (Control Element) which consists of OG# and the time interval between the starting time of next OG's. The interval range is between 30sec to 3825sec (about 1hour) by the unit of 15sec. An OP can have up to 512 CEs.

For OP operations, an OP execution command for each OP system is sent to DHU with the starting CE#. Therefore, the OP operation can be started from its halfway. The organized operation sequence is shown in figure 4.1.2-2. The area of 128OGs is conserved for this OP system. One area is using OP system, another one is edited in OP operating.

The OP will stop in the following cases.

- OG including "OP STOP(DC)" in OP is executed.
- "OP STOP(DC)" cut in during OP operation.
- OG including "OP STOP(DC)" cut in during OP operation.
- OP operation is completed (to CE#511).

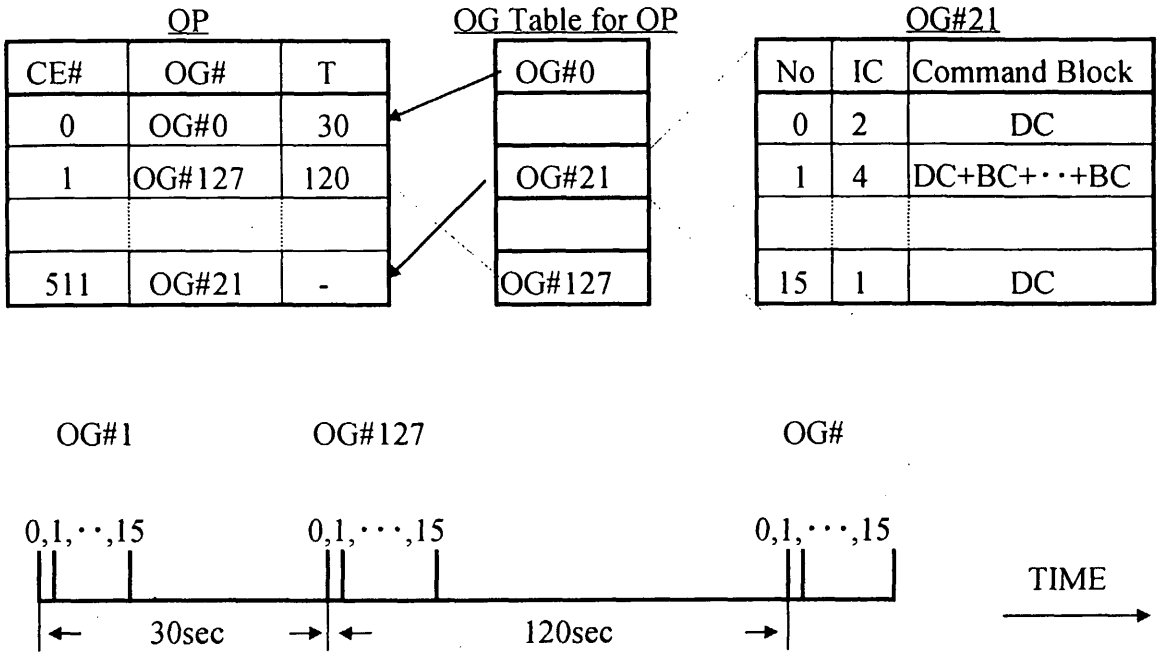

Figure 4.1.2-2 Organized Operation Sequence

4.1.1.3 Program Loading

The DHU onboard PLANET-B uses DMA (Direct Memory Access) method for onboard memory management (verification, rewriting, and dumping of onboard memory, and program loading from BFM).

The DMA method consists of the following steps:

(1) The user transfer the control initiative of its internal bus to PIM sides.

(2) The PIM access the user's memory directly for required activity.

(3) The user returns the bus control initiative from PIM to its internal bus.

Two commands, which are called "BUS ACCESS ENABLE" and "BUS ACCESS DISABLE", are used for the control initiative transfer.

BFM(Back-up File Memory) with DHU has EEPROM and supports the memory patrol function which requires high reliability. The most important function of BFM is to verify onboard memory automatically. With this function, onboard memory verification activity will not disturb the DHU's telemetry edition activity. The BFM supports only those memories which satisfy both of the following conditions.

1) The user have no ROM for onboard program storage.
(BFM does not suppor any ROM data.)

2) The memory can be accessed from PIM side with DMA (Direct Memory Access) method, and component's status can be read dependently, although in DMA operations.

(1) Onboard Memory Verification

The data storaged in BFM can be compared by DHU with the specified data in the onboard subsystem by 512bytes (32kbytes max). Reading data is performed during the time window for DHU's action except command sending. (This window has a 31.25msec duration with a cycle time of 62.5msec regardless of the edition bit rate and is called Command Window.) Hence, onboard memory verification can be conducted without changing telemetry edition mode with no effect on the functions of other PIM's. As the time required for 32kbyte memory verification is 32kbytes/512bytes × 62.5msec × 2 = 8sec, the CPU of the specified subsystem is changed to "HALT" mode supporting only HK packet telemetry, which does not need CPU support.

The verification result is informed to the ground by a simple form: "Good" or "No Good", in the HK packet. Data dumping is needed for getting the detail information (BFM ADDRESS, BFM DATA, USER DATA). Data dumping accompanies telemetry

edition mode change. The command sequence for onboard memory verification is shown in figure 4.1.3-1.

(2) Rewriting Onboard Memory

User can require onboard subsystem memory supported by BFM, users should take by the following procedure:

(1) Rewrite the specified area in BFM.

(2) Transfer the data from BFM to the specified subsystem.

For rewriting onboard subsystem memory which is not in the area supported by BFM, the component side is required to do rewriting and memory data management by itself.

Oonboard memory rewriting will be performed by 512 bytes with DMA method during the command window as onboard memory verification. Onboard memory rewriting can be conducted without changing with no effect on the functions of other PIMs. The command sequence for onboard memory verification is shown in figure 4.1.3-2.

(3) Onboard Memory Dumping

The memory data in the subsystems, which are compatible with the DMA method, can be dumped to the ground in 256bytes/packet. The telemetry edition mode need to be changed for data dumping. After dumping data, the telemetry edition mode is automatically changed to the specified mode. The onboard memory dumping is applicable to all the subsystems which comply with DMA method. For dumping the data not supported by DMA, users should insert the data in its mission packet. In this case, unless otherwise specially required, the telemetry edition mode is not changed. The command sequence for onboard memory dumping is shown in figure 4.1.3-3.

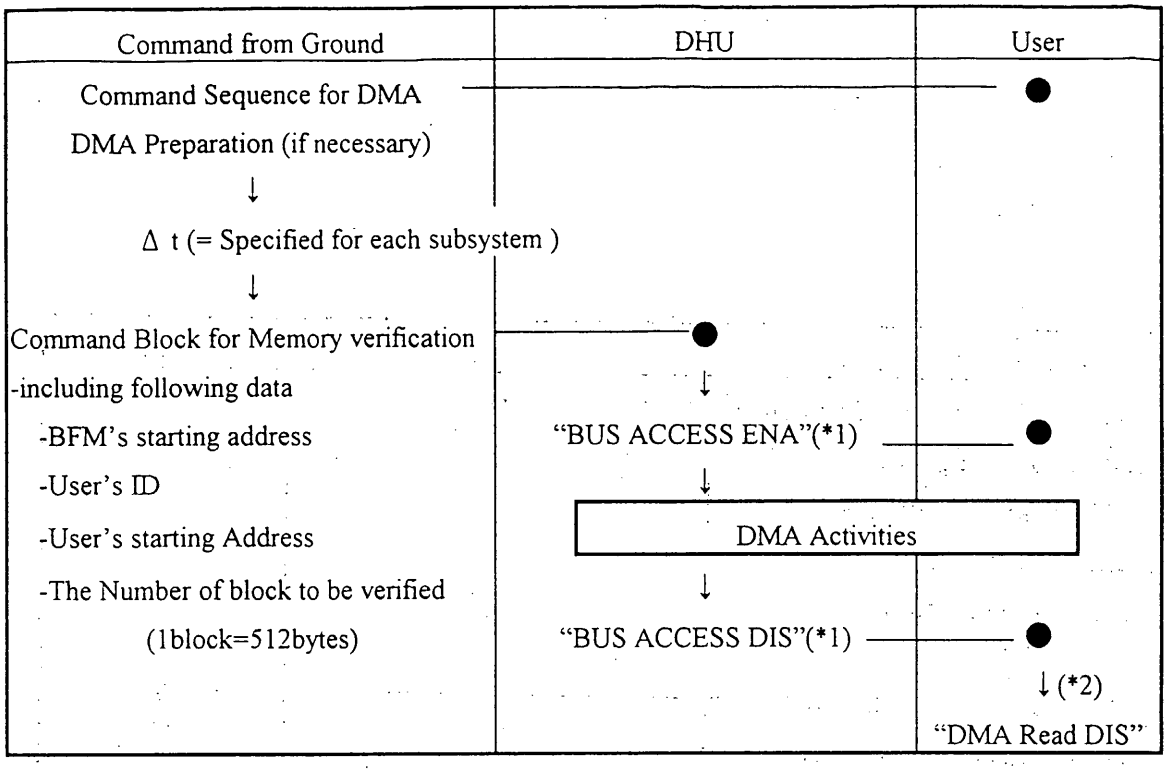

*1-This command is generated by DHU. *2-This is done by a user.

Figure 4.1.3-1 Command Sequence for Onboard Memory Verification

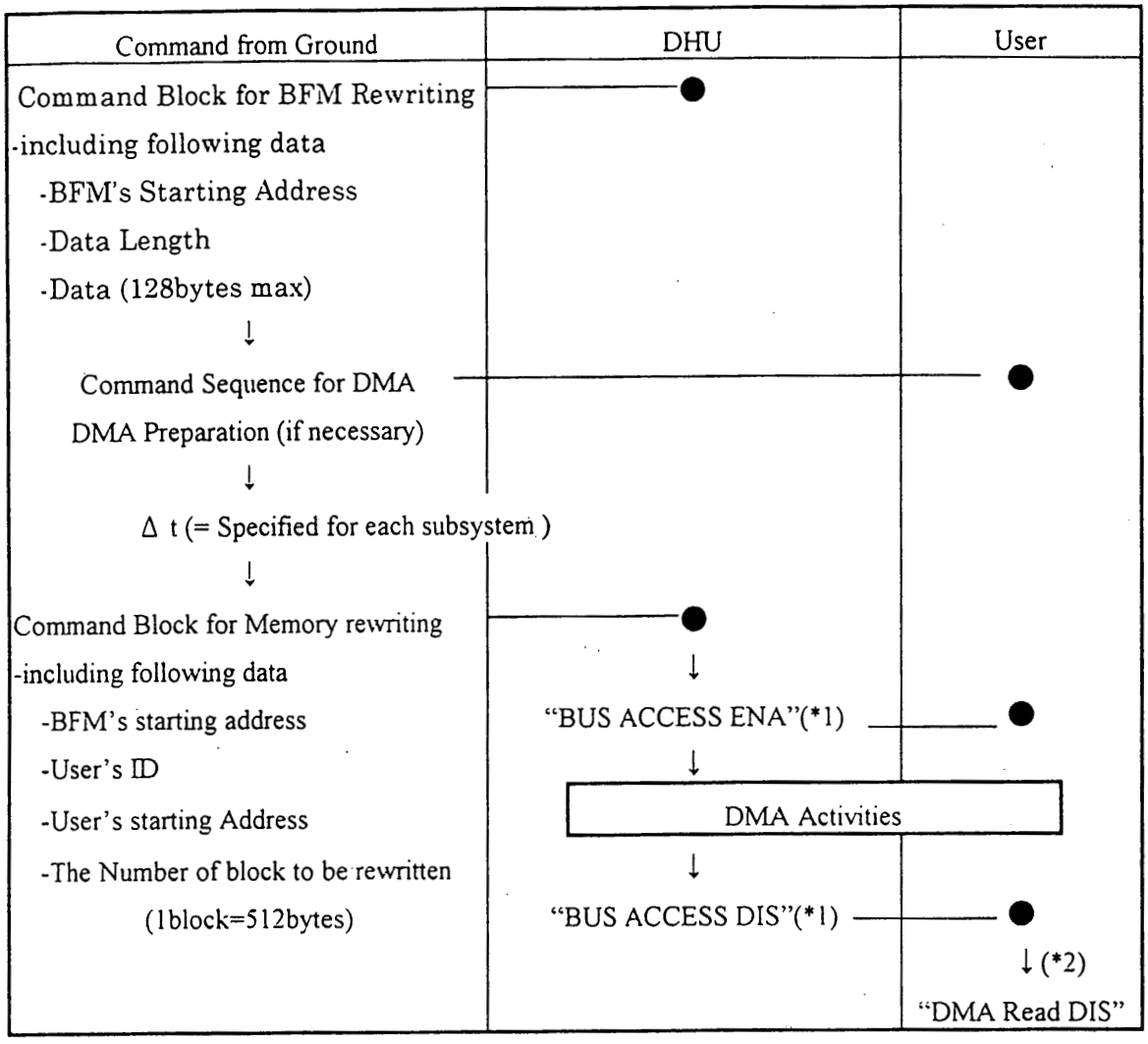

*1-This command is generated by DHU. *2-This is done by a user.

Figure 4.1.3-2 Command Sequence for Rewriting Onboard Memory

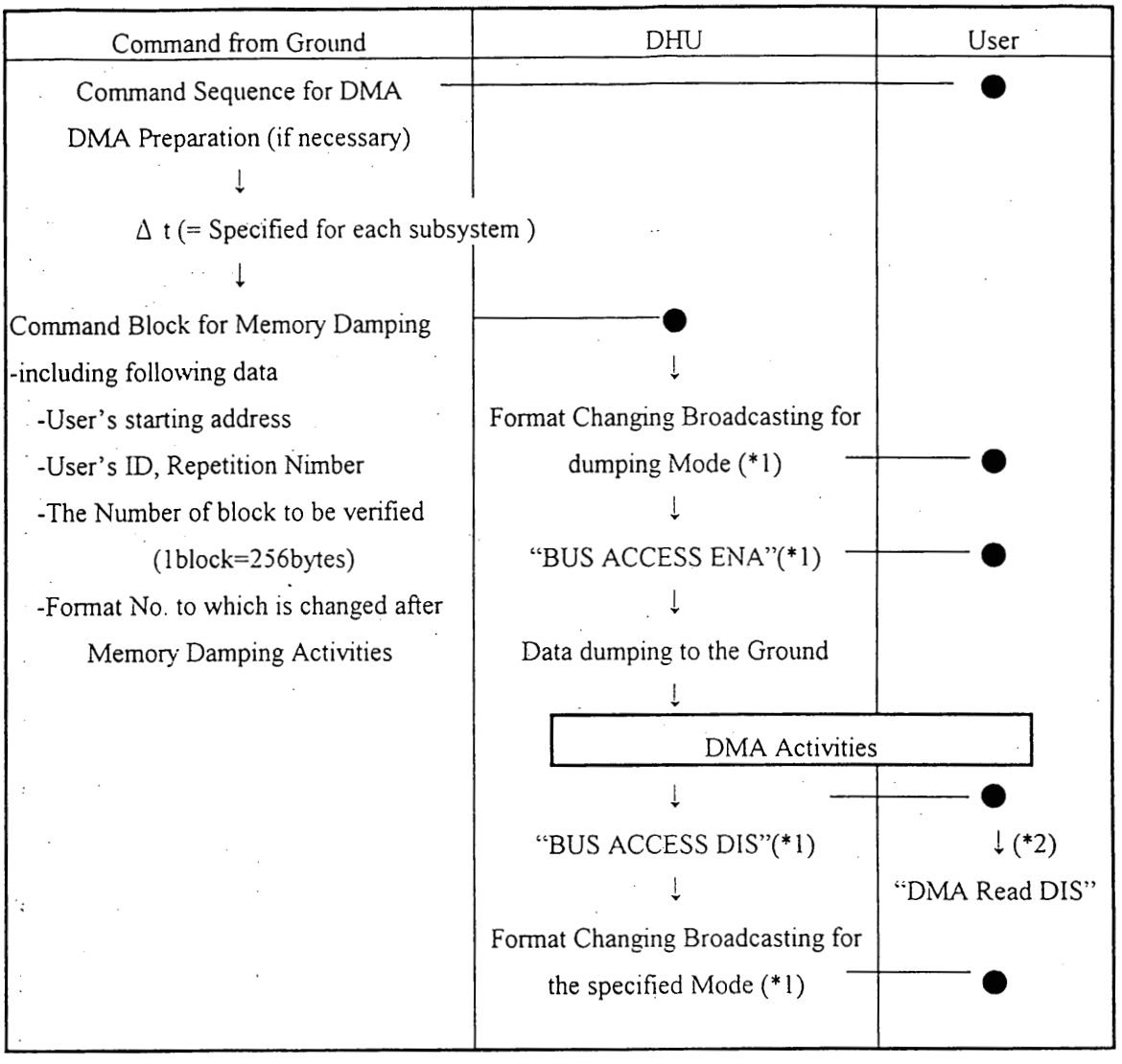

*1-This command is generated by DHU. *2-This is done by a user.

Figure 4.1.3-3 Command Sequence for Dumping on Onboard Memory

(4) Initial Uploading

The onboard program for the component which has no ROM for it will be initially uploaded from the BFM. The procedure is shown in figure 4.1.3-4.

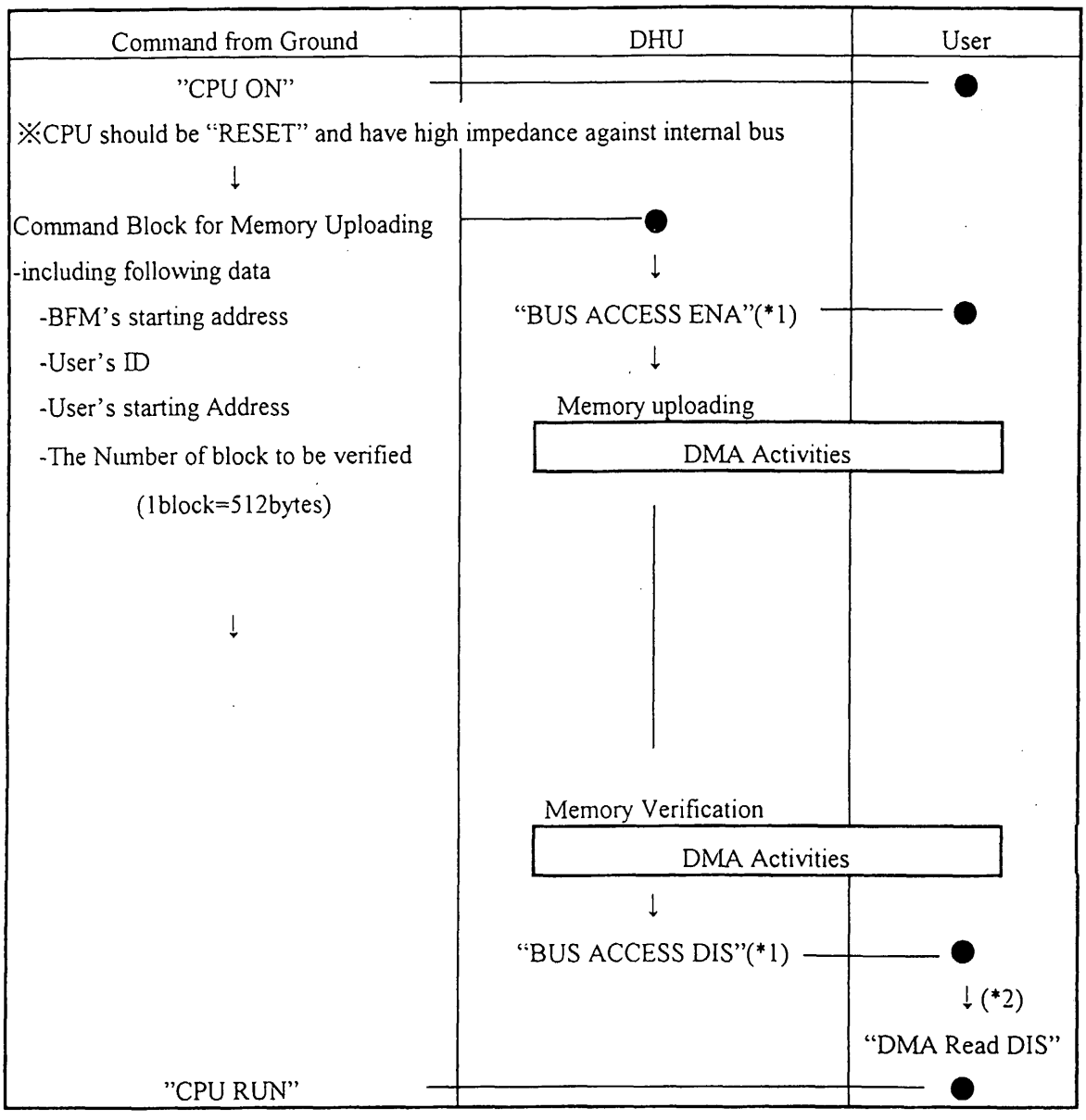

*1-This command is generated by DHU. *2-This is done by a user.

Figure 4.1.3-4 Command Sequence for Initial Uploading

4.1.2 Autonomous Control System

The data handling system in PLANET-B has the function of onboard command generation without any command from the ground. For each onboard generated command, either of the two statuses, "ENABLE" or "DISABLE", can be selected.

(1) UVC (Under Voltage Control)

In the case of power shortage, DHU issues the UVC command sequence and restricts onboard power consumption. DHU sends "STAND-BY" or "OFF" command to specified subsystems to curb power consumptiopn under any of the following conditions:

(A) Battery is discharging in sunlit condition.
(B) Overdischarge of battery is estimated in shadow.
(C) Battery is in an overdischarge status.

(2) Request OG

DHU, upon a request from its users, issues a RQOG (Request OG). Eight RQOGs are available for users. The RQOG has the same structure as an OG without the restruiction of 5byte BC data length (13 bytes for OG). The propriety of the request code is checked with the "request code control table".

(3) Autonomous OG

If HK telemetry should fail to satisfy some conditions, the DHU issues an ATOG (Autonomous OG). Sixteen ATOGs are available for users. The ATOG has the same structure as an RQOG without consisting of 31 command elements (16 elements for RQOG). The conditions of ATOG are identified by the "autonomous control table". DHU monitors HK telemetry every 64 seconds for this function.

(4) Broadcasting

Receiving the following command from the ground, DHU sends to all PIMs.

(A) Data Edition Mode Change Information (Bit Rate / Edition Format#)
(B) TI Counter Set

4.1.3 Data Handling

The telemetry data prepared in a basic unit (=432bytes =1packet) by each subsystem is sent to DHU through the data bus and PIM identification code is added to each packet by DHU. Besides the above-mentioned "mission packet", there is what is called "HK packet" for monitoring spacecraft housekeeping data on the ground. For the HK packet, DHU collects necessary data from each PIM. Each PIM identifies either mission packet or HK packet with its telemetry edition address. The telemetry edition mode is specified by bit rate and packet collection pattern. For changing the mode, DHU sends a broadcasting command to all PIMs.

One of the following three modes can be selected:

1) Transmit all the data to the ground on a real time basis
2) Storage all the data in the Data Recorder (DR).
3) Store all the data in the DR and transmit a part of the data to the ground

Each of three modes has two alternatives: with or without simultaneous reproduction of DR data. The configuration of transfer frame is shown in figure 4.1.3-1.

(1) HK Packet

HK packet consists of the telemetry data necessary for spacecraft housekeeping. SI's provide the data to be included in HK packet at the time of HK packet data collection.

(2) Mission Packet

The telemetry packet specified for each SI's PIM is called "Mission Packet". The internal configuration of mission packet can be basically determined freely by SI side. To be concrete, mission packet can consist only of mission data, or include mission's HK data at SI's convenience of ground data handling. And, of course, mission packet include time information for mission use.

(3) CLCW (Command Link Control Word)

PLANET-B command operation system has an error correcting code function and uplink information is included in telemetry packet. The uplink information is called CLCW (Command Link Control Word) including the lock status, retransmission requirement flag and retransmission frame number. Based on the CLCW information, if necessary, the ground station can retransmit the command data. But in the PLANET-B case, from the view point of transmission time saving, the original command data is transmitted twice.

On the other hand, DHU has memory area for storing command blocks (1300 blocks) and has the command execution hysteresis data (Sending time, IC and DC/BC (max5) data). These data are, basically, used only for trouble shooting. For transmitting these data, telemetry edition format must be changed, and hysterisis area must be dumped.

*(X) : A number of bit in the section.

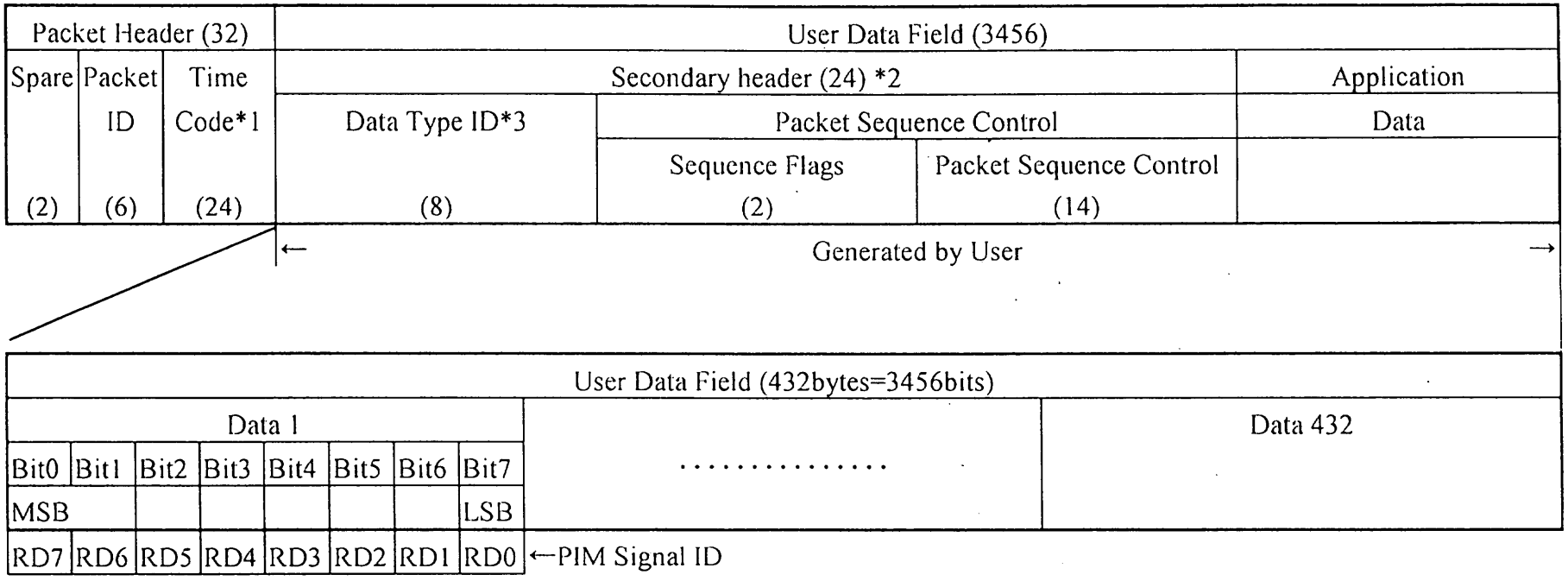

*1- MSB=524288sec, LSB=31.25msec

*2-Each User can use the secondary header, if necessary. Use or Nouse is decided as each packet ID.

*3- The detail of "Data Type ID" is TBD.

Figure 4.1.3-1 Telemetry Format Construction (2/2)

*(X) : A number of bit in the section.

Sync Marker "1ACFFC1D"h (32)	Channel Access Slot (4064)

Transfer Frame Header (48)						Packet Data (3488)		CLCW(16)									Reed Solomon Check Symbol
Ver. No.	VCDU ID (14)		Virtual ch. Unit Count	Signalling Field (8)		Packet Header	User Data Field	CMD Bit Look	SBR-A SQ	SBR-B SQ	CMD Dec Lock	CMD Dec Error	Bir Rate HI/Low	Rec Sel	CMD Retransmit Request	Frame No.	
	Space craft ID	Virtual ch. ID		Replay Flag	Spare												
(2)	(8)	(6)	(24)	(1)	(7)	(32)	(3456)	(1)	(1)	(1)	(1)	(1)	(1)	(1)	(1)	(8)	(512)

Figure 4.1.3-1 Telemetry Format Construction (1/2)

4. 2 Command Decoder (CMD)

I. Nakatani, M. Hashimoto (ISAS)
NEC Corporation

4. 2. 1 Overview

A Command Decoder(CMD) consists of a Command Demodulator and a Command Data Decoder. The Command Demodulator selects a command base band signal from the two S band receivers, and demodulates it. The Command Data Decoder decodes the demodulated data and outputs the result to the Data Handling Unit(DHU).

4. 2. 2 Function

The block diagram of Command Decoder is shown in figure 4.2-1. The functions and operation of each instrument are described in the following sections.

4.2.2.1 Command Demodulator

(1) Receiver Selector has input of the command base band signals from the two S band receivers, and outputs one command base band signal to the Subcarrier Synchronizer by Lock Detector status.

(2) Subcarrier Synchronizer detects the 4000Hz subcarrier from the command base band signal, and regenarates and demodulates the subcarrier.

(3) Lock Detector watches Subcarrier Synchronizer status and selects an S band receiver by detected 4000Hz subcarrier.

(4) Bit Synchronizer regenarates bit timing from the demodulated subcarrier signal and detects data.
Bit Synchronizer 1 detects 125bps data and Bit Synchronizer 2 detects 15.625bps data.

(5) Data Detector watches two Bit Synchronizers demodulation status and outputs bitrate selection signal to the Bit Clock Changer.

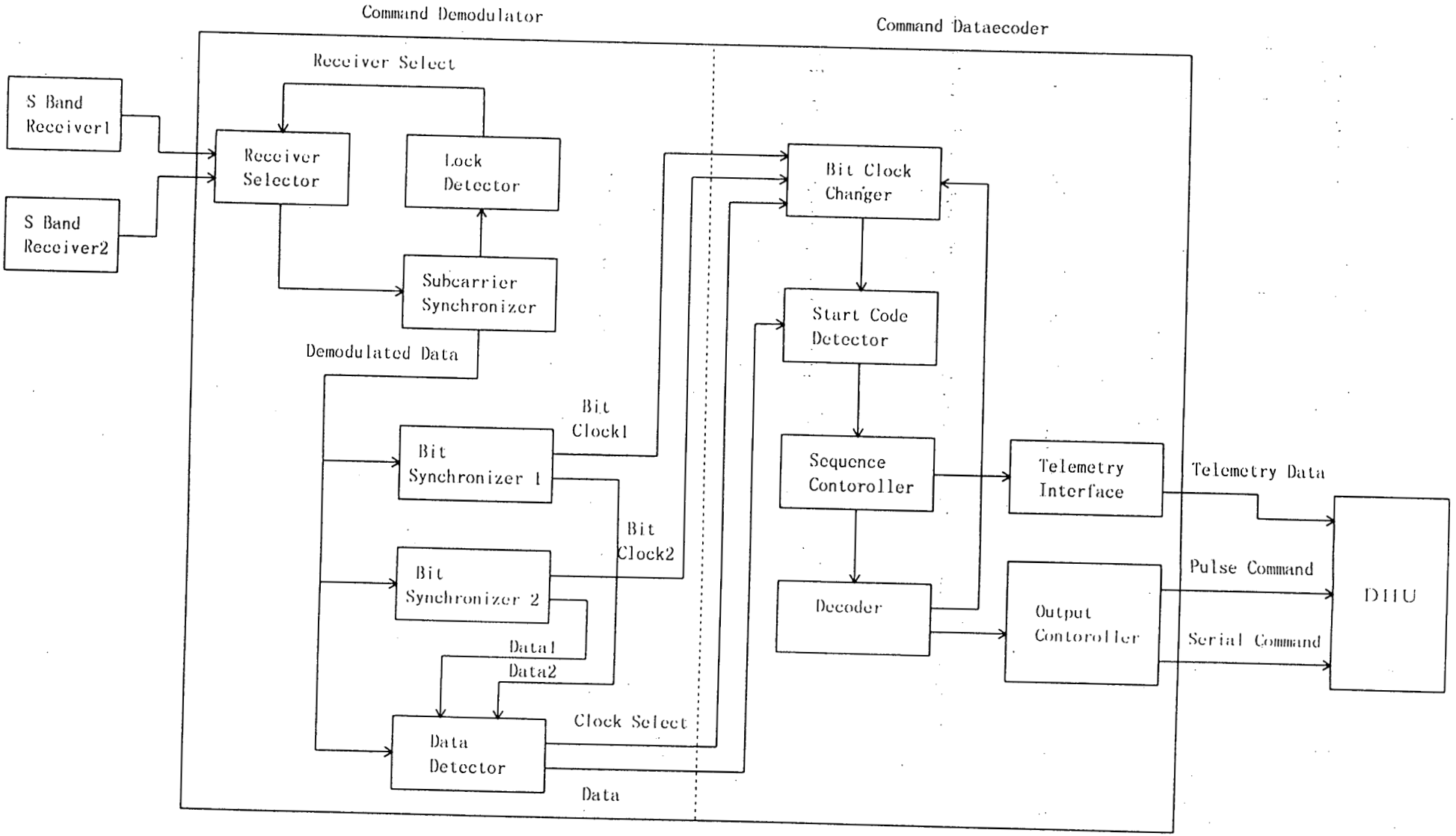

Figure 4.2-1 Command Decoder Block Diagram

4.2.2.2 Command Data Decoder

(1) Bit Clock Changer selects a bit timing using the signal from Data Detector.

(2) Start Code Detector detects frame Synchronization data and outputs start signal to the Sequence Controller.

(3) Sequence Controller genarates decoding signals for command data and outputs these signals to the Decoder.

(4) Decoder decodes the PN code command data, and conducts error detection and error correction.

(5) Output Controller genarates timing signals for the DHU and outputs decoded data to the DHU.

(6) Telemetry Interface outputs Command Link Control Word and status to the DHU.

4.2.2.3 Performance

The principal specification of Command Decoder are shown in table 4.2-1

Table 4.2-1 Principal Specification of Command Decoder

	Item	Specification
Electrical Specification	Subcarrier Modulation	PCM(PN) - NRZ/L - PSK
	Input Signal Level	0.19Vrms ± 2dB
	Subcarrier Frequency	4000Hz
	Bit rate	125 bps 15.625 bps
	Command Format	See figure 4.2-2
	Command Output	
	(1)Serial Command	Command Data 1 Command Clock 1 Command Enable 1
	(2)Pulse Command	DHU ON 1 DHU OFF 1
	Telemetry Output	Telemetry Data 16 bit Bit Lock ON/OFF 1 bit SBR-A SQ ON/OFF 1 bit SBR-B SQ ON/OFF 1 bit CMD Lock ON/OFF 1 bit Data Error 1 bit Bit Rate HI/LO 1 bit Receiver Select 1 bit Request Signal 1 bit Command Link Control Word 8 bit
	Power Consumption	2.5 W ± 0.3 W
Mechanical Specification	External view	See figure 4.2-3
	Weight	1.9 Kg ± 0.2 Kg

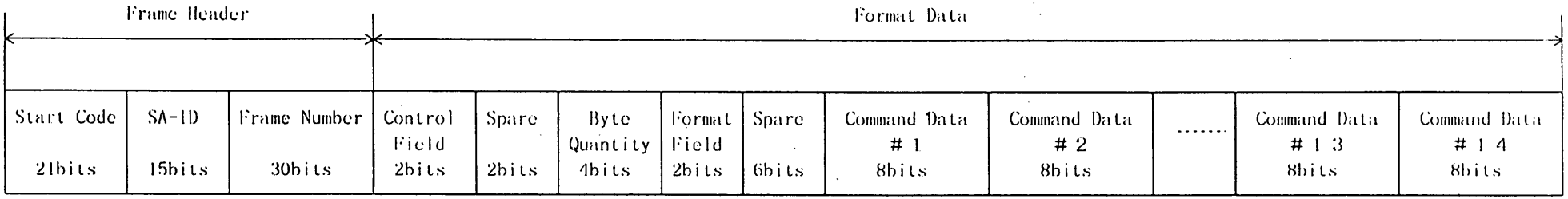

(a) Command Frame

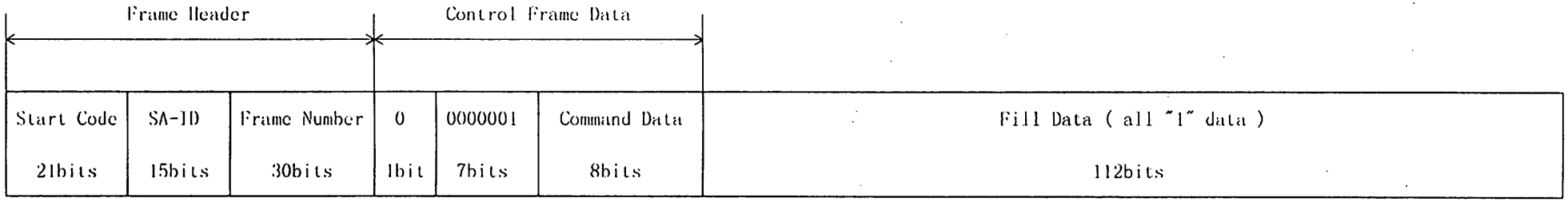

(b) Control Command Frame

Figure 4.2−2 Command Format

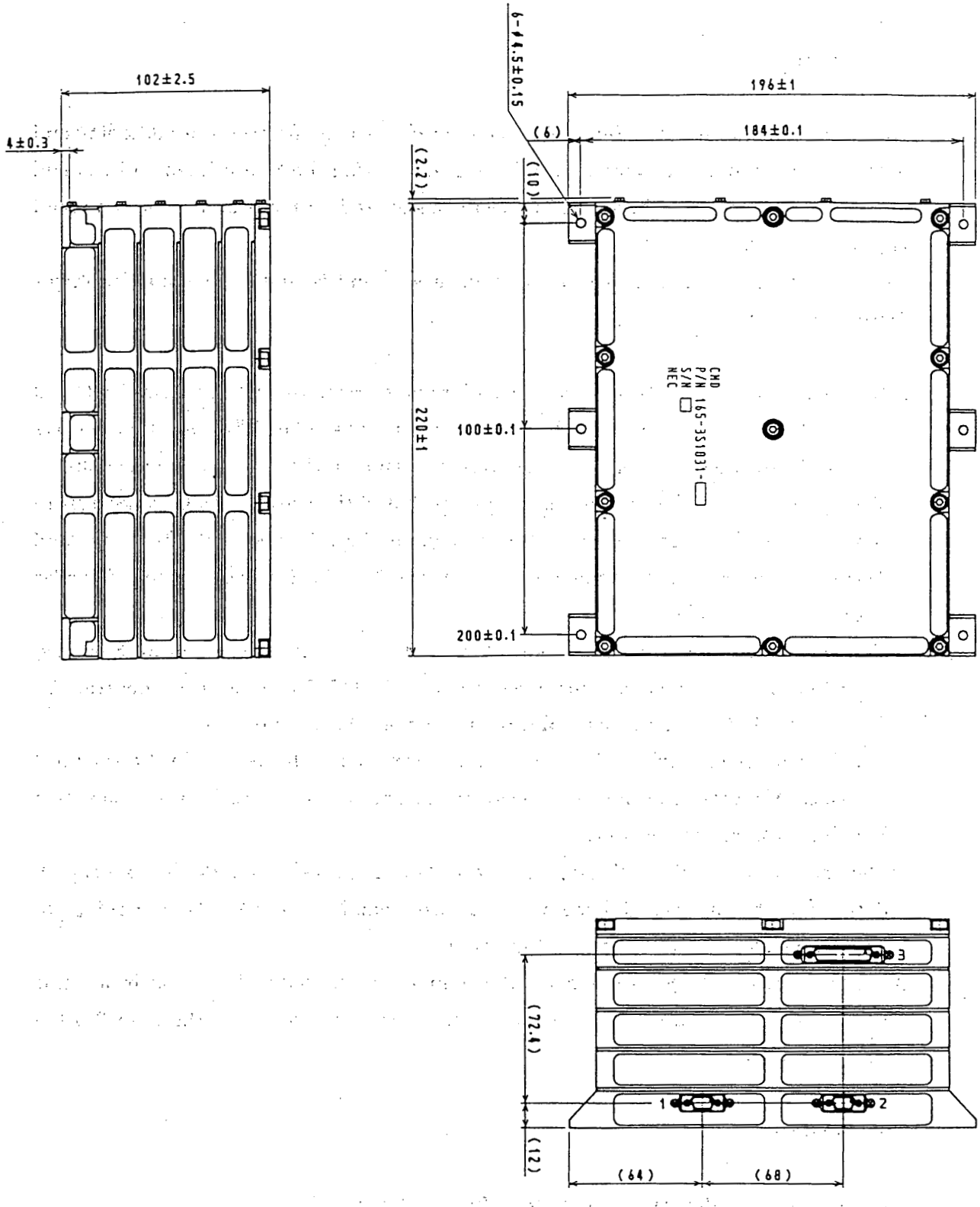

Figure4. 2−3 External View of CMD

4.3 Data Handling Unit(DHU)

4.3.1 Overview

DHU manages all the subsystems of the spacecraft. Its main functions are decoding and executing the uplink command and collecting and editing the House Keeping Data and the Mission data via the Data Bus. The Data Bus is used for transferring the command and telemetry data.
Dhu adopts surface mount method to achieve size and weight reductions. Its major features are follows:

a) DHU has a serial Data Bus which is used for transferring the data between DHU and user system to realize light weight Data Handling subsystem. The Data Bus consists of Bus Master Clock, Supervisory bus (control bus) and Response Bus (Return bus).
b) The uplink command format is changed from that of the previous ISAS spacecraft to improve uplink command rate. The command data is made of the Command Transmission Track.The Command Transmission Track consists of 2 bytes of header data and 14 bytes of command data
c) The downlink telemetry format is conformed to AOS(Advanced Orbiting Systems) Transfer Frame format recommended by the CCSDS(Consultative Committee for Space Data Systems),and adopts RS(Reed Solomon)code as outercode.
d) The user interface between the data handling system and the user, is PIM(Peripheral Interface Module). This makes it easy to design the interface between the data handling system and the user.
e) The data are transmitted through the Data Bus and packets. And the house keeping data and the mission telemetry data are sampled as packets according to programmable packet sequence data in DHU.
f) For the previous ISAS satellites uplink command is decoded by DHU Hardware. But in PLANET-B it is decoded by software on 80C86 CPU to realize the high flexible command operation

4.3.2 Functions

The function block diagram of DHU is outlined in figure 4.3-1.
DHU consists of modules such as CPU Module (CPM), Command Interface Module(CMDIF),Bus Control Module(BCNT), Status Encoding Module, Telemetry Processor Module(TLMP), Backup File Memory(BFM) and several interfaces including the Data Bus interface.
The functions and operations of each module are described in the following sections.

4.3.2.1 CPU Module (CPM)

CPM consists of 2 redundant CPU boards, Common Memory and Local Bus arbitrator. Each CPU has interrupt controller, timer, serial interface, and Local Memory.

When Power On or CPU Reset command is executed, DHU state turns into IPL mode. In IPL mode, DHU executes redundant CPU switching command and basic DHU commands, and OS (Operating System) and AP (Application program) can be loaded on CPU. By "Normal Mode Run" command, DHU status is changed to Normal mode. In Normal mode CPU operates following functions.

a) Decoding the uplink command.
b) Generating the time specified command.
c) Generating and executing automatic commands (OP/OG operation).
d) Monitoring telemetry and generating autonomous command.
e) Processing command priority to avoid cross-talk.
f) Encoding DHU status telemetry.
g) Receiving Request Code and generating request command.

CPM takes following measures to prevent malfunction and to find anomaly to increase reliability.

a) Use of SEC-DEC (Single Error Collect – Double Error Detect) code in RAM.
b) Supervision of CPU action W.D.T. (Watch Dog Timer).
c) Detection irregular memory address access.

4.3.2.2 Command Interface Module (CMDIF)

The commands that is demodulated and coded in CMD, is sent to DHU. The interface between CMD and DHU is serial. In CMDIF, the bit length of the command data is checked and it is stored in command interface buffer.

4.3.2.3 Bus Control Module (BCNT)

BCNT is a bus controller of the data bus protocol, and generates the data bus timing. The data bus timing consists of the Telemetry Window (31.25ms) and the Command Window (31.25ms).

In the Telemetry Window, BCNT reads telemetry collecting message from TLMP (Telemetry Processor Module) and sends it to PIM via the supervisory bus. The sampled telemetry data is returned from PIM via the response bus as the response bus message and sent to TLMP. In the Command Window, BCNT reads command message from CPM and sends it to PIM via supervisory bus. The PIM returns the command acknowledge data to BCNT via the response bus, and BCNT sends the command answer to CPM.

ODD parity and PIM ID are included in both bus messages, and checked at the PIM and BCNT. The message format is shown in figure 4.3-2. If parity error or PIM ID error appears in the supervisory bus or response bus, BCNT retries to send the message until the right answer is obtained within the defined time. After the defined time, BCNT rejects the retrying command.

Each window consists of repetition of the Polling slot (15.3usec), the Control slot (15.3usec) and the Dummy slot (15.3usec). BCNT sends the supervisory bus message in the Control slot. In Polling slot, BCNT collects the user request code and sends them to CPM. If a user requests programmed operations (commands issue, data transmission, etc.) to DHU, the user issues the request code and the request pulse to PIM. DHU reads the request code in Polling slot, and the request code triggers the generation of automatic commands and bus operations.

4.3.2.4 Status Encoding Module

Status Encoding Module consists of telemetry collection module of PIM. The DHU's telemetry data is collected by the telemetry collection module, and sent to TLMP via PIM of STM and the Data Bus.

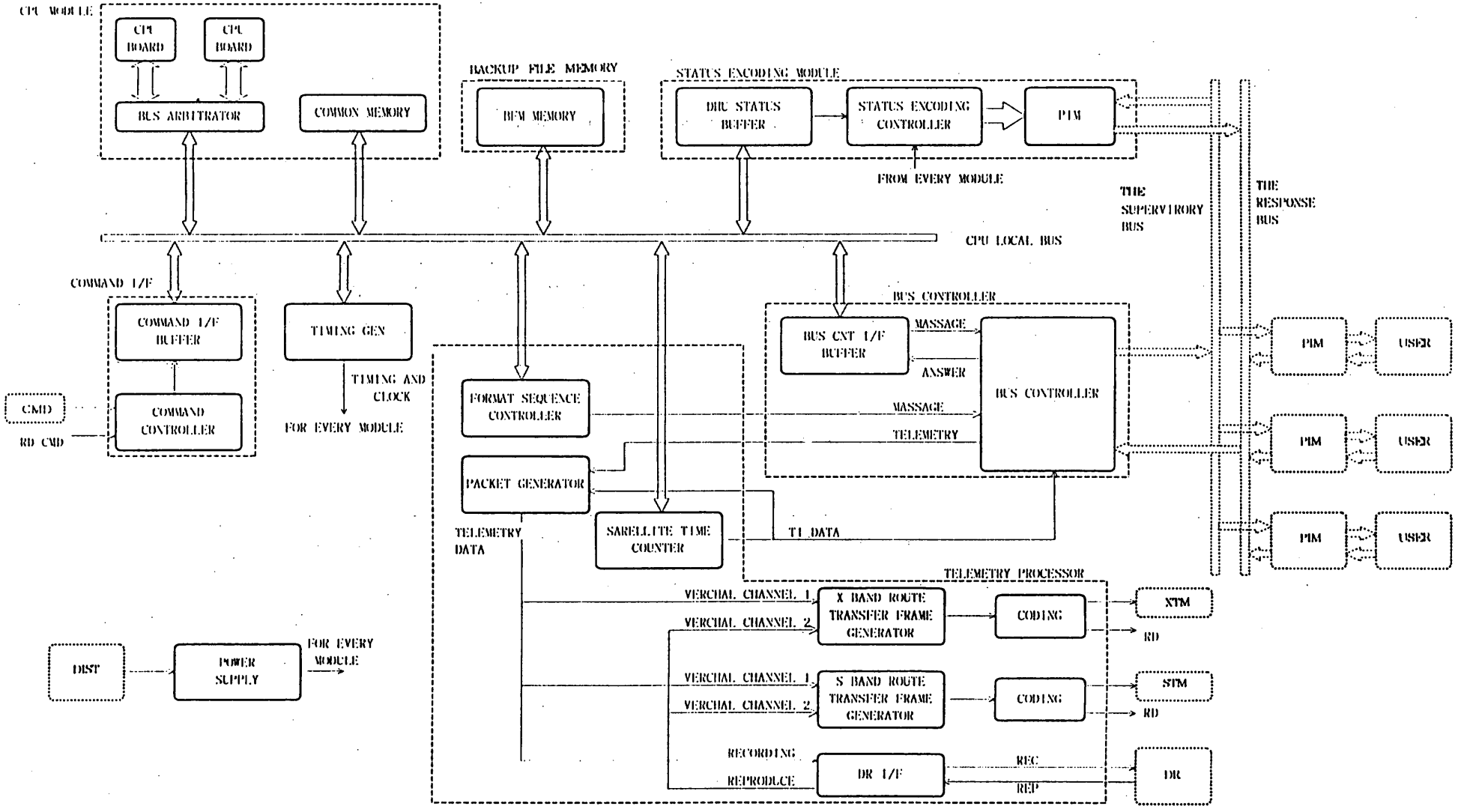

Figure 4.3-1 Block Diagram of Data Handling Unit

The Supervisory Bus Message

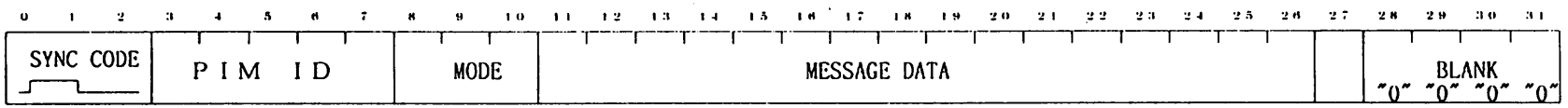

The Response Bus Message

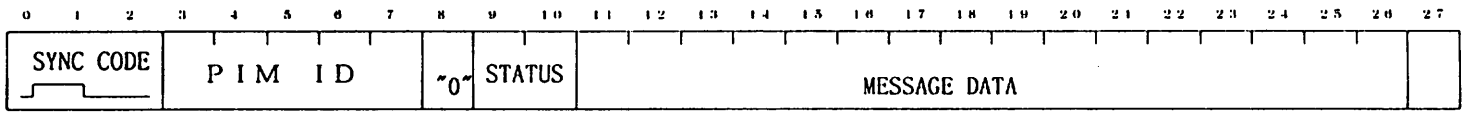

Figure 4.3-2 The Data Bus Message Format

4.3.2.5 Telemetry Processor Module (TLMP)

TLMP generates telemetry data. The telemetry data is collected from users, according to the packet sequence data. This packet sequence data has 64 packet formats and 32 sampling sequence formats (MAX) that can be programmed after words. These formats can be set by uplink command from the ground. As DHU has many formats, to flex telemetry collection is possible according to requests from SIS. The collected telemetry data via the Data Bus is edited as house keeping packets or as mission data packets. These packets are sent to DR (Rata Recorder) as recording telemetry.

In PLANET-B, the downlink telemetry format is conformed to AOS (Advanced Orbiting Systems) Transfer Frame format that recommended by the CCSDS (Consulting Committee for Space Data Systems).

Packet sampling rate and telemetry bit-rate can be set independently by command. When telemetry bit-rate is slower than packet sampling rate, Transfer Frame Generator reduces some frame.

TLMP has two independent Transfer Frame Generators: S band and X band routes.

The X band and S band routes are switched to either real time or reproduced telemetry from the DR.

Each Generator includes RS(255,223) encoder to reduce bit-error-rate.

Satellite time counter maintains relative time as TI(Time indicator) and supplies 2^26 to 2^.5 seconds TI data (1553days at maximum).

4.3.2.6 Backup File Memory (BFM)

BFM consists of EEPROM, that is allocated on CPM local bus. BFM stores user program data and these data can be written through uplink command. In user program writing mode, DHU sends user program data stored in BFM to user and verifies both stored data in BFM and user data.

4.3.2.7 Interface

The main Interfaces of DHU are as follows.

a)Data Bus Interface

The telemetry and command interface between DHU and each instrument adopts the standard data bus interface, described as follows.

DHU doesn't have the direct user interface, but PIM has one. DHU and PIM are connected with the serial data bus, and the Data Bus consists of the Bus Master Clock, the Supervisory bus and the Response Bus.

The Bus Master Clock supplies fundamental clock of PIM and is used for transmitting the Supervisory Bus Message. The Supervisory Bus controls the data bus protocol and PIM. PIM writes to or reads from user instrument according to the Supervisory Bus Message. PIM sends user's read data and command acknowledge to DHU via the Response Bus according to the Supervisory Bus Message.

b)Command Interface

The uplink command interface is serial data interface from the CMD (Command Decoder). This interface consists of Enable, Clock and Data Signals, and 128 bits / 1 Command Transmission Track is sent continuously.

c)The Telemetry Interface

The Downlink telemetry (the transfer frame) encoded by TLMP is coded as follows

both S band route and X band rote

64bps to 2048bps : NRZ-L -> NRZ-S -> CONV -> PSK

4096bps to 32768bps : NRZ-L -> NRZ-S -> CONV -> Bi ϕ -L

The telemetry data is converted into NRZ-S, and then coded by error correction code as inner code. The coding process employs convolution code (GSFC format) with restriction length K=7 and coding rate R=1/2, by Viterbi decoding algorithm. Coded signals are converted into Bi ϕ -L or undergo PSK modulation.

d)Umbilical Command Interface

DHU has umbilical interface. It uses umbilical line for high speed writing of program, etc. The interface receives serial commands same as the uplink command by a differential receiver.

This interface sends downlink telemetry that are converted into Bi ϕ -M by the differential driver.

This interface is only used on the ground, and is turned off just before launch in order to prevent malfunction.

4.3.2.8 Performance

The major specifications of DHU are shown in table 4.3-1 and the external view is shown in figure 4.3-3.

Table 4.3-1 Principal Specification of DHU

ITEM	DIMENSION
1) REAL TIME COMMAND	
DATA ORGANIZATION	8 bits/Word 16 Word/Command Transnission Track
2) PROGRAM COMMAND	
OPERATION PROGRAM(OP)	512 CE's/OP
CONTROL ELEMENT(CE)	1 CE consists 1 OG and 1 Interval Time
ORGANIZED COMMAND(OG)	1 OG consists 16 sets of "IC" and "Command Block"
INTERVAL TIME	1 sec ~ 3825 sec (LSB = 15 sec)
3) DOWN LINK TELEMETRY FORMAT	
DATA ORGANIZATION	8 bits/Word 512 Word/Transfer Frame
DATA FORMAT	CCSDS AOS Transfer Frame Format 2 Transfer Frame Generator
VIRTUAL CHANNEL	3 Channnel (Include FILL Frame)
ERROR CORRECTION	RS(255,223) Encoding (outer code) VERCHAL FILL : 2 SYMBOL/FRAME INTERLEAVE : 2 Convolution Encoding (inner code)
DATA CONVERSION	Both S Band Route and X Band Route 64bps to 1024bps NRZ-L→NRZ-M→CONV→PSK(Subcarrier FREQ. 8192Hz) 2048bps to 32768bps NRZ-L→NRZ-M→CONV→Biϕ-L
TELEMETRY SAMPLING RATE	64bps to 65536bps
4)Data BUS INTERFACE	
BUS MASTER CLOCK FREQ.	4194304Hz(nominal)
SUPERVISORY BUS ORGANIZATION	32 bits/1 slot 2097152bps Diffrential Interface (RS-485)
SUPERVISORY BUS MESSAGE LENGTH	32 bits/1 message
RESPONSE BUS MESSAGE LENGTH	28 bits/1 message
5)POWER CONSUMPTION	CPU OFF : 5.5W CPU A ON : 6.5W CPU A/B ON : 7.5W
6)WEIGHT	4.0kg (nominal)
7)SIZE	220mm × 170mm × 121.6mm

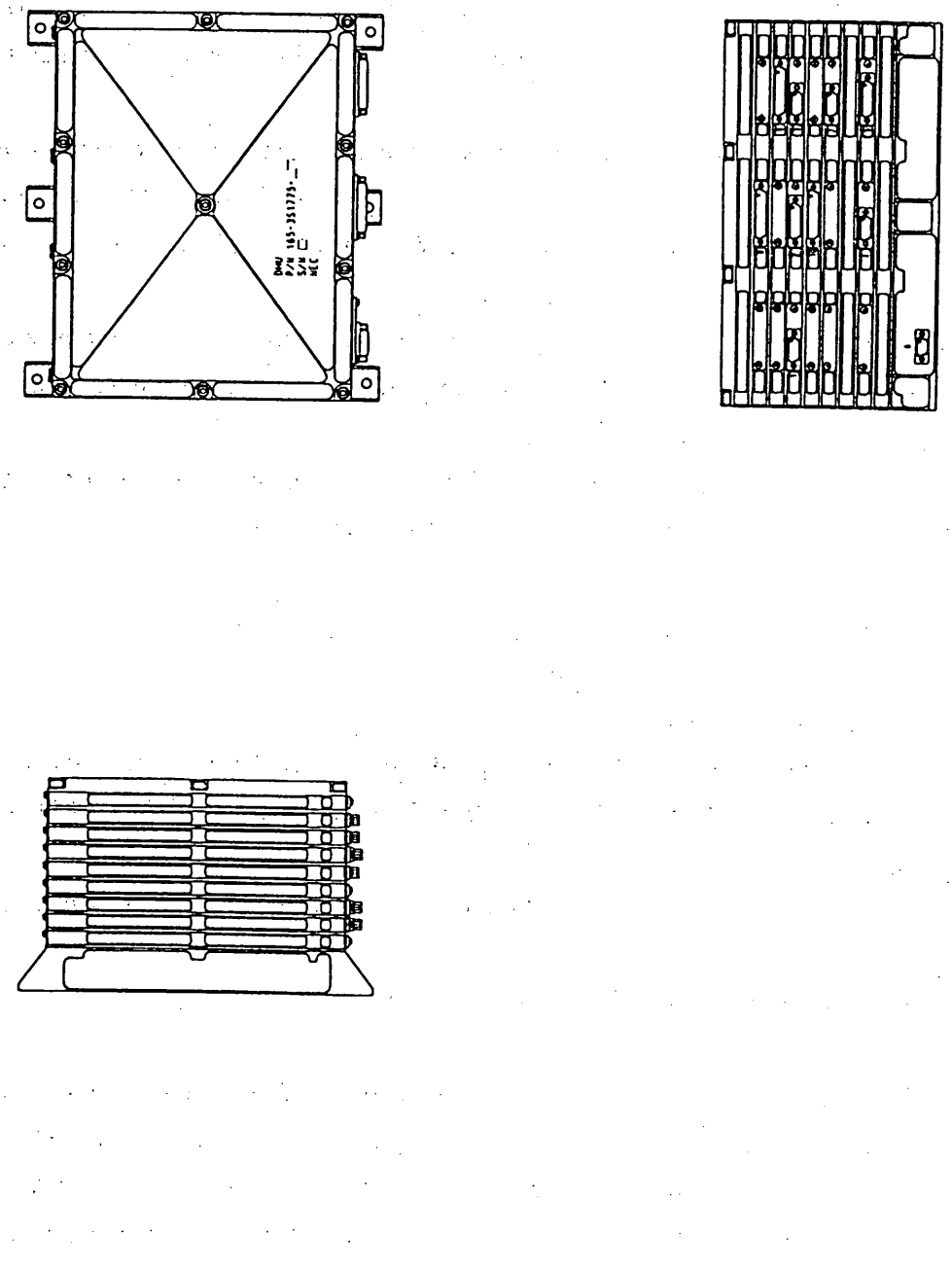

Figure 4.3-3 External View of DHU

4.4 Periphral Interface Module (PIM)

4.4.1 Overview

PIM is remote terminal of DHU to connect between the Data Handling Subsystem and the user equipment. PIM's main hardware consists of only 2 IC(FPGA)s and line driver/receiver to realize small and light weight user interface. Its principal features are as follows:

a) PIM receives and decodes the supervisory bus message, and writes command or reads telemetry according to the supervisory bus message from DHU. PIM sends answer or telemetry data to DHU via the Response Bus. The fundamental clock of PIM is supplied by the Bus Master Clock.
b) The interface between the data handling subsystem and the user equipment is a unified to standard one. PIM has a standard user interface that is similar to as CPU local bus several pulse signals.
c) PIM has a time counter that supplies the TI data for users, and this counter is calibrated by the time calibration command from DHU via the Data Bus.

4.4.2 Functions

The functional block diagram of PIM is in figure 4.4-1
PIM consists of Supervisory Bus Message Decoder(S-BUS DBC), User Interface(USR I/F), Status Register(STS REG) and Response Bus Message Encoder(R-BUS ENC) and TI counter(TIC).
The functions and operations of each module are described in the following sections.

4.4.2.1 Supervisory Bus Message Decoder(S-BUS DEC)

In this Module, the Supervisory Bus Message is synchronized, and then compared with PIM ID(PIM Identifier Number : this Number is unique and assigned to each PIM) and the parity is checked. PIM responses with the message that is equal to its own PIM ID. When these checks are correct, PIM returns telemetry data or command acknowledge. If the PIM ID in the message is correct and the message has parity error, PIM returns parity error flag in the message, and then a correct message is decoded.
The message for PIM itself is executed and the message for user is sent to USR I/F. The command message that has PIM ID = '11111'(bin) means broadcast command, and every PIM response to this message. But when PIM receives the broadcast command, every PIM doesn't return acknowledge.

4.4.2.2 User Interface(USR I/F)

The message for the user is decoded and translated for the user interface signals similar to the CPU local bus. USR I/F writes command message for user or reads the user telemetry according to the massage from S-BUS DEC. And the telemetry data that is read from user is sent to R-BUS ENC.

4.4.2.3 Response Bus Message Encoder(R-BUS ENC)

In R-BUS ENC, the Response Bus message is generated for the acknowledge and telemetry according to the result of checking in SUPDEC. The output driver is enabled only when its own PIM is selected by the Supervisory Bus Message.
The Response Bus Message has ODD parity to transmit the more reliable data.

4.4.2.4 TI Counter (TIC)

TIC has a time counter in each PIM, that is counted by the Bus Master Clock. So each PIM's time is synchronized with that of the DHU. The time counter is presented to the master satellite time in DHU by the time that is set by the broadcast command from DHU. The time count data is supplied to user as the TI data.

4.4.2.5 Interface

PIM has 2 interface, one is the Data Bus interface and the other one is user interface. In the Data Bus interface, PIM has input terminals of the Bus Master Clock and the Supervisory bus, and the Response Bus output terminal. These signals use differential interface.
The user interface is described in Figure 4.4-2 and Table 4.4-1. I/O in the table denotes the input to the PIM or the output from the view point of the PIM. The PIM and its user are connected by 51-pin MDM connector.

4.4.2.6 Performance

The major specification of PIM are shown in table 4.4-2 and the external view is shown in figure 4.3-3.

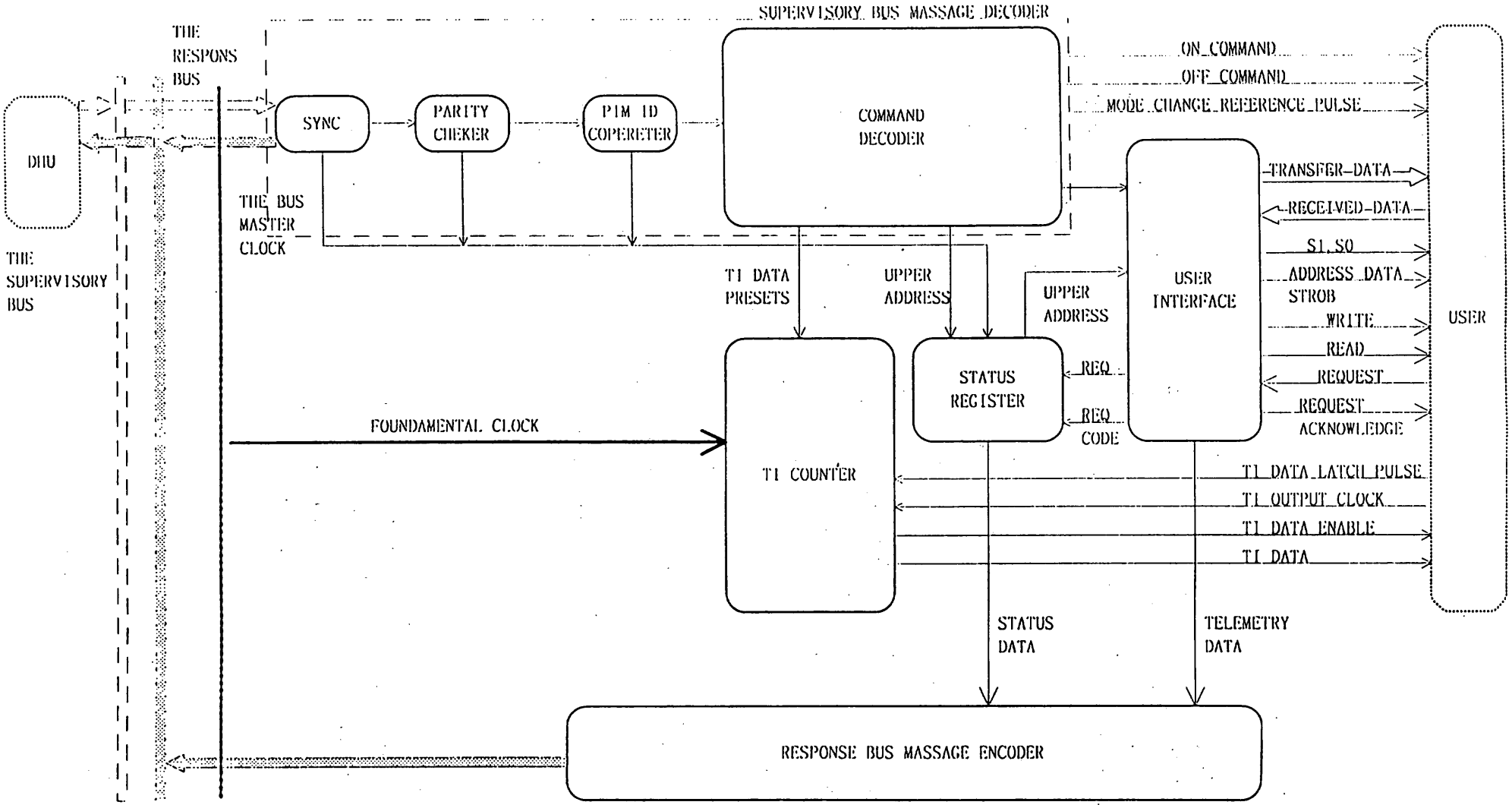

Figure 4.4-1 Block diagram of Peripheral Interface Module

Table 4.4-1 User Interface Signal Description (1/3)

<table>
<tr><th>ABBREV</th><th>SIGNAL NAME</th><th>I/O</th><th>FUNCTION</th><th>PIN NO</th></tr>
<tr><td>TD15</td><td>Direct access flag</td><td>O</td><td>(Transfer Data)
This signal shows that the PIM accesses the user's CPU bus with DA (Direct Access)=1" or NDA (Non Direct Access)="0". DA means that the PIM occupies the user's CPU bus and accesses directly to the program memory. In DA the PIM outputs arbitration command (BUS ACCESS ENA, DIS).
NDA means that the PIM accesses when writting commands and reading telemetry area (ex. exclusive I/O or memory for the PIM)."</td><td rowspan="3">※1</td></tr>
<tr><td>TD14~8</td><td>High-address data (7bit)
MSB:TD14
LSB: TD8</td><td>O</td><td>(Transfer Data)
The higher address of TD14-8 is added to the lower address of TD7-0 to make total 15bits address data.</td></tr>
<tr><td>TD7~0</td><td>Command /low-address data (8bit)
MSB: TD7
LSB: TD0</td><td>O</td><td>(Transfer Data)
TD7-0 bus is used to output both command and lower address from the PIM to the users. When the PIM reads the user data, lower address is continuously output in one access. When the PIM writes data to the user, lower address and command data are sequentially output in one access.</td></tr>
<tr><td>RD7~0</td><td>Telemetry data /user request data (8bit)
MSB: RD7
LSB: RD0</td><td>I</td><td>(Received Data)
RD7-0 bus is used to input the user telemetry data or the user request data from the user to the PIM.</td><td>※2</td></tr>
<tr><td>S1,0</td><td>Status1,0</td><td>O</td><td>(Status1,0)
This shows the status of TD15-0 in combination of S1 and S0.
<table>
<tr><th>S1</th><th>S0</th><th>STATUS</th></tr>
<tr><td rowspan="2">1</td><td>1</td><td>DC command write</td></tr>
<tr><td>0</td><td>BC command write</td></tr>
<tr><td rowspan="2">0</td><td>1</td><td>Read from Status register, DPRAM</td></tr>
<tr><td>0</td><td>INT write (ECW,EMR)</td></tr>
</table>
DC-Immediately executed after it has been decoded by the user. (first byte of command block)
BC-Used to set the user parameters and to load the programs.</td><td>S1:25
S0:42</td></tr>
</table>

Table 4.4-1 User Interface Signal Description (2/3)

ABBREV	SIGNAL NAME	I/O	FUNCTION	PIN NO
ADRS STB	Address data strobe	O	(Address Data Strobe) ADRS STB is the strobe signal for latching the lower address TD7-0. The user should latch the address at a negative edge of ADRS STB.	8
WR	Write	O	(Write) The WR signal is output when the user I/O or memory is written in.	26
RD	Read	O	(Read) The RD signal is output when the data to the user I/O or memory is read out. The PIM latches RD data at a negative edge.	43
REQ	Request	I	(Request) When the user wants to execute the user request processed that has been already registered to DHU, the user writes request code address FF01 and sets the REQ signal to the high level. The user can verify by the REQ ACK signal from the PIM. whether the request is accepted or not. The REQ signal should be kept at the high-level until the REQ ACK is set. Before using this function, the user should register the user request code to DHU.	11
REQ ACK	Request acknowledge	O	(Request Acknowledge) The REQ ACK is output when DHU accepts the request and finishes request sequence. The user resets the REQ signal to the low-level by synchronizing REQ ACK (positive edge).	10
TI LCH	TI data latch pulse	I	(TI Data Latch Pulse) The user uses the TI LCH signal to latch the PIM time counter value (TI23-0) at the timing when the user needs to get the data.	29
TI CLK	TI output clock	I	(TI Output Clock) The clock is input from the user in order to output the serial time data latched by the TI LCH. It is no problem that the user always outputs this signal.	46
TI DATA ENA	TI data enable	O	(TI Data Enable) When the TI data (TI23-0) is output from the PIM, the PIM sets this signal in the high-level.	28

Table 4.4-1 User Interface Signal Description (3/3)

ABBREV	SIGNAL NAME	I/O	FUNCTION	PIN NO
TI DATA	TI data	O	(TI Data) When the user requests the time counter data distribution, the TI data (TI23-0) is output to the user serially (MSB first) from the PIM by being synchronized with the clock input from the user.	45
MCRP	Mode change reference pulse	O	(Mode Change Reference Pulse) The DHU outputs this signal at the head of the every telemetry collect sequence. The user should change own observation mode based on format/bit-rate information by synchronizing this signal. The major frame quantity of telemetry collect sequence is variable.	9
ON CMD	On command	O	(On Command) This signal is used for turning on the user main switch (relay). The pulse width of this signal is 25±5msec. Since this is CMOS interface, the user should have relay drive circuit.	27
OFF CMD	Off command	O	(Off Command) This signal is used for turning off the user main switch (relay). The pulse width of this signal is 25±5msec. Since this is CMOS interface, the user should have relay drive circuit.	44
+5V	+5V	I	(+5V) The user provides the PIM with +5V stabilized power.	34
COM(2)	COM(2)	I	(COM(2)) The user provides the PIM with the secondary power ground.	17

※1

SIGNAL NAME	PIN NO	SIGNAL NAME	PIN NO
TD15	2	TD7	39
TD14	20	TD6	5
TD13	37	TD5	23
TD12	3	TD4	40
TD11	21	TD3	6
TD10	38	TD2	24
TD9	4	TD1	41
TD8	22	TD0	7

※2

SIGNAL NAME	PIN NO
RD7	13
RD6	31
RD5	48
RD4	14
RD3	32
RD2	49
RD1	15
RD0	33

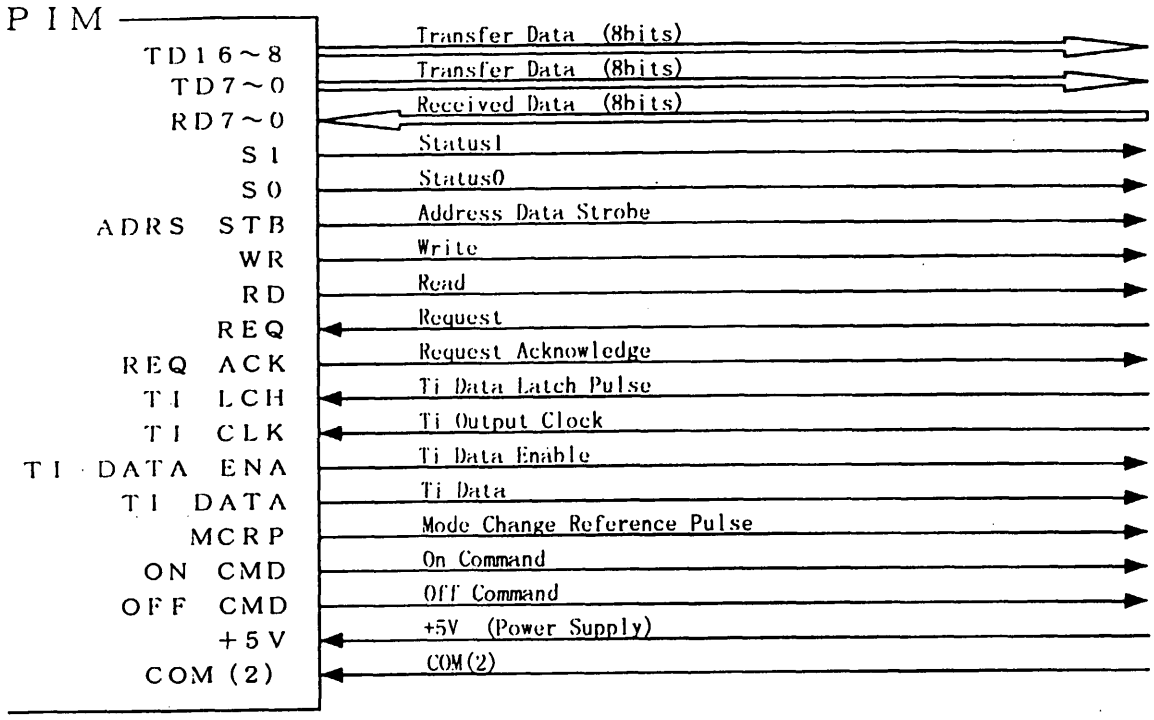

Figure 4.4-2 User Interface Signals

Table 4.4-2 Principal Specification of PIM

ITEM	DIMENSION
1)Data BUS INTERFACE	
BUS MASTER CLOCK FREQ.	4194304Hz(nominal)
SUPERVISORY BUS	32 bits/1 slot
ORGANIZATION	2097152bps
	Diffrential Interface (RS-485)
SUPERVISORY BUS MESSAGE LENGTH	32 bits/1 massage
RESPONSE BUS MESSAGE LENGTH	28 bits/1 massage
2)TI DATA	
DATA LENGTH	24 bits
TIME INDICATION	125 msec~12 day
ACCURACY	DEPENDING ON DHU FUNDAMENTAL CLOCK
TI DATA SAMLPING CLOCK	32768Hz(MAX)
3) USER INTERFACE	
TRANSFER DATA BUS	16BITS (LOWER 8 BITS ARE MULTIPLEXED LOW ADDRESS AND DATA)
RECEIVED DATA BUS	8BITS
CONTROL SIGNALS	5 SIGNALS(S1,S0, ADDRESS DATA STROBE,WRITE, READ)
REQUEST INTERFACE	2 SIGNALS(REQUEST, REQUEST ACKNOWLEDGE)
TI DATA INTERFACE	4 SIGNALS(TI DATA LACH PULSE,TI OUTPUT CLOCK,TI DATA ENABLE,TI DATA)
TIMING SIGNAL INTERFACE	1 SIGNAL(MODE CHANGE REFERENCE PULSE)
PULSE COMMAND CH.	2 CH(ON AND OFF COMMAND)
4)POWER CONSUMPTION(PRELIMINARY)	
	100mA (TYP)
	130mA (MAX)
5)WEIGHT(PRELIMINARY)	180g (nominal)
6)SIZE(PRELIMINARY)	120mm × 96mm × 21mm

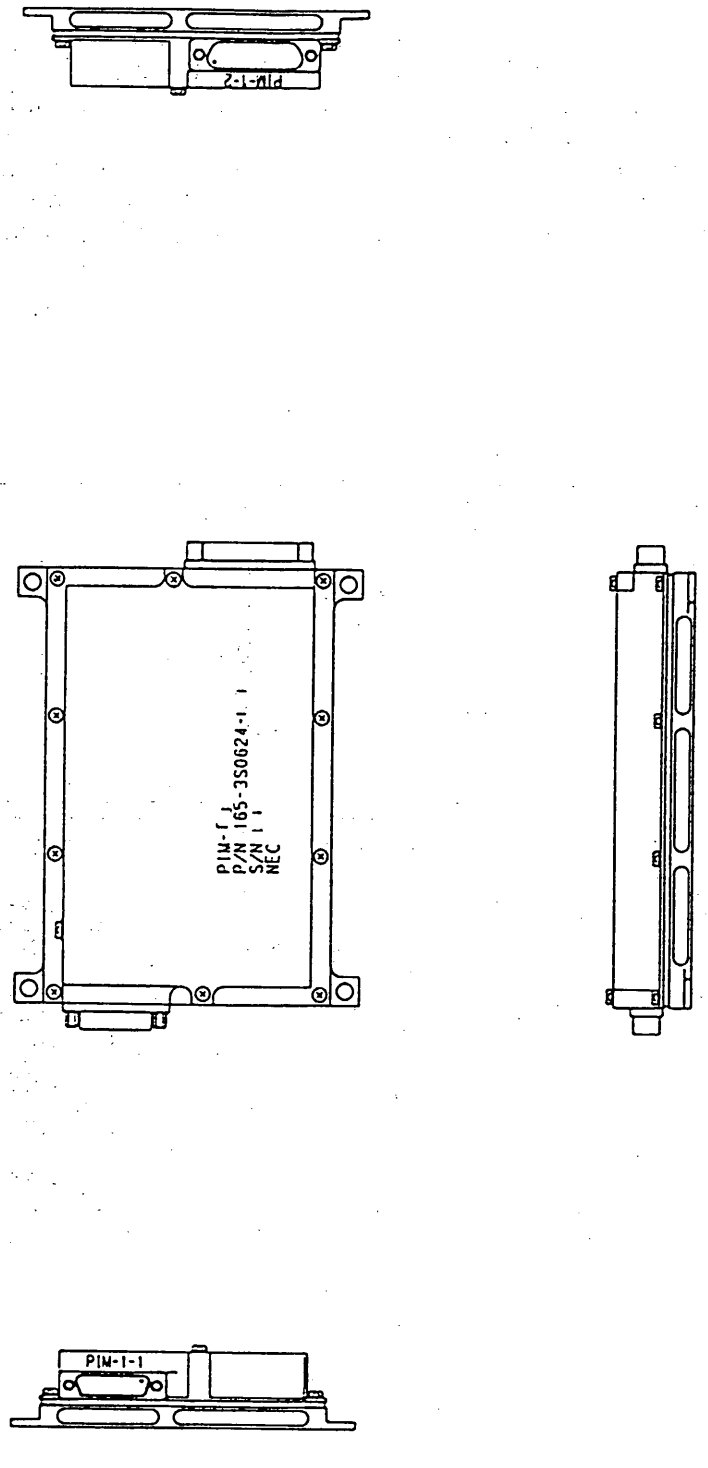

Figure 4.4-3 External View of PIM

4.5 Data Recorder (DR)

4.5.1 Overview

A Solid state data recorder using 16Mbits DRAMs as storage devices is used. DR records observation and instrument status data edited by DHU (Data Handling Unit) and reproduces the stored data during the visible periods from the tracking stations. Record data rate is 65kbps (max.) and reproduce data rate is 32kbps (max.) respectively. It stops automatically at the end of reproduction. When an overwrite mode is selected a command, old data is overwritten by newly stored data. DRAMs are divided into four Memory Blocks and each Memory Block is supplied with power independently such that in case of the failure of one of the Memory Blocks, it can be separated from others.

4.5.2 Functions

(1) Architecture

Schematic Diagram of PLANET-B DR is shown in Fig. 1.

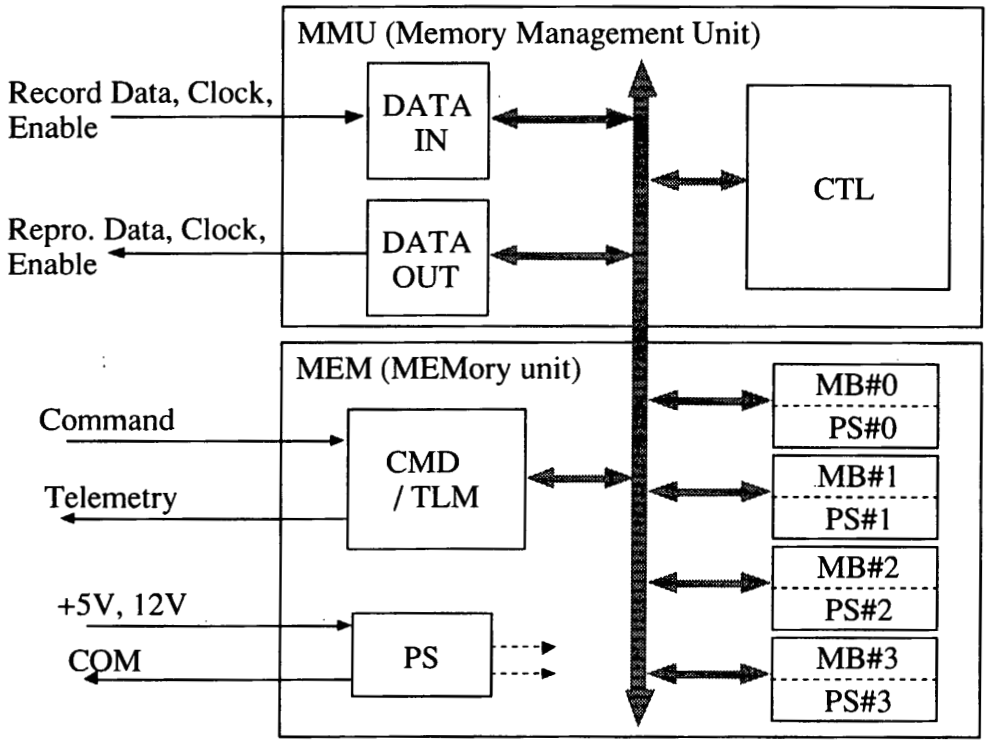

Fig. 1 PLANET-B DR Schematic Diagram

MMU	: DR Controller
DATA IN/OUT	: Data Interface
CTL	: DR Controller, Address Management, Error Correction Encoder / Decoder
MEM	: Memory for User
CMD/TLM	: Command Receiver, Telemetry Buffer
PS	: Power Input Filter, Power Supply
PS#n	: Power Supply for *Memory Block #n
MB#n	: 64Mbits Memory Section (NET)
	* Memory Block #n = PS#n + MB#n

(2) Functions
Status Mode Transition Diagram is shown in Fig. 2.

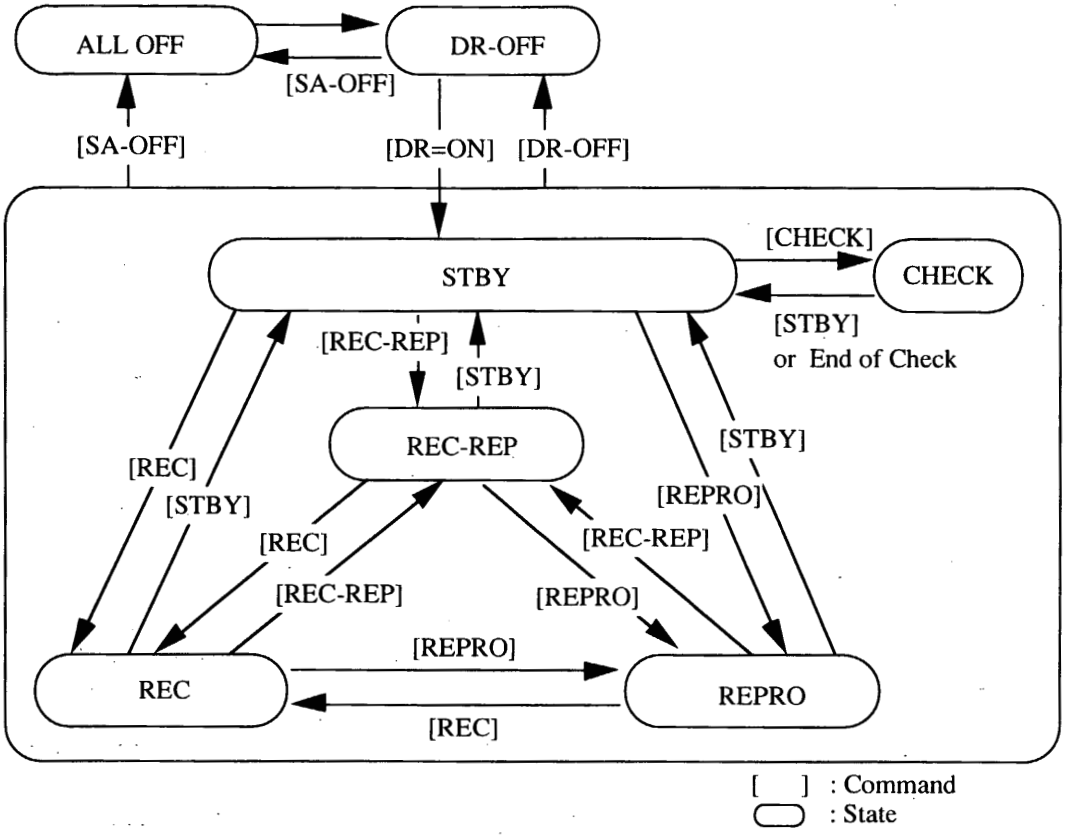

Fig. 2 Status Mode Transition Diagram

DR-OFF : Power off. Data vanishes.
STBY : Stand by. Data is held.
REC : Record data.
REP : Reproduce data.
REC-REP : Record and Reproduce data simultaneously.
CHECK : Self-check memories. Data is broken. Output the results as status telemetry.

(3) Performance

Table. 1 PLANET-B DR SPEC.

		SPEC.	NOTE
Memory Capacity		128 Mbits	For User Use: 128Mbits For Error Correcting: 128Mbits
Record Bit Rate		65 Kbps (max.)	
Repro. Bit Rate		32 Kbps (max.)	
Size		178mm×205mm×53mm	
Weight		1.14 Kg	
Power	Rec./ Repro.	2.8W (max.)	
	Stand by	1.5W (max.)	Data Hold
	Power Off	≒ 0	Data Vanished
Power Voltage		+ 4.9V to + 5.5V + 12.5V to + 13.2V (for Relay)	

External Appearance of PLANET-B DR is shown in Fig. 3.

4.5.3 **Operations**

(1) Command

Table. 2 Discreet Commands

No.	Command	X	Y	
1	DR-ON	0	1	Power on.
2	DR-OFF	0	2	Power off forcibly.
3	DR-RST	3	4	Initialize address pointers.
4	DR-REC	3	0	Record data.
5	DR-REP	3	1	Reproduce data.
6	DR-REC-REP	3	2	Record and Reproduce simultaneously.
7	DR-STBY	3	3	Stop REC, REP, REC-REP or CHECK and into standby mode.
8	DR-CHECK-ENA	4	0	Prepare to accept SELF-CHK command.
9	DR-SELF-CHK *1	4	1	Begin serf checking.
10	DR-ECC-ON	5	0	Correct data errors by (8,4) Expansion Humming Code.
11	DR-ECC-OFF	5	1	Don't Correct data errors.
12	DR-OVWR-ON	4	2	Overwrite on the data not reproduced.
13	DR-OVWR-OFF	4	3	Don't overwrite.
14	DR-MB-ON	6	1	MBs' power on.
15	DR-MB-OFF	6	2	MBs' power off.

*1 : Double Command

(2) Status

Table. 3 Status Telemetry

No.	Status	bit	
1	DR-RST	1	1: RST command Acknowledge.
2	DR-BC	1	1: Block command Acknowledge
3	DR-REC	1	1: Recording data.
4	DR-REP	1	1: Reproducing data.
5	DR-STBY	1	1: Stand by.
6	DR-CHECK	1	1: Self checking memories.
7	WDT-RST	1	1: DR is reset by Watch Dog Timer.
8	DR-ON/OFF	1	1: Power ON 0: Power OFF
9	DR-OVWR	1	1: Overwrite on data 0: Not Overwrite
10	ECC-ON/OFF	1	1: Error correct 0: Not error correct
11	DR-CHECK-ENA/DSA	1	1: SELF-CHK command enable 0: SELF-CHK command disable
12	WR-ADDRESS	8	Recording address
13	RD-ADDRESS	8	Reproducing address
14	1BIT-ERR	8	1bit error count
15	2BIT-ERR	8	2bits error count
16	MB-ON/OFF	4	Memory Block ON/OFF status
17	LATCH-UP	4	Occurring Latch-Up status each Memory Block
18	MB-ERR	4	Results of Self check each Memory Block

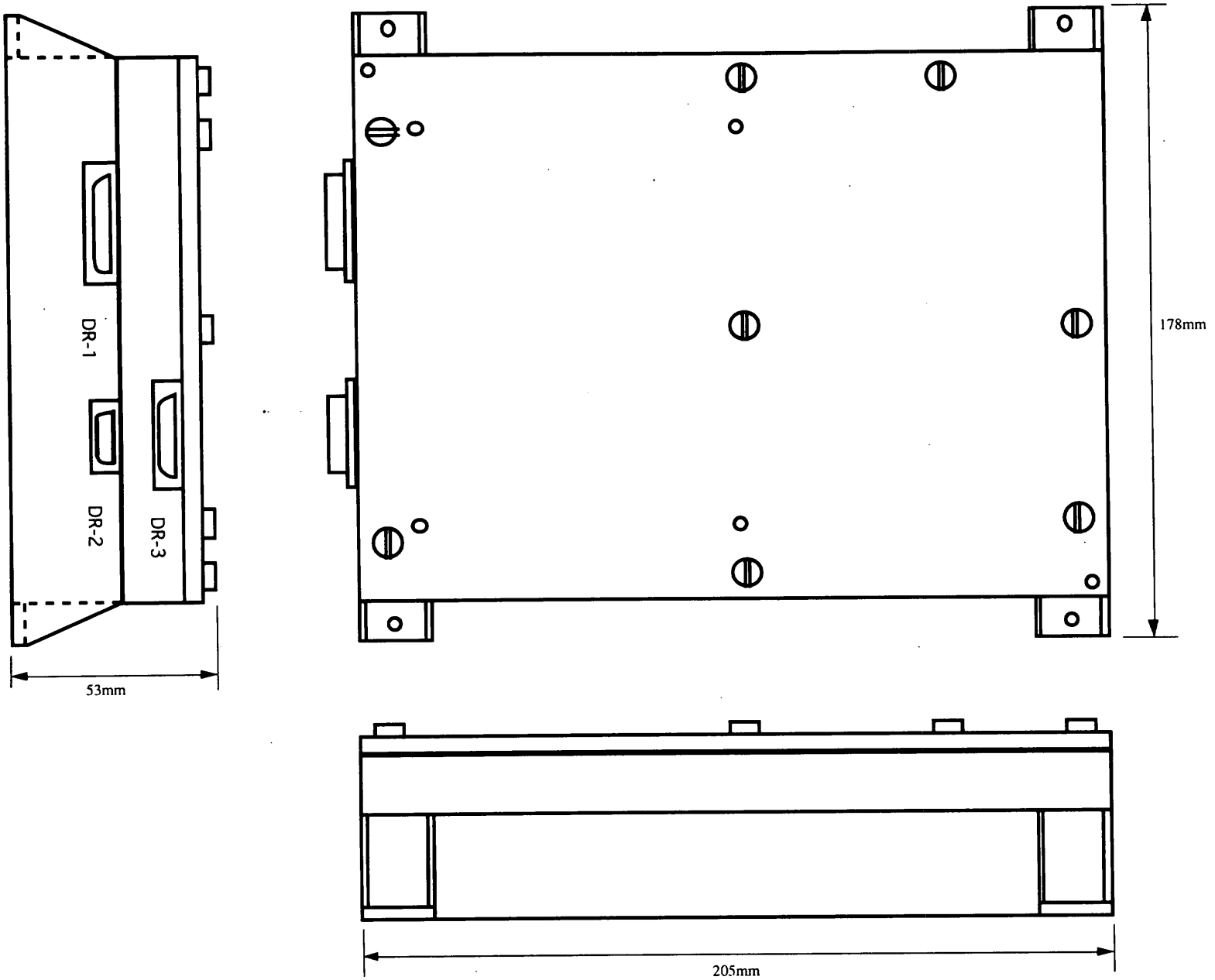

Fig. 3. External Appearance of PLANET-B DR (Unit : mm)

4. 6 Telemetry Command Interface (TCI)

4.6.1 Overview

TCI supplies PIM Interface to the instruments without PIM Interface.
TCI conditions user telemetry and converts analog data to digital data. Its principal features are as follows:

a)Connecting with the Data Bus via PIM.
b)Driving discreet commands Pulse.
c) Receiving Bi-level telemetry data and multiplying to 8bits.
d)Receiving analog telemetry and converting digital data.
e)Sending telemetry data to DHU via PIM.
f) Counting the pulse from SPM.
g) Generating the EPT/INS packet from the EPT-SA and INS-SA.

4.6.2 Functions

The functional block diagram of TCI is outlined in figure 4.6-1. TCI consists of PIM,Command Decoder Module, Telemetry Encoder Module.
The functions and operations of each module are described in the following sections.

4.6.2.1 Command Decoder Module (CMD-DEC)

CMD-DEC decodes the Command Data received via PIM, and then selects the discreet command output channel according to the command. The Discreet command has two types, one is low level pulse command, the other one is high level pulse command.

4.6.2.2 Telemetry Encoder Module (TLM-ENC)

TLM-ENC supports analog and Bi-level telemetry interfaces. In analog telemetry interface,TLM-ENC selects telemetry input channel and receives analog telemetry. The analog telemetry that is received by TLM-ENC,is converted from analog to digital data. These converted data and Bi-level telemetry data are sampled and encoded according to TCI's timing,and sent to DHU via PIM at DHU sample timing.

4.6.2.3 Function to count pulse from SPM.

TCI counts the number of pulses output from SPM. TCI counts the frequency when the threshold to which the number of pulses is set depending on the command is exceeded continuously. These values are output as telemetry data.

4.6.2.4 Function to generate EPT/INS packet.

TCI collects Bi-level telemetry from EPT-SA and analog telemetry from INS-SA. TCI edits and outputs collected Telemetry to the EPT/INS packet.

4.6.2.5 Interface

The user interface has the standard command and telemetry interface. The command interface consists of CMOS level pulse commands and high voltage level pulse command. Telemetry interface consists of the CMOS Bi-level Telemetry and Analog Telemetry. These interface characteristics are described in Table 4.6-1.

4.6.2.6 Specification

The major specifications of TCI are shown in table 4.6-1 and the external view is shown in figure 4.6-3.

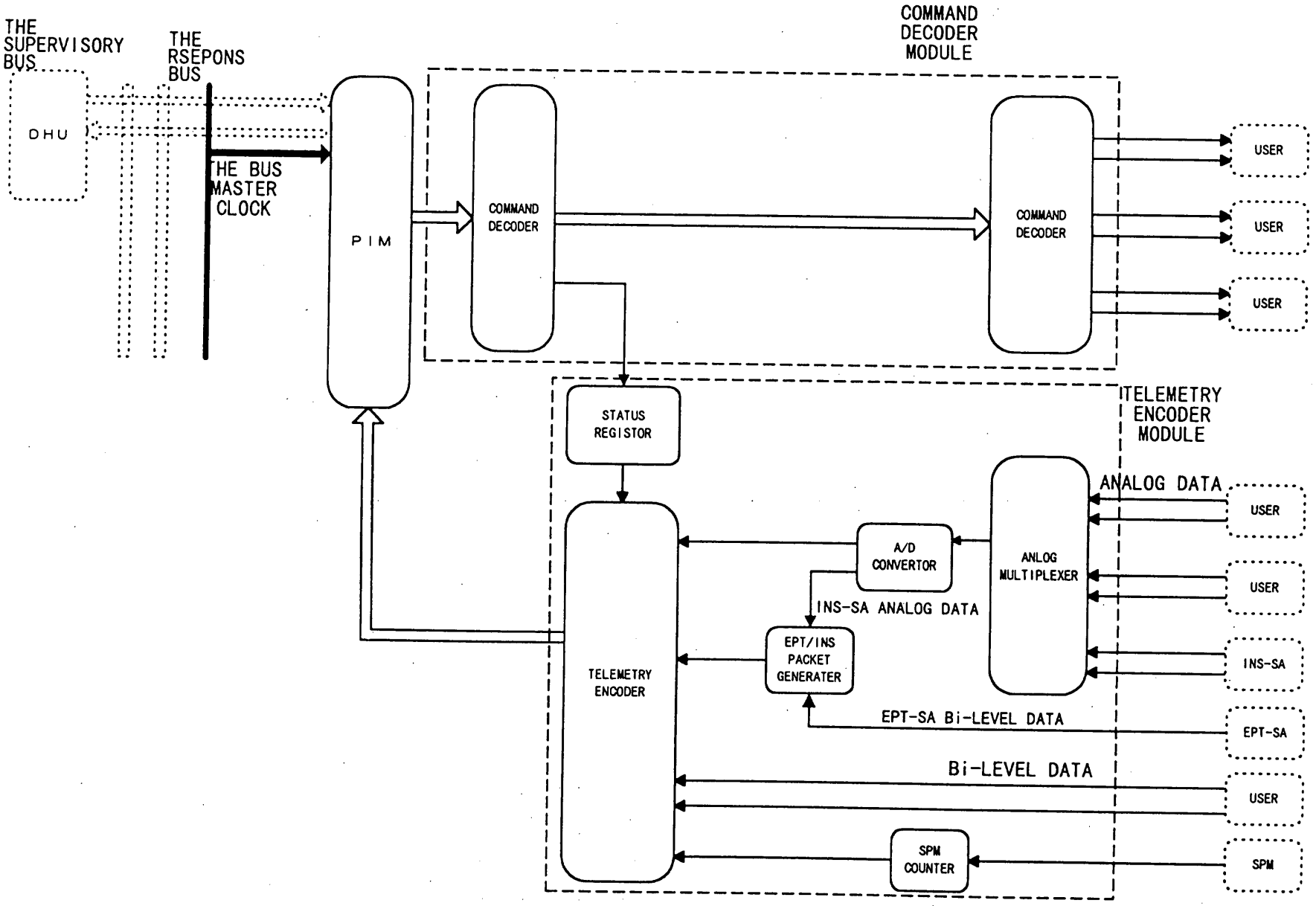

Figure 4.6-1 Block Diagram of Telemetry Command Interface

Table 4.6-1 principal Specification of TCI

I T E M	D I M E N S I O N
1)USER INTERFACE	
COMMAND INTERFACE	DISCREET COMMAND
	HIGH LEVEL PULSE COMMAND
	LOW LEVEL PULSE COMMAND
TELEMETRY INTERFACE	Bi-LEVEL TELEMETRY
	ANALOG TELEMETRY
TELEMETRY AND COMMAND	
CHANNEL NUMBER	DISCREET COMMAND :45 CHANNEL
	Bi-LEVEL TELEMETRY :40 CHANNEL
	ANALOG TELEMETRY :28 CHANNEL
2)A/D CONVERTER CHARACTERISTICS	
INPUT VOLTAGE RANGE	0～5.1V
INPUT IMPEDANCE	ABOVE 200kΩ
QUANTIZATION	8BITS
CONVERSION TIME	25us
CONVERSION ACCURACY	±0.8% FOR FULL SCALE
3)POWER CONSUMPTION	6.0W:with PSU (1.6W: without PSU)
4)WEIGHT	2.0kg(nominal)
7)SIZE	220mm×170mm×74mm

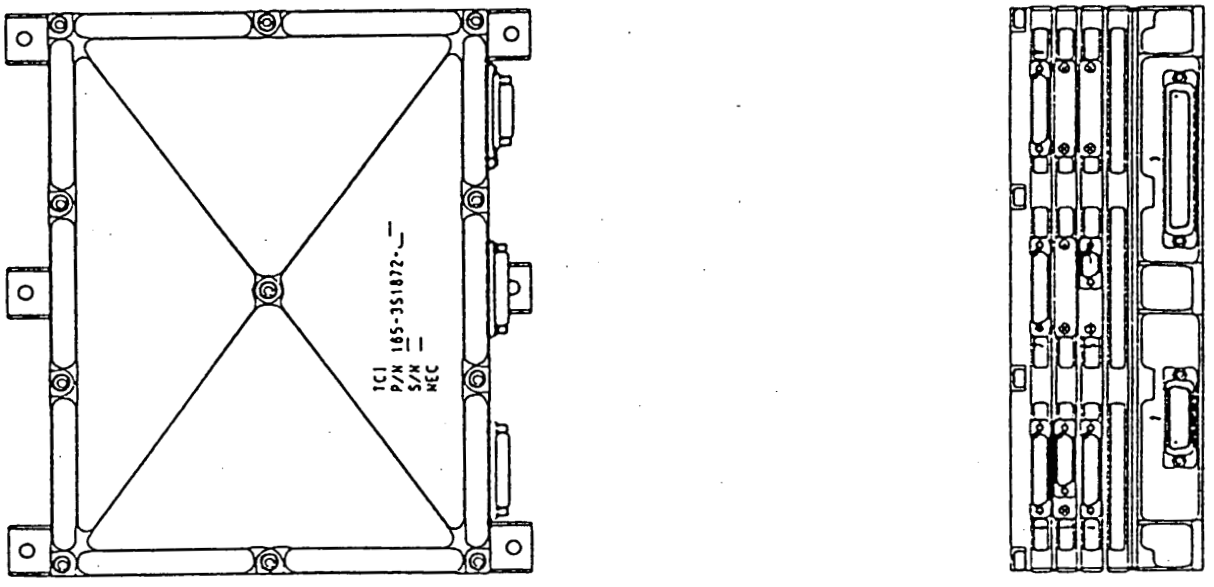

Figure 4.6-3 External View of TCI

5. Attitude and Orbit Control System

K.Ninomiya, I.Nakatani, T.Hashimoto
NEC Corporation

5.1 Overview

The attitude and orbit control system (AOCS) performs all the functions required for attitude and orbit control throughout the mission. The AOCS configuration and components will be described briefly followed by the explanation of AOCS functions.

5.1.1 AOCS configuration and components

The block diagram of AOCS and locations of AOCS components are depicted in Figure 1 and Figure 2 respectively. Followings are the brief description of AOCS component functions. Details of the components are described in Chapter 5.2 and 5.3.

(1) SSAS (Spin-type Sun Aspect Sensor)

The SSAS outputs sun coincidence pulse and sun angle(sun to +Z axis angle) data when the sun crosses its fan shaped field of view. The sensor consists of two sensor heads and one sensor electronics. Each sensor head has fan beam field of view that spans 128 degrees. One of the heads covers the sun angle of 1 to 128 degrees(SSAS-A), and the other head(SSAS-B) covers 10 to 137 degrees.

Note) The AOCE ignores the sun pulse when the sun angle output from the sun sensor is less than 1 degree. This reduces the effective sun angle coverage width of each sensor by one degree from the field of view width of the sensor itself.

(2) SSC (Star SCanner)

The SSC is a passive scan type star sensor with "V"-shaped silicone diodes placed on the focal plane of the optical system. When the star image crosses the diodes, the SSC produces star intensity signal and star coincidence pulse. The center of the field of view is tilted at an angle of 130 degrees from +Z axis of the spacecraft so that the sensor captures bright stars in critical operation phase such as Mars orbit insertion.

(3) ACM (ACceleroMeter)

ACM is an electrical force rebalance type acceleration sensor. Four ACMs are used on PLANET-B. ACM-A and ACM-B are used to measure the acceleration by reaction control jets during velocity increment maneuver. Outputs of the ACM's are integrated by AOCE to shut-off the jets when the commanded velocity increment is achieved. ACM-C is used to measure the acceleration by OMS. ACM-D is used to measure the acceleration by the fourth stage motor of the launch vehicle.

(4) GRS (Gas Rate Sensor)

The Gas Rate Sensor (GRS) is a sort of rate gyro which detects angular velocity around its input axis. PLANET-B uses a couple of GRS for spin rate and nutation detection, respectively. They are used for active nutation control of M-V rocket during fourth stage burning.

(5) ND (Nutation Damper)

To attenuate a nutation motion and spin-ripple of the spacecraft, a passive hoop-type damper is used. Silicone oil is filled in the hoop. The motion of the silicone oil, excited by the nutation and spin ripple, dissipates excess energy of the spacecraft . The offset and radius of the damper are selected to optimize the damping performance.

(6) Propulsion System

Ten 2.3N hydrazine thrusters are used for attitude and orbit control. The thrusters are categorized to three groups : Axial, Radial, and Tangential. Axial thrusters(A1 - A4) are used for spin axis reorientation and orbit control to axial direction. Radial thrusters(R1,R2) are used for radial direction orbit control. Tangential thrusters(T1 - T4) are used for spin rate control. A bipropellant Orbit Maneuver System is equipped for large orbit maneuver such as earth departure and Mars orbit insertion.

(7) AOCE (Attitude and Orbit Control Electronics)

AOCE consists of interface electronics (AOCI) and fault tolerant computer system(AOCP). AOCI is a hard-wired electronics which consists of various circuitry to realize interface functions with attitude sensors and propulsion system. AOCP consists of redundant 16bit microprocessor with 128Kbyte RAM and 16Kbyte ROM. The software implemented on the microprocessor performs various tasks in cooperation with AOCI.

5.1.2 AOCS functions

(1) Earth tracking

After about 70 days from the earth departure, the communication between the earth and the spacecraft can only be achieved with High Gain Antenna (HGA). In this phase,the spin axis should be oriented to the earth as the HGA is fixed on the spacecraft with its narrow beam aligned with +Z axis(intended spin axis). The inertial earth position as seen from the spacecraft moves at the rate of 0.8 deg/day maximum. As the width of the HGA beam is less than 1 degree, the spacecraft spin axis should be reoriented almost once a day to keep the earth within the HGA beam. Following two schemes are implemented in AOCS for the earth tracking.

(a) Sun angle targetting reorientation maneuvers activated by Operation Program(OP)

Attitude maneuver toward the target sun angle is activated by commands stored in OP of DHU. All the control parameters such as target sun angle are calculated on the ground and programmed as OP.

(b) Sun angle keeping maneuver that is automatically activated by AOCE.

In this scheme, AOCE automatically activates the precession maneuver to keep tracking the predicted sun-spacecraft-earth angle. The prediction angle is computed in AOCE utilizing approximate polynomial. AOCE utilizes user-request function of DHU to activate external functions such as thruster warm-up.

The automatic scheme(b) will be normally used for daily operation to alleviate operational burden.

(2) Earth search

If the HGA beam loses the earth due to some failure of above earth tracking, telemetry from the spacecraft can not be received. In such case, the spacecraft will be reoriented to the earth utilizing one(or combination) of the following functions. These functions can be activated by ground command because the spacecraft receives the ground command through Low Gain Antenna that has substantially wider FOV than HGA.

(a)Onboard attitude determination and acquisition

The AOCE tries to determine the attitude utilizing SSAS and SSC data. To help identify stars, expected star pattern data is uploaded to AOCE. If the attitude is determined with good confidence, AOCE generates and executes precession command to reorient the spacecraft to the earth.

(b)Constant sun angle search

The spin axis is first reoriented so that the sun angle falls into predicted sun-spacecraft-earth angle. After commanding this maneuver, ground operator monitors if the telemetry is reacquired. If the telemetry does not reappear, the spacecraft is commanded to reorient to some other position keeping the sun angle constant. This constant-sun-angle maneuver and dwell for telemetry monitor is repeated until the telemetry is reacquired.

(3) Sun acquisition

If the telemetry can not be recovered through above operations, the spacecraft is commanded to reorient to sun pointing attitude. The sun pointing attitude is the safest attitude for spacecraft thermal and electrical house keeping. When the spacecraft is on Mars orbit, the earth does not leave beyond 50 degrees from the sun. This assures that the spacecraft in solar oriented attitude can receive the ground command. After achieving this attitude, countermeasure to bring back the spacecraft to normal operation will be formulated on the ground.

(4) Orbit correction maneuver

Orbit correction is achieved by the combination of axial maneuver and radial maneuver. Axial maneuver is performed by the continuous firing of axial thrusters. Radial maneuver is performed by radial thruster firing in pulse mode. The time from the sun pulse to the thruster pulse determines the velocity increment direction. Locations of radial thrusters are carefully chosen so that the attitude change during orbit control is minimized. Radial orbit control has an unique feature called "2pulses in one spin mode". In this mode, a radial thruster(e.g. R1) is fired half spin period behind the other thruster (e.g. R2) firing. This doubles the time efficiency of the radial orbit control. The acceleration by the thrusters are sensed by ACM-A and ACM-B. The ACM data is integrated by AOCE to shut off the thruster firing when the planned velocity increment is accomplished.

(5) Earth departure/Mars orbit insertion

Large velocity maneuver such as Earth departure and Mars orbit insertion is performed with OMS. The acceleration by the OMS is detected by ACM-C. The acceleration is integrated in AOCE and stops OMS when the preset velocity increment is achieved.

(6) Orbit insertion velocity measurement/correction

The acceleration by the fourth stage burning of the launch vehicle is sensed by ACM-D. The acceleration is integrated by AOCE. If the error between the integrated velocity and desired velocity exceeds a predetermined value, the error is corrected by spacecraft's reaction jets right after the separation of the spacecraft.

(7) Spin axis reorientation

The spacecraft spin axis is reoriented by the pulse firing of appropriate thrusters. To minimize the disturbance to the spacecraft orbit, pair thrusters are used so that the translational acceleration is canceled.

(8) Spin rate control

The spin rate is adjusted by firing the tangential thrusters in pulse or continuous firing mode. AOCP software monitors the spin rate and stops firing when the commanded spin rate is achieved.

(9) Active Nutation Control(ANC)

The spacecraft is prolate(spin-unstable) in orbit injection phase in which the fourth motor is attached to the spacecraft. Large amount of fuel onboard the spacecraft can cause the rapid nutation divergence due to the energy dissipation. To keep the nutation small during the injection phase, the ANC function is utilized. One of the radial thrusters of the spacecraft is activated to reduce the nutation. The thruster on duration is regulated to one spin period to minimize the attitude shift by thurster firings. The nutation rate is detected by GRS. The spin period is detected by GRS or SSAS.

(10) Passive Nutation damping

As the spacecraft is spin-stable after the separation from the fourth stage, the nutating motion and spin rate ripple is damped out by energy dissipation of fluid enclosed in ND. The damping time constant is approximately 10 minutes on Mars orbit.

(11) IP/PC generation

To distribute the sun reference pulse to science instruments, AOCE generates Index Pulse(IP) and Phase Clock(PC). The IP is generated with reference to SSAS. During the eclipse, IP is generated with reference to SSC star pulse. PC is generated by dividing IP period utilizing digitally implemented frequency multiplier.

(12) Attitude sensor data processing

Data from SSAS, SSC, GRS, ACM is processed in AOCE and telemetered down to the ground. The telemetered data is used to determine the spacecraft attitude on the ground.

5.2 Attitude and Orbit Control Electronics (AOCE)

K.Ninomiya T.Hashimoto
NEC Corporation

5.2.1 Scope

The AOCE is divided into two parts --- interface electronics(AOCI) and fault tolerant computer system (AOCP). AOCI is a hard-wired electronics which consists of various circuitry to perform interface functions with attitude sensors and propulsion system. AOCP consists of redundant 16bit microprocessor with 128Kbyte RAM and 16Kbyte ROM. The onboard software (OBS) implemented on the microprocessor realizes AOCS functions described in 5.1.2.

The AOCP consists of two CPU modules, two common memories, two common buses, and MRM(Monitor and Reconfiguration Module). The core of the CPU module is a 16 bit word microprocessor implemented on a radiation-hardened latch-up free 9K C-MOS gate array. Peripheral functions such as interrupt controller, serial interface for debugging, programmable timer, watch dog timer, memory controller are implemented on another gate array named IOP(Input/Output Processor). 16Kbyte ROM and 128Kbyte RAM are accommodated in each CPU module for program and data storage. RAM is accessed through SEC-DED error correcting processor(ECCP) to avoid the effect of single event upset due to cosmic ray. Data from/to the modules are transferred through redundant common bus. One of the buses is activated at a time. MRM is responsible for the reconfiguration control of CPU modules. According to the error symptom from the CPU, MRM switches off the faulty CPU and activates stand-by CPU. The AOCP operates in simplex mode or duplex mode. Simplex mode is usually used because, in cruise phase, it is not necessary to maintain normal processing due to the inherent attitude stability of the spin-stabilized spacecraft. During the critical operation, such as initial attitude acquisition and Mars orbit insertion , duplex mode is selected to maximize the possibility to accomplish the required task.

The AOCI is composed of an analog-to-digital converter, counters, and thruster valve drivers and fault detection traps. The fault detection trap monitors the control output of AOCP OBS. The trap includes:

(1)RCS watch dog timer

If the OBS commands the thruster to fire a pulse of longer than 3 seconds, the firing is interrupted. This trap is active only in pulse firing mode, in which all the control can be realized with thruster pulses of shorter than 3 seconds.

(2)Thruster selection number and parity

The thruster driver circuitry checks the thruster select command submitted by OBS.

(a) The number of on-bits in the command word shall be less than three. (The control logic never commands more than two thrusters at a time.)

(b) The parity bit appended by OBS shall be consistent.

(3)OMS minimum burn timer

A hard-wired counter is equipped so that OMS firing can be sustained longer than preset period which is enough and minimum to accomplish the planned orbit maneuver. This feature will be utilized for Earth departure and Mars orbit insertion.

5.2.2 Main characteristics

External view

Figure 1

Weight

6.5 Kg

Power Consumption

Simplex Mode : 14.5 W

Duplex Mode : 18.0 W

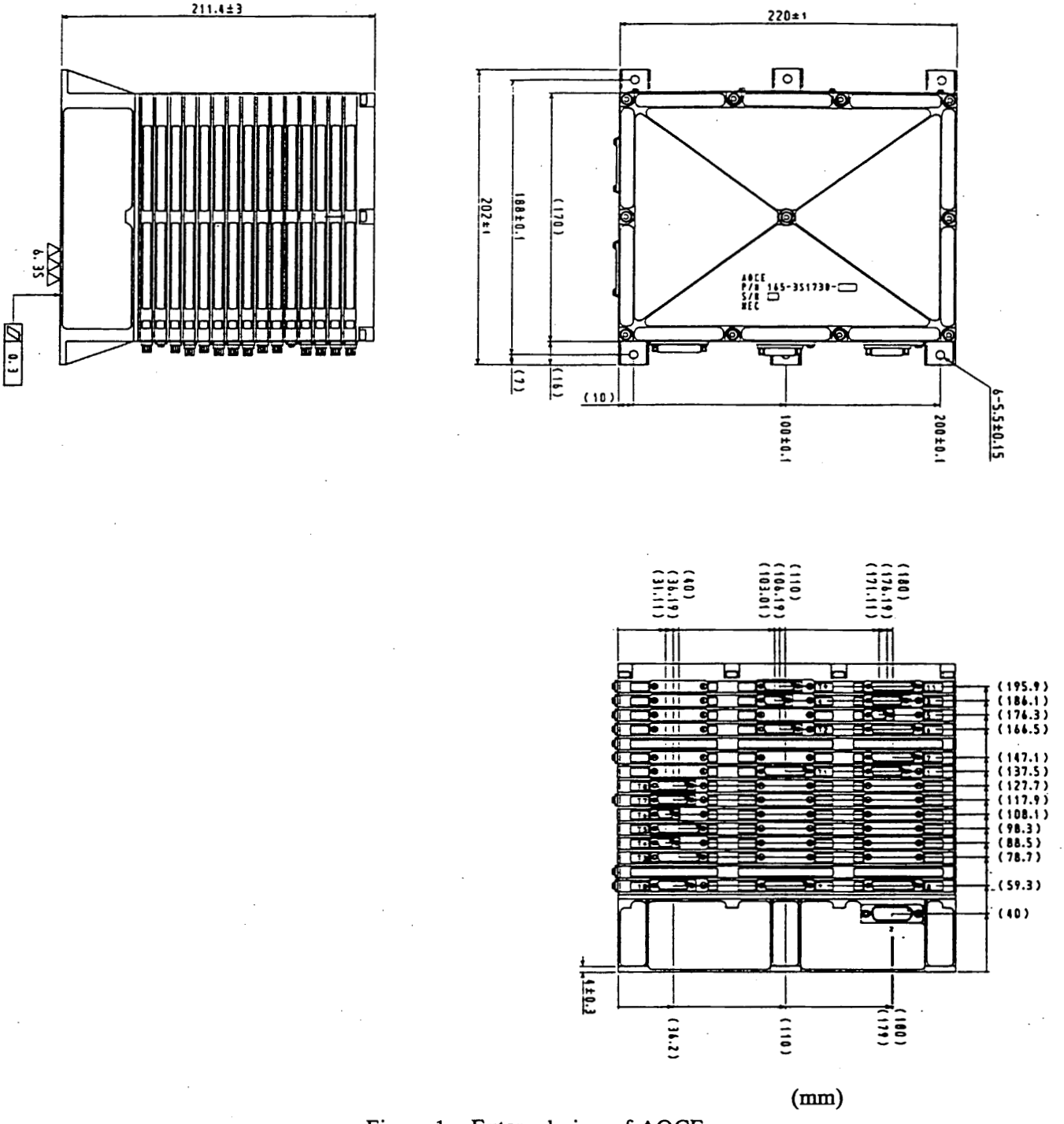

(mm)

Figure 1 External view of AOCE

5.3 Components for AOCS

5.3.1 SSAS (Spin-type Sun Aspect Sensor)

K.Ninomiya, E.Hirokawa, T.Hashimoto
NEC Corporation

5.3.1.1 Scope

The SSAS outputs sun coincidence pulse and sun angle(sun to +Z angle) data when the sun crosses its fan shaped field of view. The sensor consists of two sensor heads (SSAS-A and SSAS-B) and one sensor electronics. Each sensor head has fan beam field of view that spans 128 degrees. One of the heads covers the sun angle of 1 to 128 degrees(SSAS-A), and the other head(SSAS-B) covers 10 to 137 degrees.

Note) The AOCE ignores the sun pulse when the sun angle output from the sun sensor is less than 1 degree. This reduces the effective sun angle coverage width of each sensor by one degree from the field of view width of the sensor itself.

5.3.1.2 Main characteristics

FOV (measured from +Z axis of the spacecraft)
- SSAS-A : 1 to 128 degrees
- SSAS-B : 10 to 137 degrees

Spin rate range
- 1.5 to 70 rpm

Operating solar intensity level
- Earth orbit to Mars orbit

Accuracy
- ± 0.1deg ($|\beta| \leqq 40$deg)
- ± 0.25deg ($|\beta| > 40$deg)
- β :Sun angle measured from the center of FOV

Resolution
- 0.008deg

Output data format(for each sensor head)
- Coarse sun angle : 7 bit parallel
- Fine sun angle : 2 ch analog

Supply voltage
- 29V $\pm$ 1.5V DC

Power consumption
- less than 1.4W

Operating temperature range
- -30° C to +60° C

External view
- Sensor head : Figure 1
- Sensor electronics : Figure 2

Weight
- 1.19 Kg (Total)

5.3.1.3 Command Items

Commands for SSAS are listed in Table 5.3.1.1 1. All of commands are sent via AOCE.

Table 5.3.1.3-1 Command items of SSAS

CODE		COMMAND NAME	FUNCTION
X	Y		
4	3	SSAS-A ON	SSAS-A ON
4	4	SSAS-A OF EN	SSAS-A OFF ENABLE
4	5	SSAS-A OFF	SSAS-A OFF
4	0	SSAS-B ON	SSAS-B ON
4	1	SSAS-B OF EN	SSAS-B OFF ENABLE
4	2	SSAS-B OFF	SSAS-B OFF

5.3.1.4 Telemetry Items

Status of SSAS can be seen in HK packet telemetry. Table 5.3.1.4-1 shows the list of bilevel data concerning SSAS.

Sun angle and sun pulse timing measured by AOCE can be seen in HK and AOCS packet. The detail is shown in appendix A and B.

Table 5.3.1.4-1 Bilevel data of SSAS

Address (HEX)	S/S NAME	Bit	ITEMS	STATUS	
				1	0
8007	AOCE8	B1	SSAS-A ON/OFF	ON	OFF
8007	AOCE8	B0	SSAS-B ON/OFF	ON	OFF
8001	AOCE1	B4	SSAS-A OF EN	ENA	DIS
8001	AOCE1	B3	SSAS-B OF EN	ENA	DIS

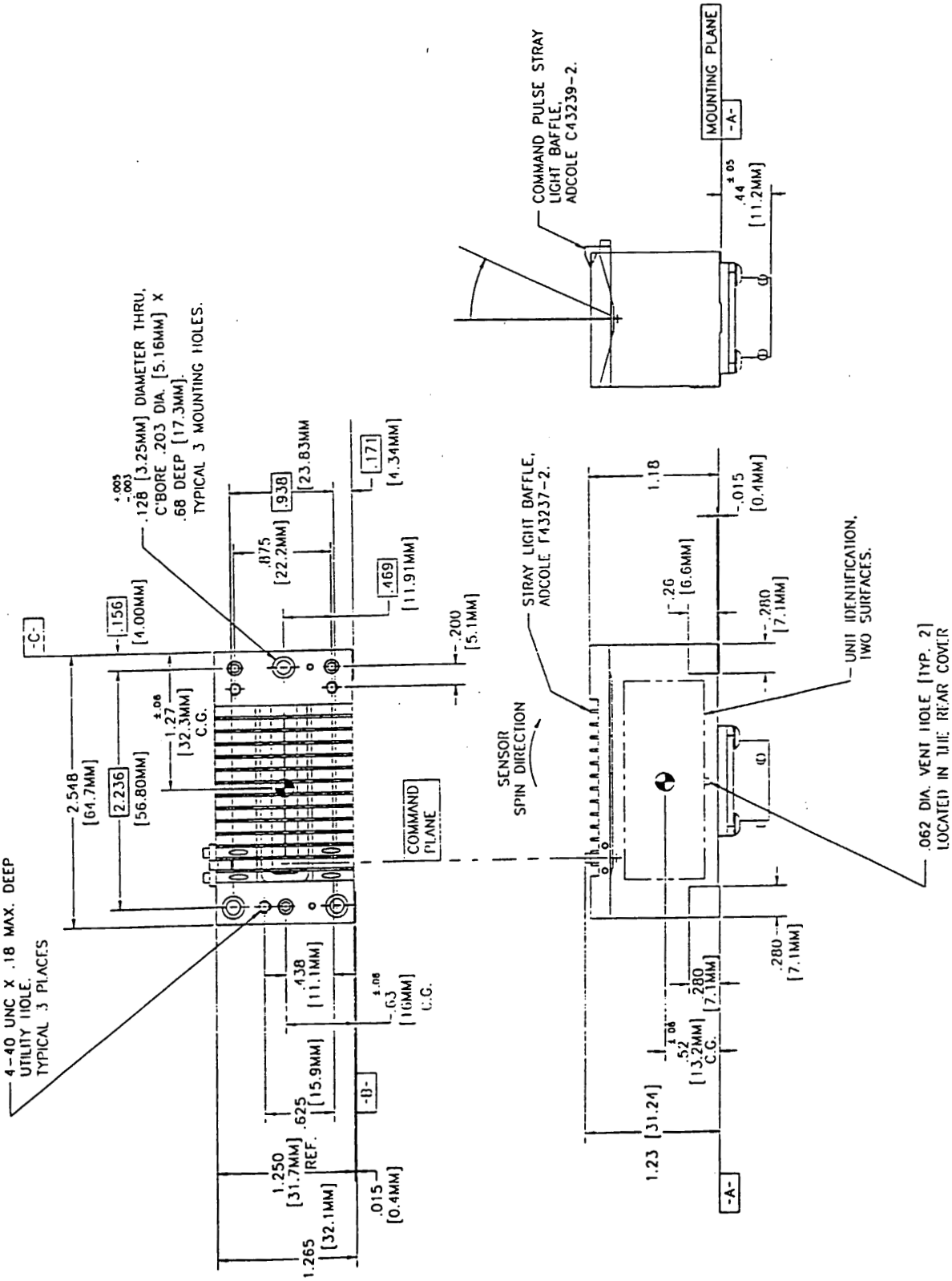

Figure 1 External view of SSAS (sensor head)

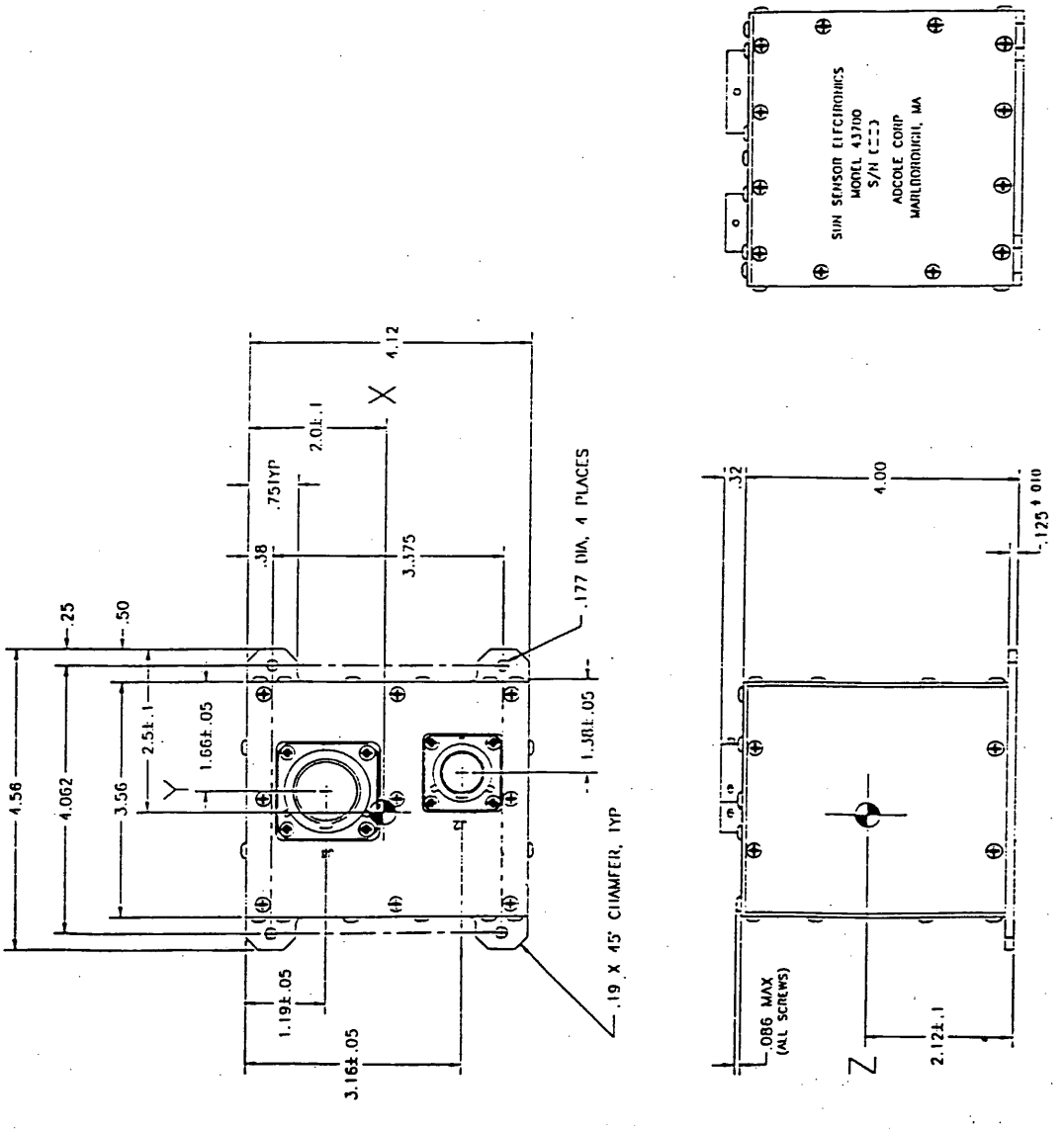

Figure 2 External view of SSAS (sensor electronics)

5.3.2 Star Scanner(SSC)

K.Ninomiya,T.Hashimoto and E.Hirokawa(ISAS)
Toshiba Corporation

5.3.2.1 General description

The Star Scanner (SSC) is a type of star sensor which determines the star positions in the coordinate system fixed in the body of satellite. SSC has a field of view (FOV) of 14° ×14° and a sensitivity of 2.0 visual magnitude. To offer a high performance, the SSC employs a photodiode detector consisting of multiple slit-shaped sensitive areas.

5.3.2.2 Functions

SSC block diagram is shown in Figure 1.

(1) Baffle

The two-stage light baffle is mounted on the front of the SSC optics. It attenuates stray lights from outside of the FOV of SSC such as the sunlight, albedo of the Earth, and sunlight reflections by satellite. It is made of CFRP to reduce weight.

(2)Optical system

The lens system is provided to collect light and to focus the star image on the sensitive areas of the photodiode. Within the FOV of SSC and operating temperature range, high light condensing performance is obtained over a wide wavelength range. It consists of 5 lenses, and the front one is a radiation-hardened lens.

(3)Focal plane

The detector is on the focal plane of the lens system. Four slit-shaped sensitive areas (named "cells") are formed on a photodiode detector. They are divided into two sets to provide redundancy. An LED is installed in the vicinity of the detector in order to calibrate it.

(4)Electronics

This section consists of a preamplifier, a signal processor, an interface and calibration circuit. The preamplifier has a high sensitivity and high gain, and amplifies low level signal outputs from the photodiode to the level appropriate for signal processing.

The signal processor consists of the filter, discriminator, peak holding, and other circuits. It provides the star detection timing and the signal amplitude which is proportional to star brightness for AOCE. Two signal processing systems are provided. Normally, two cell outputs are processed independently, but they can be added together for other processing modes. The interface section is composed of command receivers from AOCE, telemetry and power circuit.

5.3.2.3 Specification and Performance

SSC performance is indicated in Table 1. Commands and telemetry data are listed in Tables 2 through 4. SSC external views are shown in Figure 2.

Table 1. SSC performance characteristics

Item	Description
Detector	Silicon photodiode V-shaped type × 2(redundancy)
Optical system	Refractive system f=60mm,F1.0
Wavelength range	0.5～1.1 μ m
Lens transmittance	>0.85
FOV	14° ×14°
Sensitivity	>2.0 Visual magnitude(at 7.5rpm)
Angular accuracy	Elevation:10 arc min Azimuth :10arc min
Operating temperature range	−30℃～+20℃
Power consumption	0.39 W (+20℃)

Table 2. Discrete commands(Processed by AOCE)

Code		Command name	Description	Related telemetry
X	Y			
4	6	SSC ON	SSC PS ON	8000 54 B2
4	8	SSC OFF	SSC PS OFF	8000 54 B2
4	9	SSC CAL ON	SSC CAL ON	8000 54 B3
4	A	SSC CAL OFF	SSC CAL OFF	8000 54 B3
4	7	SSC OFF ENA	SSC OFF ENABLE	8000 55 B5

*When the pseudo-star light due to a ON/OFF switching of a built in LED irradiates photodiode section, the pseudo-pulses are generated at about 160ms intervals corresponding to a spin rate of 7.5 rpm. The system returns to the normal measurement mode upon a SSC CAL OFF command execution.

Table 3. Block commands(from AOCE)

Bit	Function	Description				
0	Redundant photodiode system selection	0	Photodiode (PD) A select			
		1	Photodiode (PD) B select			
1	Circuit selection (Notes)	B1	B2	Circuit A output	Circuit B output	
		0	0	PD＊1	PD＊2	
2		0	1	PD＊1+PD＊2	N/A	
		1	0	N/A	PD＊1+PD＊2	
		1	1	PD＊1	PD＊2	
3	Gain selection	0	High			
		1	Low			
4	Discrimination level selection	B4	B5	Discrimination level		
		0	0	220mV (Gain High 2.2simag)		
5		0	1	290mV (Gain High 2.0simag)		
		1	0	119mV (Gain Low 2.2simag)		
		1	1	154mV (Gain Low 2.0simag)		
6	Time constant selection	No	B6	B7	Applicable spin rate(rpm)	
		0	0	0	7.0	
7		1	0	1	7.5	nominal
		2	1	0	8.0	
		3	1	1	9.5	

Normally SSC is used BC= 01 (H)

・Photodiode : 「0」 Photodiode A

・Circuit : 「00」 Circuit A output = PD A1 , Circuit B output = PD A2

・Gain :「0」 High

・Discrimination level :「00」 2.2 si mag

・Filter time constant :「01」 7.5 rpm

NOTES : 「＊」 is A or B selected by Bit 0

Table 4. Status

Bit	Function	Description				
1	SSC ON/OFF	0	OFF			
		1	ON			
2	SSC CAL/MES	0	Measure			
		1	Calibrate			
3	SSC A/B	0	A			
		1	B			
4	Signal processing circuit system selection (Notes)	B3	B4	Circuit A outpt	Circuit B output	
		0	0	PD＊1	PD＊2	
5		0	1	PD＊1+PD＊2	N/A	
		1	0	N/A	PD＊1+PD＊2	
		1	1	PD＊1	PD＊2	
6	Gain	0	High			
		1	Low			
7	Discrimination level selection	No	B7	B8	Discrimination level	
		0	0	0	220mV (Gain High 2.2simag)	
8		1	0	1	290mV (Gain High 2.0simag)	
		2	1	0	119mV (Gain Low 2.2simag)	
		3	1	1	154mV (Gain Low 2.0simag)	
9	Time constant	No	B6	B7	Applicable spin rate(rpm)	
		0	0	0	7.0	
10		1	0	1	7.5	nominal
		2	1	0	8.0	
		3	1	1	9.5	

NOTES : 「＊」 is A or B selected by Bit 3

Table 5. Data

Name	A/D	Description
STH1	A	Star magnitude signal(circuit A output) , 0～5V
STP1	D	Star detection timing signal(circuit A output)
STH2	A	Star magnitude signal(circuit B output) , 0～5V
STP2	D	Star detection timing signal(circuit B output)
Status signal	D	See Table 4.

A: Analog / D: Digital

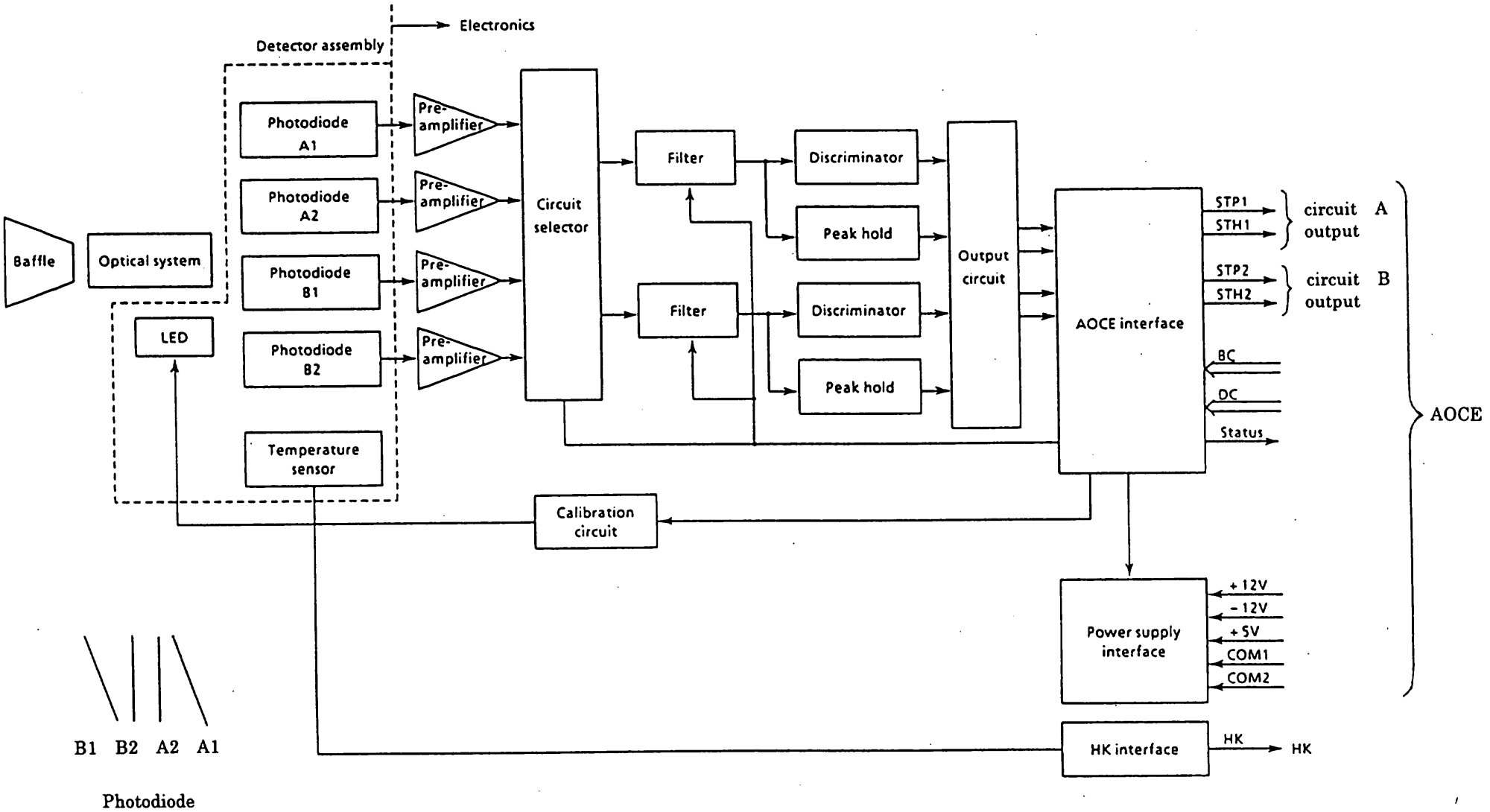

Fig.1 SSC block diagram

(mm)

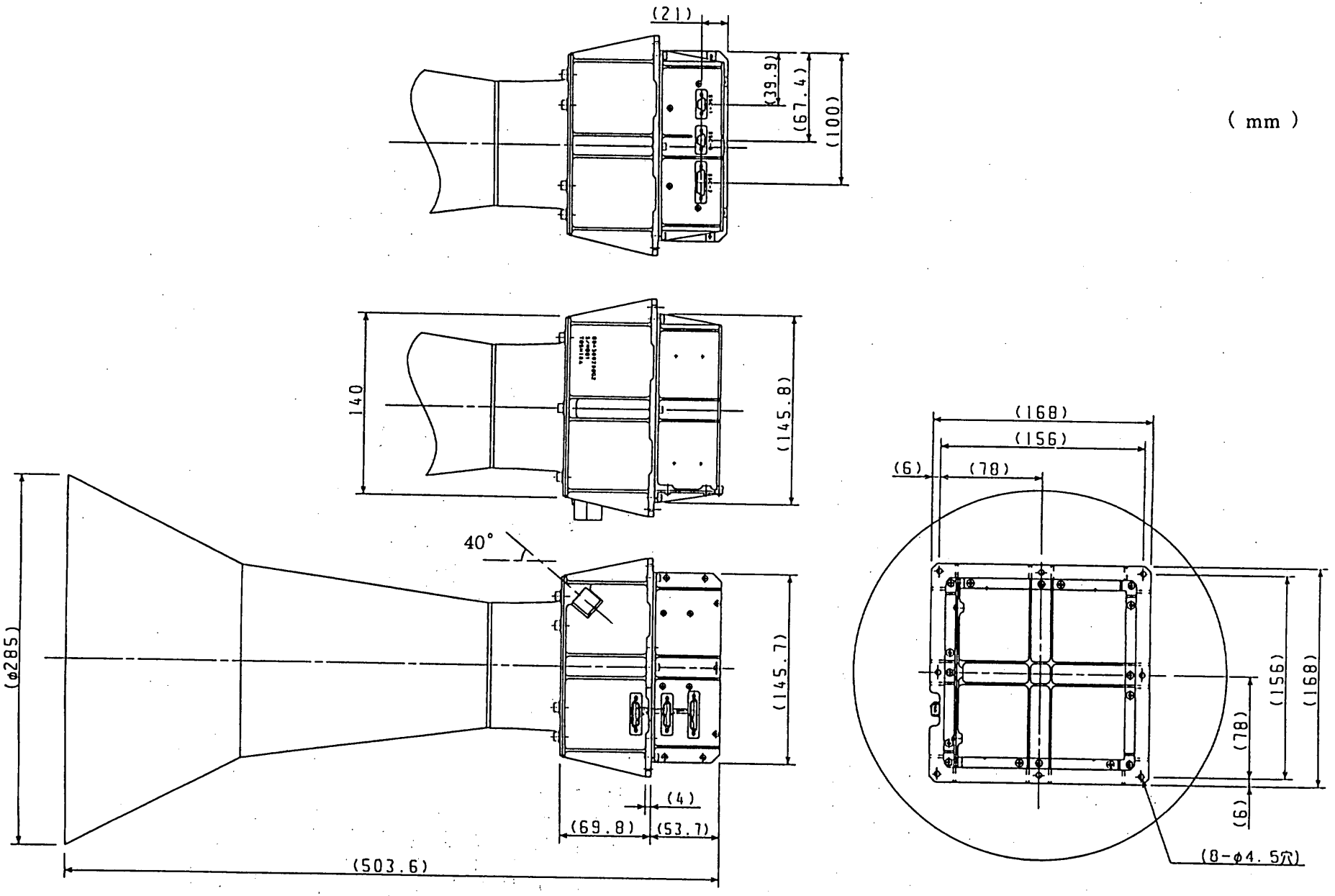

Fig.2 Star scanner external views

Weight : 2.05 kg

5.3.3 Gas Rate Sensor (GRS)

K.Ninomiya, J.Kawaguchi and T.Hashimoto
Tamagawa Seiki Co. Ltd.

5.3.3.1 General

The Gas Rate Sensor (GRS) is a sort of rate gyro which detects angular velocity around its "input axis". PLANET-B uses a couple of GRS for spin rate and nutation detection, respectively. They are used for active nutation control of M-V rocket before, during and after fourth stage burning.

5.3.3.2 Specification and Performance

GRS-A detects angular velocity around X-axis of PLANET-B and GRS-B detects that around Z-axis of it. Specification of them are listed in Table 5.4.3.2-1.

Table 5.3.3.2-1 Specification of GRS

	GRS-A	GRS-B
Model Number	TA7298N1	TA7298N2
Detection range	± 100[deg/sec]	± 1000[deg/sec]
Output voltage	± 5[V] ± 10%	± 5[V] ± 10%
Sensitivity	50[mV/(deg/sec)] ± 10%	5[mV/(deg/sec)] ± 10%
Offset voltage	± 500[mV] MAX	± 500[mV] MAX
Noise voltage	10[mV]rms MAX	10[mV]rms MAX
Linearity	± 1[%] MAX	± 2[%] MAX
Hysteresis	± 0.5 [deg/sec] MAX	± 0.5 [deg/sec] MAX
Threshold	± 0.5 [deg/sec] MAX	± 0.5 [deg/sec] MAX
Frequency response	20 [Hz]	50 [Hz]
Start-up time	100 [msec] MAX	100 [msec] MAX
Load impedance	5 [k Ω] MIN	5 [k Ω] MIN
Life time	10000 [hour] MIN	10000 [hour] MIN

5.3.3.3 Size, Weight, and Power Consumption

External views of GRS-A and GRS-B are shown in Fig.5.3.3.3-1 and Fig.5.3.3.3-2, respectively. Size, weight and power consumption of them are listed in Table 5.3.3.3-1.

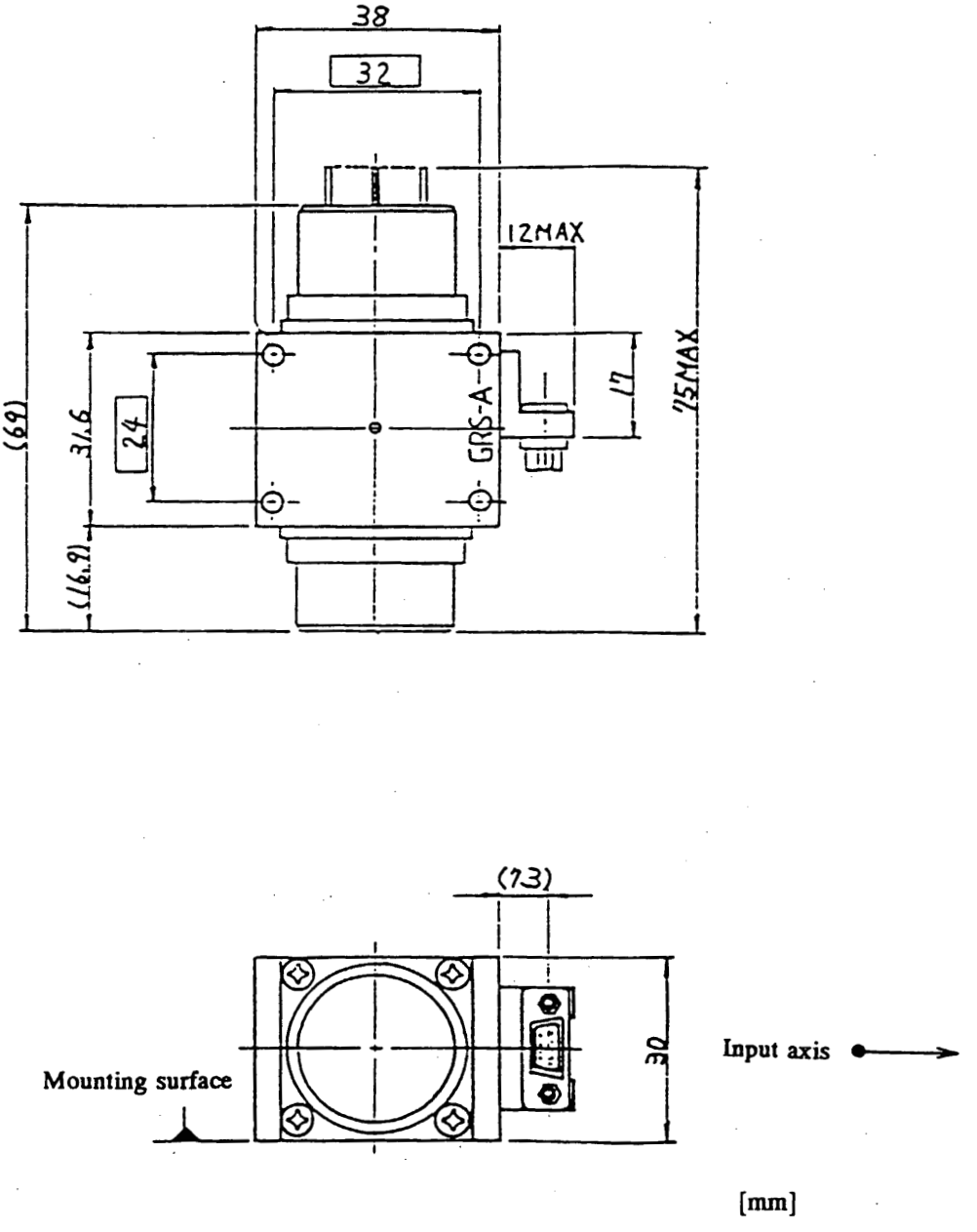

Fig.5.3.3.3-1 External view of GRS-A

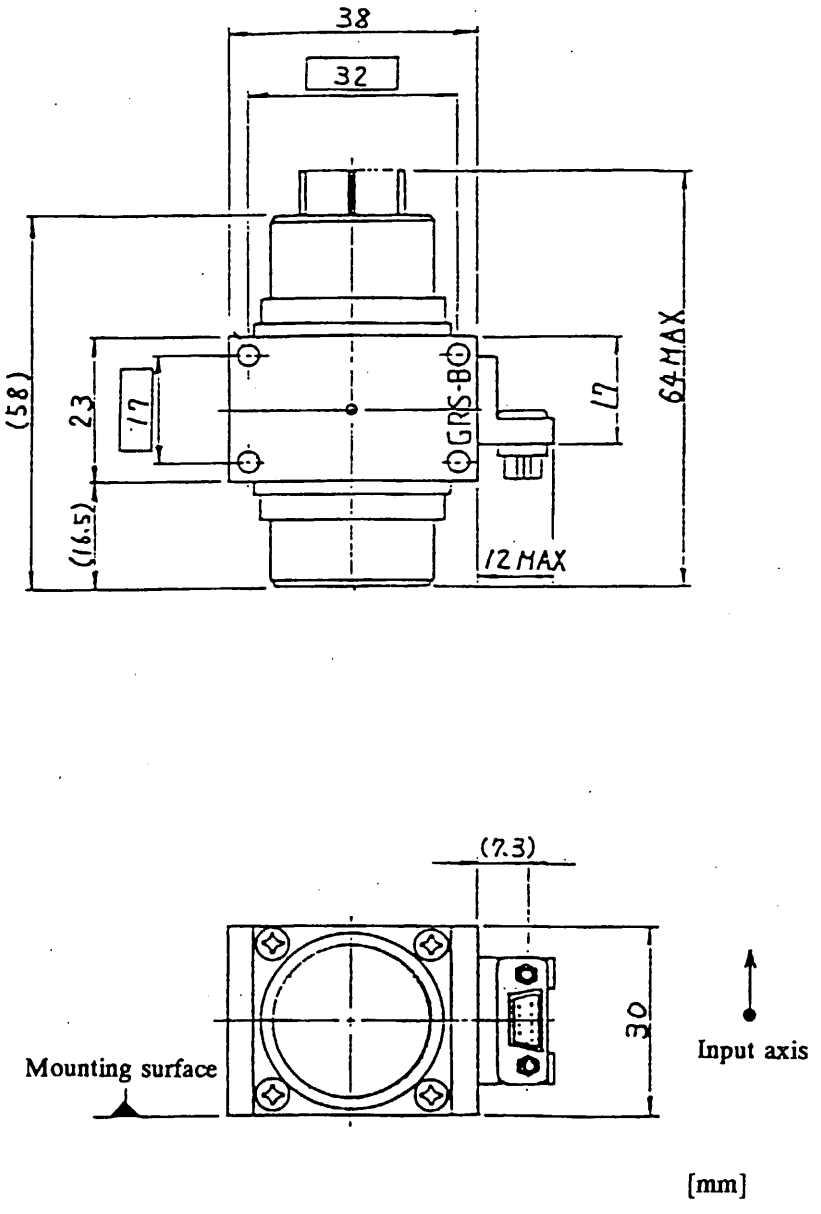

Fig.5.3.3.3-2 External view of GRS-B

Table 5.3.3.3-1 Size, weight and power consumption

	GRS-A	GRS-B
Size	75 × 30 × 50 [mm]	64 × 30 × 50 [mm]
Weight	105 [g]	85 [g]
Power	0.5 [W]	0.5 [W]

5.3.3.4 Electrical and Mechanical Interface

Electrical interface of GRS is shown in Fig. 5.3.3.4-1. All lines including power supply are connected with AOCE.

Sensor coordinates of GRS-A and GRS-B are drawn in Fig.5.3.3.3-1 and Fig.5.3.3.3-2, respectively. Relation between sensor coordinates of both sensors and that of spacecraft is shown in Table 5.3.3.4-1

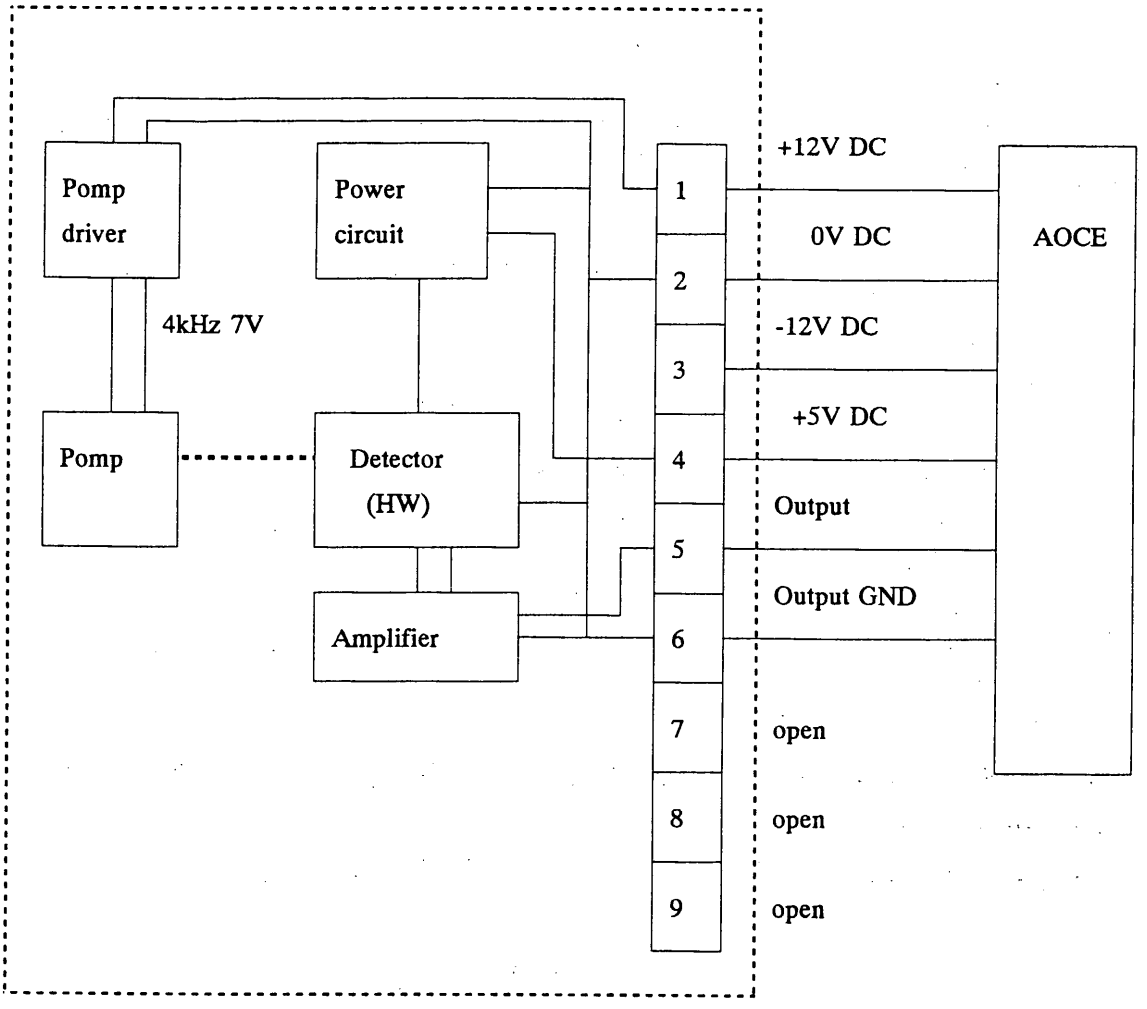

Power supply $\pm$ 12[V] $\pm$ 0.5[V] 20[mA] MAX

$+$ 5[V] $^{+1.0}_{-0.5}$ [V] 60[mA] MAX

Fig. 5.3.3.4-1 Electrical interface of GRS

Table 5.3.3.4-1 Sensor alignment

GRS coordinate	PLANET-B coordinate	
	GRS-A	GRS-B
X (Input) Axis	-X	Z
Y (Gas flow) Axis	Z	X
Z (Colioris) Axis	Y	Y

5.3.3.5 Command Items

Commands for both GRS are listed in Table 5.3.3.5-1. All of commands are sent via AOCE.

Table 5.3.3.5-1 Command items of GRS

CODE		COMMAND NAME	FUNCTION
X	Y		
3	C	GRS-A_ON	GRS-A on
3	D	GRS-B_ON	GRS-B on
3	E	GRS_OFF_ENA	GRS off enable
3	F	GRS_OFF	both GRS off

5.3.3.6 Telemetry Items

Status of both GRS can be seen in HK packet telemetry. Table 5.3.3.6-1 shows the list of bilevel data concerning GRS.

Output voltages of both GRS can be seen in AOCS packet while LAUNCH mode.

Table 5.3.3.6-1 Bilevel data of GRS

Address (Hex)	S/S NAME	Bit	ITEMS	STATUS	
				1	0
8001	AOCE2	B6	GRS OFF ENA/DIS	ENA	DIS
8007	AOCE8	B2	GRS-A ON/OFF	ON	OFF
		B3	GRS-B ON/OFF	ON	OFF

5. 3. 4 Accelerometer (ACM)

K.Ninomiya,T.Hashimoto and E.Hirokawa(ISAS)
Japan Aviation Electronics Industry,Ltd.

5. 3. 4. 1 General

The ACM is a single axis acceleration sensor whose type is an electrical force rebalance one.

Four ACM's are divided into two groups. One group (ACM−A、ACM−B and ACM−D) is used to measure the velocity increment generated by thruster firing of reaction control system or orbit maneuvering system during the trajectry control maneuver.

The outputs of ACM's are integrated in AOCP to shut off the thrusters when the commanded velocity increment is achieved.

The other (ACM−C) is used to measure the acceleration due to the fourth tage motor of the launch vehicle.

The output of ACM−C is also integrated in AOCP to obtain it as ΔV.

Each ACM has a temperature sensor to provide an analog current signal which is proportional to its ambient temperature.

Power−ON and −OFF of ACM's is controlled by AOCE through commands from the ground.

A functional block diagram of ACM is depicted in Figure 1.

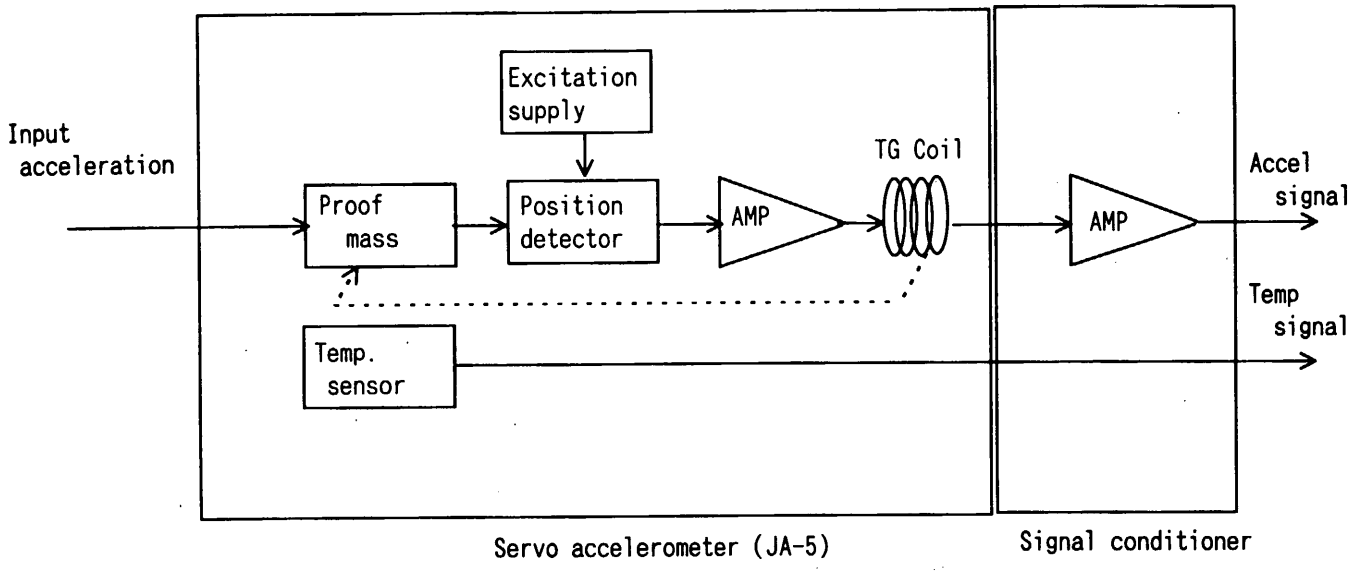

Figure 1. Functional block diagram of ACM

5. 3. 4. 2 Specification and performance

Performance and characteristics of ACM's are shown in Table 1(1/2)、(2/2)..

Table 1(1/2) Performance and characteristics of ACM's

No	Item	ACM－A P/N 4088-1000-001 S/N 001	ACM－B P/N 4088-1000-002 S/N 001
1	Range (Full scale)	≧ ± 8mG [=-15.4mG～+15.4mG]	≧ ± 8mG [=-15.4mG～+15.4mG]
2	Sensitivity (Scale factor)	5V／8mG±5% [= 5.0266 V／8mG]	5V／8mG±5% [= 4.9875 V／8mG]
3	Offset (Bias) (@25℃)	≦ ± 300μG [= +58 μG]	≦ ± 300μG [= -15 μG]
4	Offset temp coef	≦ ± 50μG／℃ [= +11.1 μG／℃]	≦ ± 50μG／℃ [= +11.1 μG／℃]
5	Offset stability	≦ ±100μG／Yr	≦ ±100μG／Yr
6	Non-linearity	≦ ±0.1%F.S [= +0.04%]	≦ ±0.1%F.S [= +0.04%]
7	Resolution	≦ 6μGo-p (=3.75mVo-p)	≦ 6μGo-p (=3.75mVo-p)
8	Noise level	≦ 6.24μGrms(=3.9mVrms) [= 2.5μGrms]	≦ 6.24μGrms(=3.9mVrms) [= 4.0μGrms]
9	Frequency response (±3dB)	≧ 0 ～ 200 Hz [= 0～ 310Hz]	≧ 0 ～ 200 Hz [= 0～ 282Hz]
10	Temp-sensor	－1 μA／° K	－1 μA／° K
11	Power-supply voltage (dc)	±(12.2～12.8) v	±(12.2～12.8) v
12	Current-consumption (@ quiescent)	≦±20mA [=+15.1、-18.3 mA]	≦±20mA [=+19.4、-15.9 mA]
13	Seal	laser weld /glass hermetic	laser weld /glass hermetic
14	EMC／EMI	as specified in PLANET-B CS,CE,RS,RE	

note : [actual shipping data]

Table 1(2/2) Performance and characteristics of ACM's

No	Item	ACM－C P/N 4088-1000-003 S/N 001	ACM－D P/N 4088-1000-004 S/N 002
1	Range (Full scale)	≧ ± 500 mG [=-750mG～+750mG]	≧ ± 20G [=-30.8G～+30.8G]
2	Sensitivity (Scale factor)	5V／500mG±5% [= 5.1164 V／500mG]	5V／20G±5% [= 5.0242 V／20G]
3	Offset (Bias) (@25℃)	≦ ±2500μG [= +21 μG]	≦ ± 3mG [= −2.56 mG]
4	Offset temp coef	≦ ± 30μG／℃ [= −0.7 μG／℃]	≦ ±100μG／℃ [= +36.5 μG／℃]
5	Offset stability	≦ ±100μG／Yr	≦ ±100μG／Yr
6	Non-linearity	≦ ±0.1%F.S [= 0.000%]	≦ ±0.1%F.S [=− 0.001%]
7	Resolution	≦100μGo-p (=1.0 mVo-p)	≦ 4mGo-p(=1.0mVo-p)
8	Noise level	≦ 390μGrms(=3.9mVrms) [= 350μGrms]	≦ 5mGrms(=1.25mVrms) [= 4mGrms]
9	Frequency response (±3dB)	≧ 0 ～ 200 Hz [= 0～ 510 Hz]	≧ 0 ～ 20 Hz [= 0～1000 Hz]
10	Temp-sensor	−1 μA／° K	−1 μA／° K
11	Power-supply voltage (dc)	±(12.2～12.8) v	±(12.2～12.8) v
12	Current-consumption (@ quiescent)	≦±25mA [=+18.3、-14.6 mA]	≦±50mA [=+19.8、-14.1 mA]
13	Seal	laser weld /glass hermetic	laser weld /glass hermetic
14	EMC／EMI	as specified in PLANET-B CS,CE,RS,RE	

note : [actual shipping data]

5. 3. 4. 3 Interface condition & thermal characteristics

(1). Mechanical interface condition of ACM's

Mechanical interface condition of ACM's are shown in Table 2.

Table 2 Mechanical interface condition of ACM's

Unit name ; ACM-A,B,C,D

No	Item	Contents	Remarks
1	Weight	0.1 Kg ± 0.01 Kg	each ACM
2	Dimension	53 mm × 38φmm	See Figure 2
3	Center of gravity	See Figure 2	
4	Moment of inertia	IX 0.09 Kg·cm^2	each ACM
		IY 0.19 Kg·cm^2	
		IZ 0.19 Kg·cm^2	
5	Case material	PC Permalloy (comfort to JIS C 2531) Stainless steel (SUS304)	Servo-Amp cover Movement cover (below flange)
6	Diameter of mounting hole	See Figure 2	
7	Accuracy of mount-hole position	See Figure 2	
8	Thickness & width of mounting flange	See Figure 2	
9	Flatness of mounting surface	See Figure 2	
10	Smoothness of mounting surface	3.2S ▽▽▽	
11	Contact area of mounting surface	0.8 cm^2	
12	Mounting provisions	M3 screw to be used (length=8～10mm) Recommended torque is 5kg·cm±10%.	

(2). Electrical interface condition of ACM's

Electrical interface condition of ACM's are shown in Table 3.

Table 3 Electrical interface condition of ACM's

Unit name ; ACM-A,B,C,D

No	Item	Contents			Remarks
1	Electrical interface	Pin assignment of accelerometer	1	Signal out(Hi)	Through signal conditioner output.
			※2	Accel out(Hi)	Direct servo loop signal output.
			※2	Current self-test (Lo)	Self-test input.
			3	+12.5Vdc	Power input.
			4	±12.5Vdc return	Power input.
			4	Signal out(Lo)	Signal output.
			※4	Accel out(Lo)	Signal output.
			4	Temp out (Lo)	Signal output.
			5	-12.5Vdc	Power input.
			※6	Current self-test (Hi)	Self-test input.
			7	Temp out (Hi)	External resister 10kΩ is necessary between pin 7 & 4.
			GND	GND terminal	Case GND Insulation resistance 200MΩ(50Vdc) Insulation break down 100 Vdc
		Note ※; Manufacturer's use only			

(3). Thermal characteristics

Thermal characteristics of ACM's are shown in Table 4.

Table 4 Thermal characteristics of ACM's

Unit name ; ACM-A,B,C,D

No	Item	Contents				Remarks
1	Performed temp.	−30 ℃～ +60 ℃				
2	Functional temp.	−30 ℃～ +60 ℃				Heating rate and cooling rate shall be less than 3℃/minute.
3	Storage temp.	−50 ℃～ +60 ℃				
4	Turn off temp.	−50 ℃～ +60 ℃				
5	Turn on temp.	−50 ℃～ +60 ℃				
6	Temp monitor point	See Figure 2				
7	Mounting surface treatment	No treatment Stainless steel (SUS304)				
8	External surface treatment	No treatment PC Permalloy (conform to JIS C 2531)				
9	Thermal optical characteristics for external surface (except mounting-surface)	εH = 0.116				
		αs = 0.25				
10	Heat capacity	67.9 J/℃				(/each ACM)
11	Heat dissipation (/each ACM)	Operate mode	Power consumption			
		off	0.00 W±	0.00	W	
			W±		W	
		ACM−A,B	0.45 W±		W	Max (/each ACM)
		〃	0.43 W±	0.01	W	Nominal (〃)
		ACM−C	0.64 W±		W	Max (〃)
		〃	0.50 W±	0.09	W	Nominal (〃)
		ACM−D	1.02 W±		W	Max (〃)
		〃	0.88 W±	0.10	W	Nominal (〃)

5. 3. 4. 4 External view

External view of each ACM is shown in Figure 2.

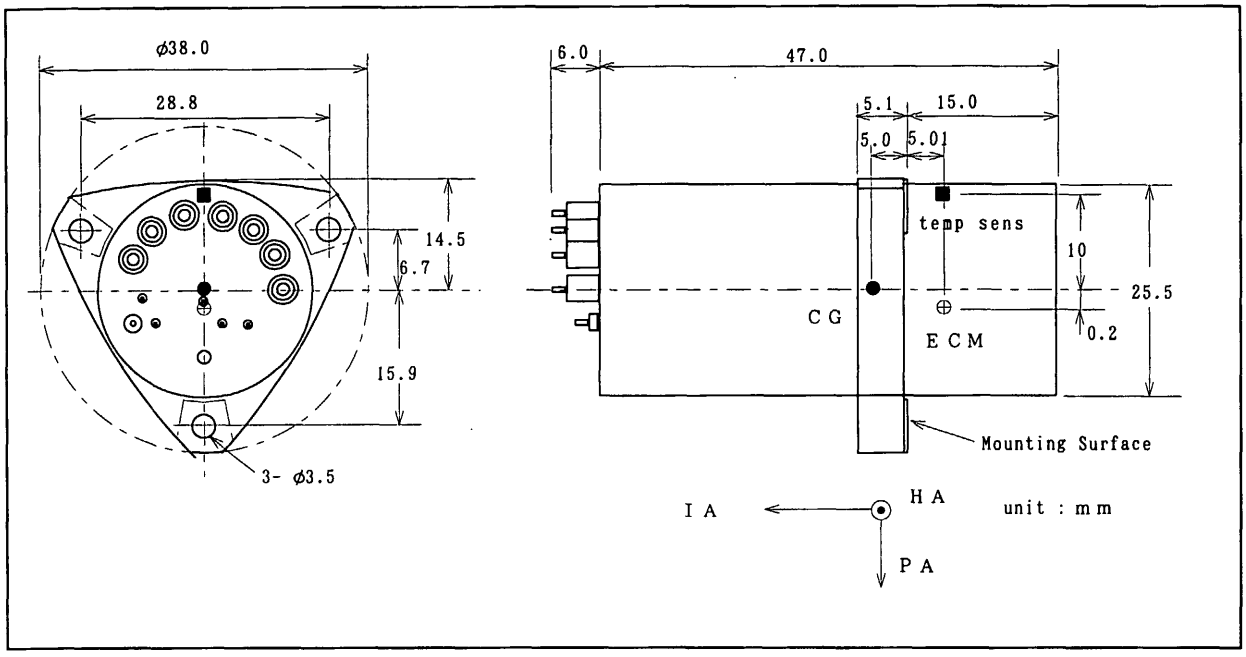

Figure 2. External view of ACM

5.4 Propulsion System

K. Uesugi, S. Sawai, M.Shida (ISAS)
Mitsubishi Heavy Industries, Ltd.

5.4.1 Overview

The PLANET-B propulsion system is required not only to control the attitude of the spacecraft but also to correct trajectory on the course to Mars, and to insert the spacecraft into an orbit around Mars. The total delta-V required is extremely large amount, that is, 1965m/sec.

To comply with such requirements, a dual mode bi-propellant propulsion system is adopted to the PLANET-B. This propulsion system has one 500N bi-propellant (NTO/Hydrazine) thruster for the Trajectory Control Maneuvers (TCM's) and ten 3N mono-propellant (Hydrazine) thrusters for the attitude control maneuvers.

5.4.2 System Description

(1)General

The propulsion system consists of four propellant tanks, one pressurant tank, ten 3N mono-propellant thrusters, one 500N bi-propellant thruster, pipings, valves, filters, and heaters. Both kinds of the thruster work under the regulated pressure. Heaters and temperature sensors are attached for the preheating the thrusters and for thermal control of valves, tanks and pipings. A system block diagram is shown in Fig. 1.

The 3N thrusters are installed in two thruster modules (five thrusters in each module) and the latching valves, filters and a pressurant gas regulator are separately installed in three valve modules. All connecting points along the pipe lines from the tanks to the thrusters are completely welded to preclude any possibilities of leakage of the propellant and pressurant gas.

As illustrated in Fig. 2, each component of the propulsion system is allocated symmetrically so as to make its center of gravity (CG) drop on the spin axis of the spacecraft.

(2)Tank Module

The propulsion system has three kinds of tank: pressurant (Helium gas) tank, two fuel (Hydrazine) tanks, and two oxidizer (NTO) tanks. All these tanks are supported by the base panel and the truss structures, and this configuration gives a symmetry of the allocation, an effective utilization of space in the spacecraft, and consequently contributes to reduce weight of the spacecraft.

Fuel and oxidizer are loaded in the teardrop shaped tanks made of titanium alloy(Ti-6Al-4V). The tank shell is formed by the super-plastic forming process and fabricated by the electron beam welding. Each fuel tank is 569 mm in diameter and 706 mm long, and its volume is about 97 liters. About 88 liters of fuel is loaded in each tank. The size of an oxidizer tank is 421 mm in diameter and 525 mm long, and its volume is about 40 liters. About 37 liters of oxidizer is loaded in each tank. Propellant in the tank is separated from the pressurant gas by the centrifugal force caused by spinning of the spacecraft after launch. It means that no specific propellant management device (PMD), such as bladder or diaphragm, is installed inside tanks.

The pressurant tank has a spherical shape its shell is made of titanium alloy wrapped with carbon fiber. This composite structure has been newly developed to decrease its weight and adopted to PLANET-B as the first time. The outline of the pressurant tank is shown in Fig. 3.

(3)Thruster Module

The RCS has two thruster modules; Thruster module-A and B. Both modules have the same structures and are installed on the opposite sides of the spacecraft base panel respectively. Each of these thruster modules is equipped with five 3N mono-propellant thrusters; two axial, one radial, and two tangential thrusters.

Though the RCS thruster can generate 3 to 1.4 Newton thrust in the blowdown mode, it is fixed to 2.3 Newton in the PLANET-B mission in which the regulated pressure is provided. Every 3N thruster consists of a hydrazine decomposition chamber (catalyst bed), a nozzle, a thruster valve etc. Typical materials are Haynes alloy 25 and SUS 304, and SHELL 405 catalyst is used for the hydrazine decomposition. A heater and a temperature sensor are equipped to every chamber so as to heat up the catalyst bed to about 100 degree centigrade prior to firing. A space proven reliable double seated valve is adopted for the thruster valve.

The fill and drain valves are installed on the thruster modules to accessibility from the outside of the spacecraft and to make the ground operations easier.

(4) Orbit Maneuver Engine

An orbit maneuver engine (OME) is installed under the bottom of the spacecraft trough the truss structure which is also supporting the tanks mentioned above. Bi-propellant (NTO/Hydrazine) thruster which can produce 500 Newton thrust has been newly developed for the orbit maneuvers in the PLANET-B mission. This thruster consists of an injector, a combustion chamber, a nozzle and thruster valves for the fuel and oxidizer as shown in Fig. 4. Material of the chamber is Niobium alloy with silicide coating and the nozzle is made of titanium.

The heaters and a temperature sensor are attached to the injector to heat it up prior to firing in orbit.

(5)Valve Module

Propellant and pressurant control valves except for the fill and drain valves are assembled into three valve modules; pressurant control valves in the valve module-A and propellant control valves in the valve module-B and -C. These modules are installed on the base plate.

A regulator (RG) installed in the gas feed line in the valve module-A regulates primary gas pressure of upstream (250 kgf/cm^2 at beginning of the mission) to the secondary pressure of downstream (14 kgf/cm^2 throughout the mission). Each pressure is monitored with the pressure transducers (P1, P2, P3 and P4). A relief valve (RV) is equipped in the gas feed line under the secondary pressure in order to prevent over pressurization of the downstream and the propellant tanks. Also equipped with each gas feed line after it branches to the lines to the fuel and oxidizer tanks are check valves (CV1 and CV2) which prevents any unexpected mixture of the vapors of NTO and Hydrazine. Three latch valves (HLV, LV1 and LV2) are installed for safety during the ground operation and the launch phase. Another latch valve (LVm) is installed in the gas feed line connecting two fuel tanks in order to prevent the fuel migration on the launch pad, because the M-V launch vehicle is launched not vertically (90 degrees) but with elevation angle up to 80 degrees.

The propellant feed lines in the valve module-B and -C have four latch valves (LV3, LV4, LV5 and LV6) to ensure safety of the ground operations and launch phase. The latch valves in the hydrazine feed lines to RCS (LV3 and LV4) would be closed in the contingency or degradation mode caused by malfunction of the RCS thruster(s) in one of the thruster modules.

(6) Thermal Control

Temperature of the hydrazine fuel has to be maintained at any time within the range from +5 to +70 (+5 to +50 for tanks) degree centigrade. Especially in the thermal design of the spacecraft for Mars mission, the fact that solar power at the distance of Martian orbit is a half of it at Earth distance should be taken account. Thus the thermal blankets (Multi-layer thermal insulation film) and electrical heaters are applied for the thermal control of the propulsion system.

After the Martian orbit injection, the temperature control lower limit of the gas tank and the oxidizer tank will be set as –30 and –11 degree centigrade respectively. It aims to reduce the electric power consumption.

The heaters and temperature sensors are connected to the Heater Control Electronics (HCE) to control ON/OFF of the power supply to the heaters automatically. The installation position of temperature sensors is shown in the Fig. 5. As for the preheating of the mono-propellant and bi-propellant thrusters, Automatic control is used together to prevent over heating though ON/OFF of each heater is operated manually by a command sent from the ground station.

5.4.3 Performance

The specification performance of the propulsion is listed in Table 1. They are estimated on the assumption of the following characteristics of the spacecraft.

Dry Weight of the spacecraft: 260.4 kg
Weight of initially loaded propellant: 284.6 kg
Moment of Inertia around the spin axis of the spacecraft: 254kg m^2 (dry)

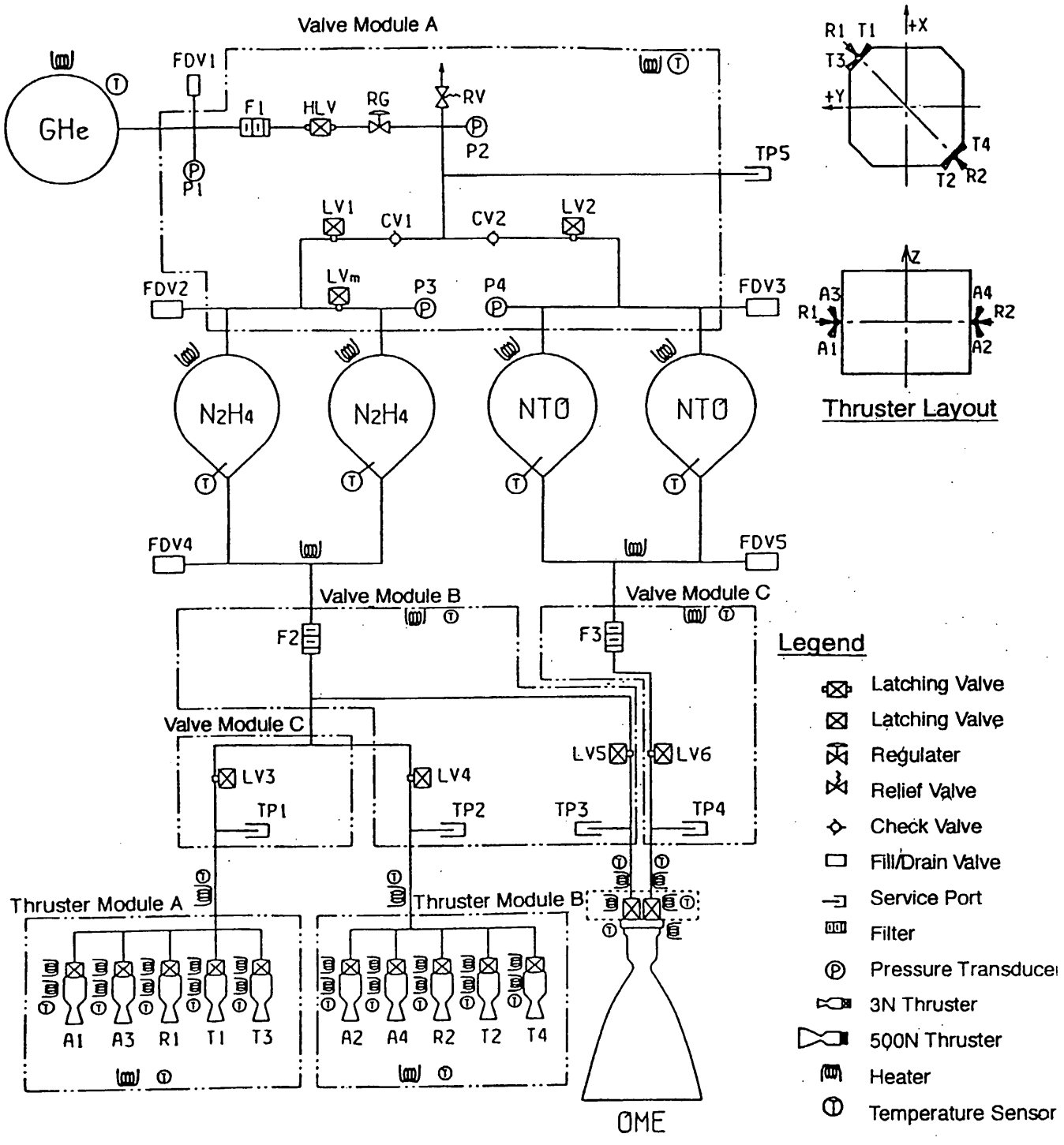

Fig.1 Flow Diagram of Propulsion System

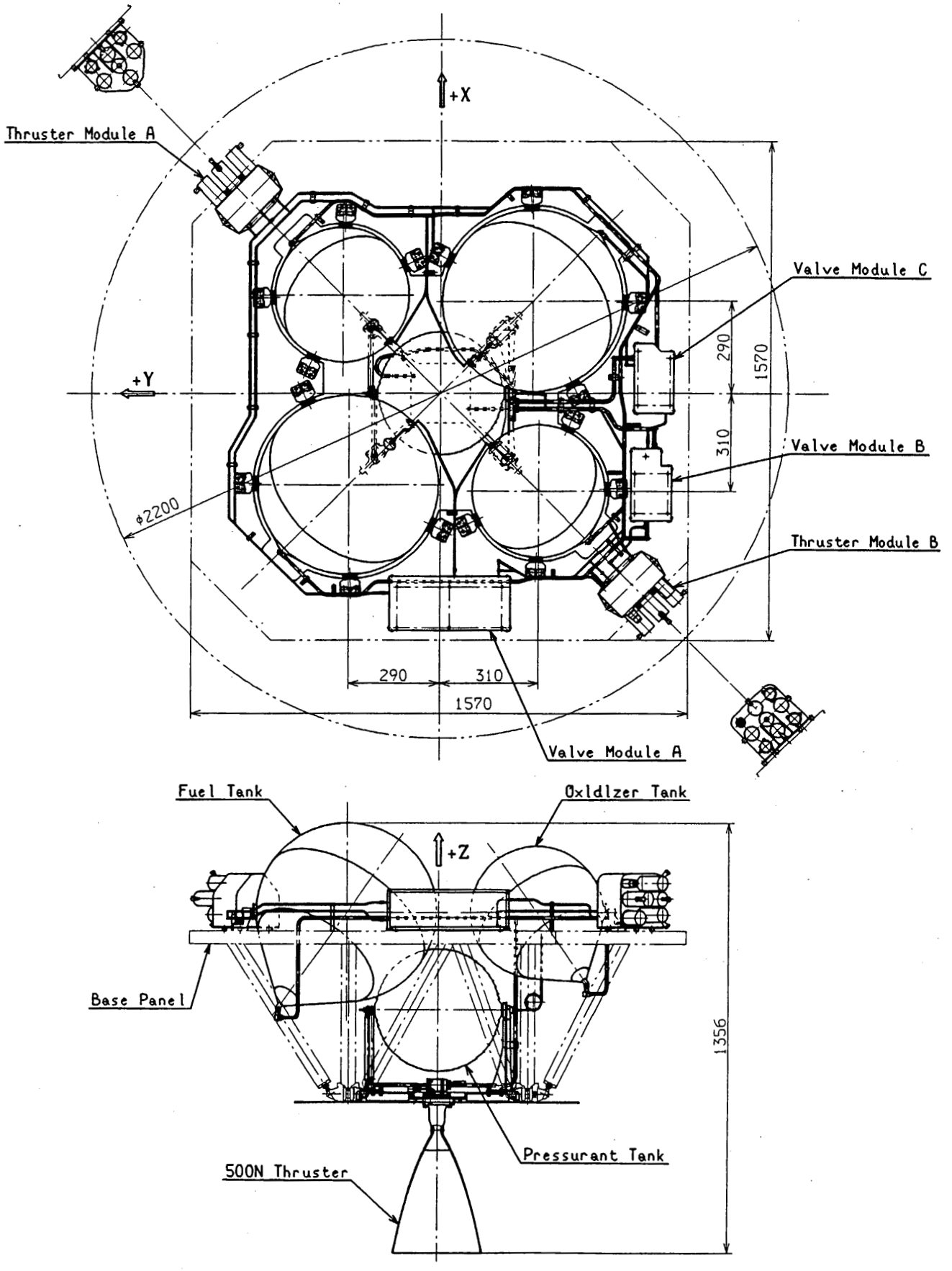

Fig. 2 Arrangement of Propulsion System

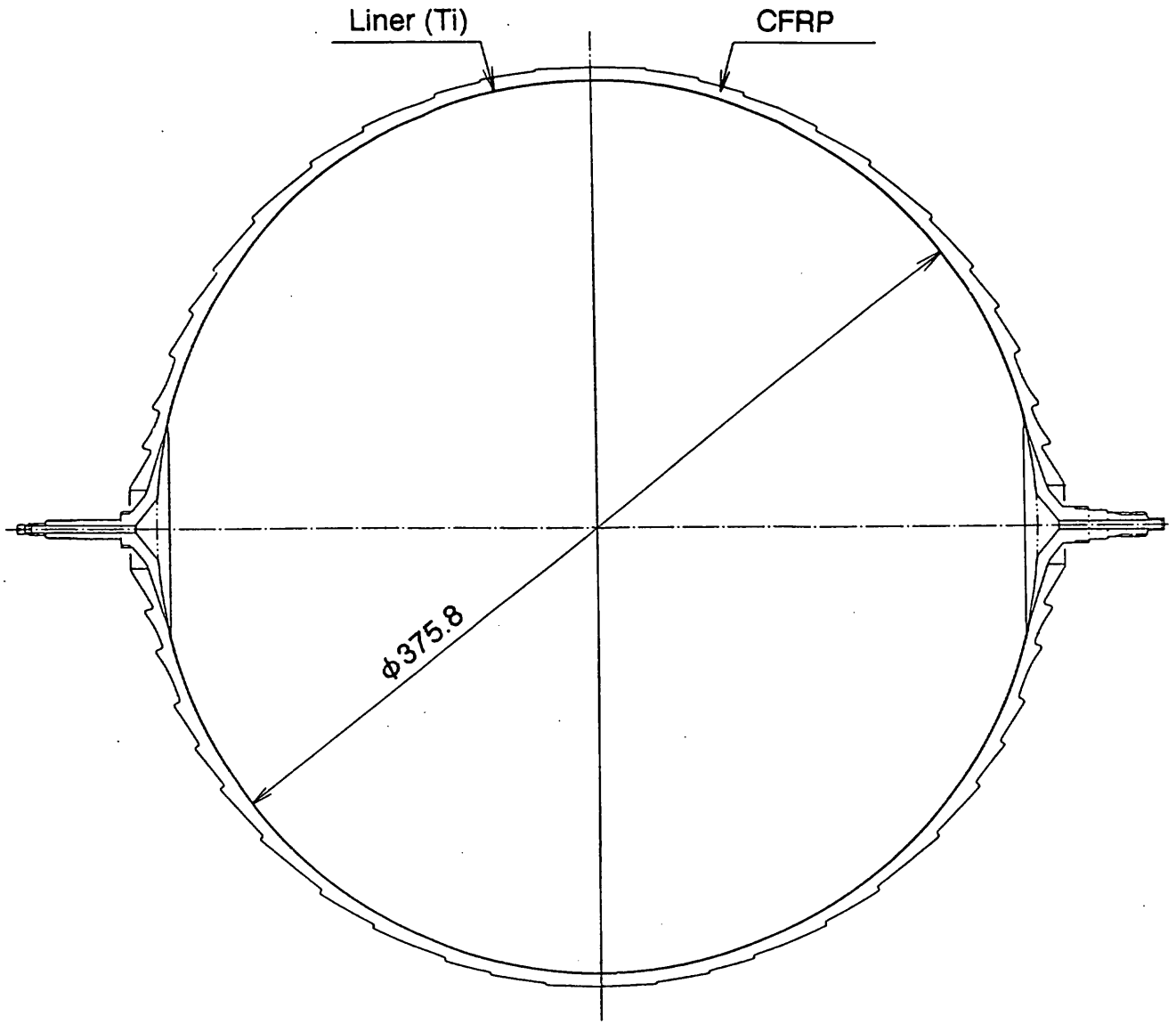

Fig.3 Outline of Pressurant Tank

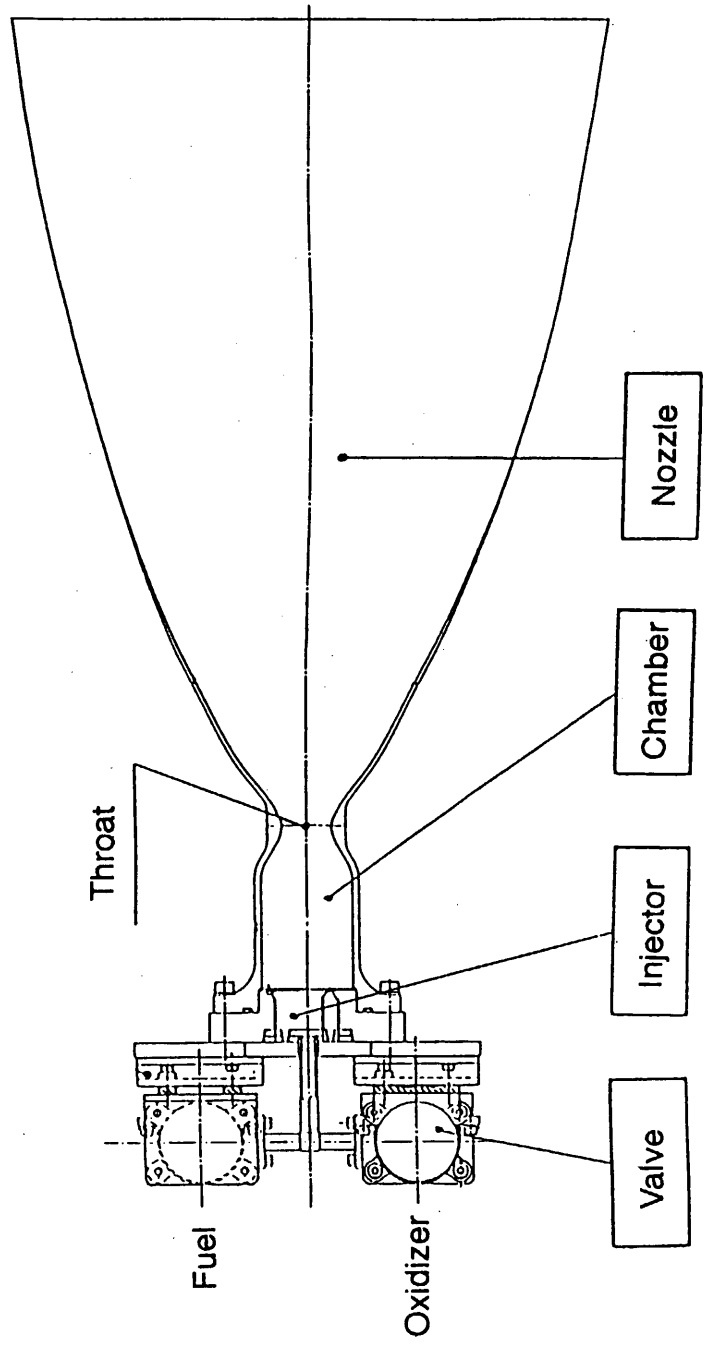

Fig.4 Outline of 500N Bipropellant Thruster

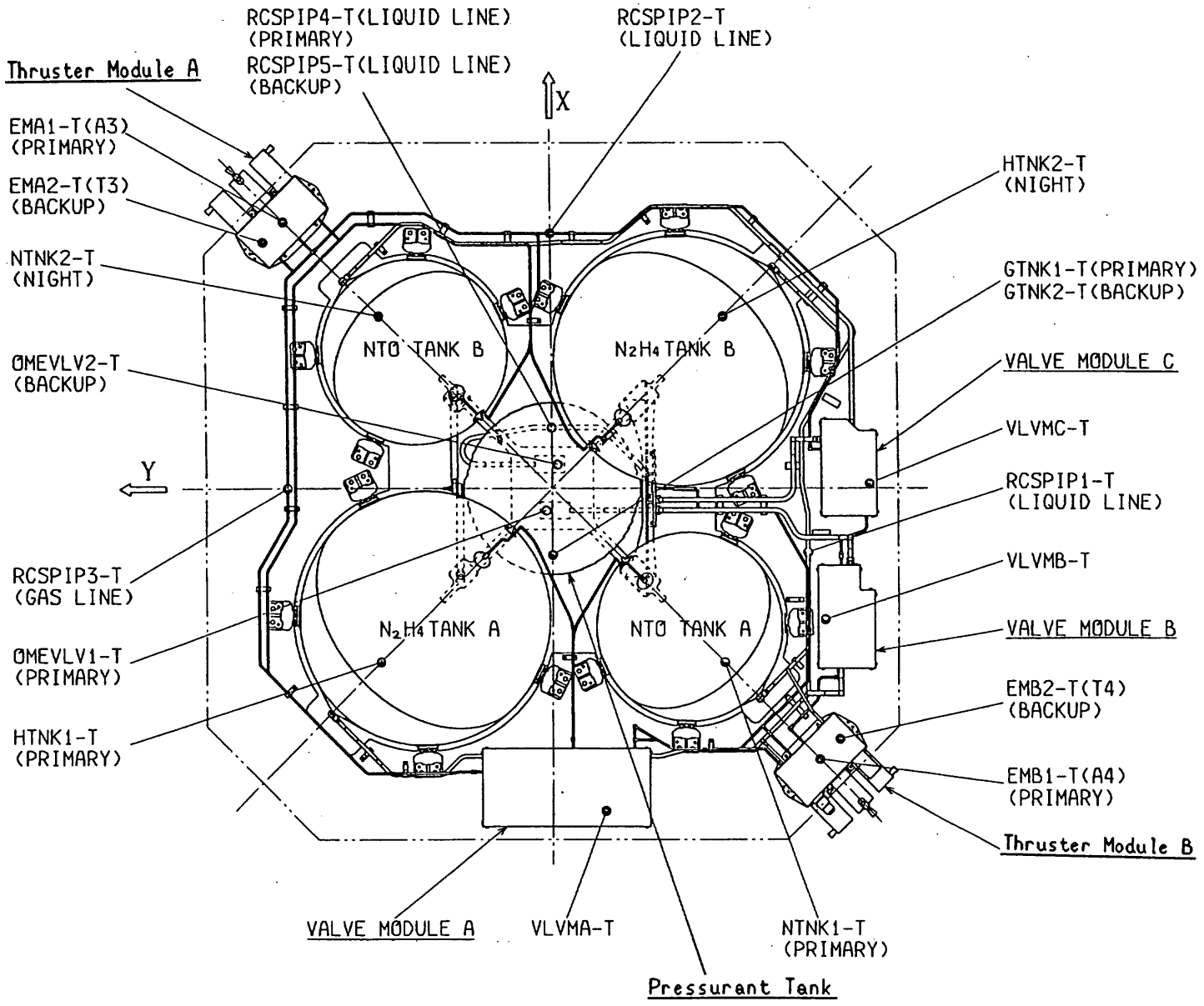

Fig. 5 Installation position of temperature sensors

Table 1 Performance of Propulsion System

Item		Initial Capability (nominal)	Remarks
1. Thrust	Radial & Tangential Thruster	2.3 N	
	Axial Thruster	2.2 N	Canted thruster
		500 N	OME
2. Total Impulse		787500 Ns	Wpl=32.6kg, Isp=150sec(pulse) Wp2=243.5kg, Isp=310sec
3. Propellant weight		284.6 kg	
4. Precession Torque		4.3 Nm (2.2 Nm)	R=1m 2 axial thrusters operation ( ) shows 1 thrusters operation
5. Spin Torque		4.6 Nm	R=1m 2 tangential thrusters operation
6. Acceleration		0.094 m/s^2	OME operation $W_{S/C}$=545kg
7. Angular Velocity of Precession		0.33 deg/s (0.17 deg/s)	
8. Spin Acceleration		0.13 (rpm)/s	
9. Minimum Pulse Width		100 msec	RCS thruster
10. Precession Angle per Pulse		0.033 deg (0.017 deg)	
11. Spin per Pulse		0.013 rpm	
12. Propulsion System Weight		346.5 kg (wet) 61.9 kg (dry)	

5.5 Commands and Telemetry Items

K.Ninomiya, I.Nakatani, T.Hashimoto
NEC Corporation

5.5.1 Command Items

Discrete commands and Block commands for AOCS are summarized in Appendix C

5.5.2 Telemetry Items

(1) AOCS packet sequence

Telemetry format and packet sequence of the spacecraft is summarized in Appendix-A.

(2) Secondary headder for AOCS packets

Five types of AOCS packets are used. They are identified by secondary headder embedded in the top of user area of each packet.

Packet Headder	Secondary Headder
05H : AOCSDMP	N/A
07H : AOCS	01H : AOCS-L2
	02H : AOCS-L3
	03H : AOCS-M1
	04H : AOCS-M2
	05H : AOCS-M3

(3) AOCS telemetry

(a) HK packet

AOCS telemetry in HK packet consists of:

- Hardware status of AOCE
- Attitude sensor(SSAS,SSC) data
- Onboard software status

The data item is carefully selected so that cruise phase operation, such as attitude determination and AOCE monitoring, is possible with very limited telemetry capability.

(b) AOCSDMP packet

AOCSDMP packet dumps program and data of memory in CPU modules.

(c) AOCS-Launch packets

AOCS-L2, and AOCS-L3 are used in launch phase where GRS and ACM-D takes major part in AOCS operation. The packets are almost filled with high rate sample data of these sensors.

(d) AOCS-Monitor/Maneuver packets

Major contents of AOCS-M1 packet is data of SSAS and SSC. These data are used for attitude determination on the ground. AOCS-M2 packet is dedicated for monitoring AOCE onboard software (OBS). AOCS-M3 packet is dedicated for dumping high rate sample data of ACM-A,ACM-B and ACM-C.

6 Electrical Power System (EPS)

6.1 Overview

The EPS for PLANET-B is required to provide the unregulated bus power and the regulated secondary power to all subsystems continuously during the mission life.

The conventional secondary voltages in EPS provide the voltages to all subsystems.

In PLANET-B, a distributed power conversion method is adopted for the purpose of the minimization of the weight and EMI, and the failure mode separation of instruments.

This method is to set power supply unit (PSU) in each subsystem and to distribute the secondary power conversion function at each PSU.

The EPS for PLANET-B consists of two solar cell paddles(SCP), two batteries(BAT), a power controller and a distributor (PCD), shunt dissipaters(SHNT), and nine power supply units (PSU).

An EPS block diagram is shown in Figure 6.1-1. The main function of EPS is as follows:

(1) To convert solar energy to electrical energy by SCP in sunlight.
(2) To provide the generated power directly to each subsystem through the primary bus power line and the time store part power into BAT.
(3) To provide the BAT stored power to each subsystem in eclipse.
(4) To control the bus voltage under the upper limit by SHNT.
(5) To control and the manage charge current, the voltage, the temperature, and the capacity of BAT.
(6) To control and monitor the status of EPS by command and telemetry.
(7) To convert the primary bus voltage to the secondary voltage by the respective PSU for each subsystem.

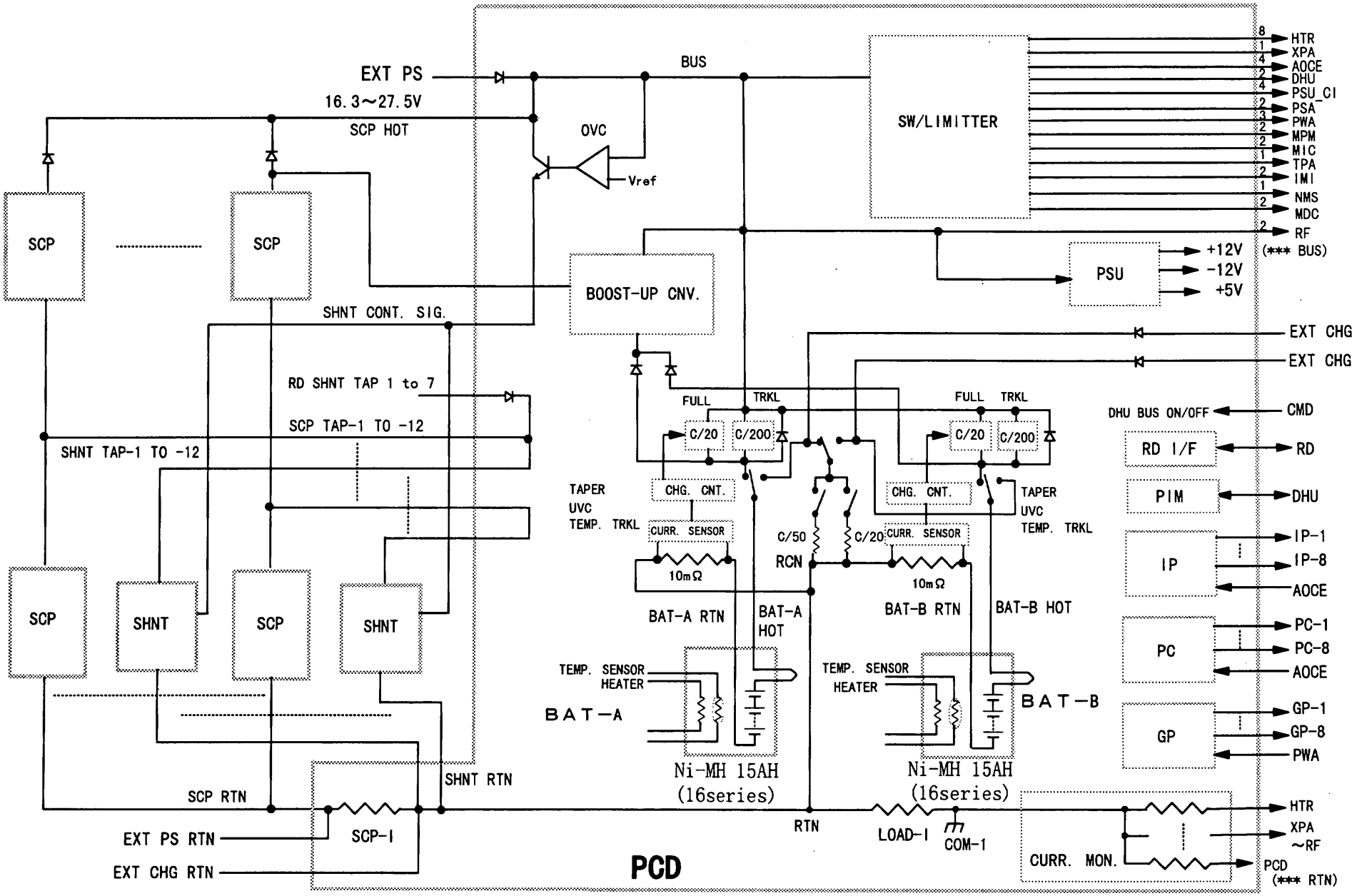

Figure 6.1-1 PLANET-B EPS Block Diagram

6.2 Solar Cell Paddle (SCP)

6.2.1 Overview

The solar cell paddle (SCP) converts solar energy into electrical energy and supplies it to electrical of PLANET-B. The PLANET-B is equipped with two solar array wings, each of which consists of three solar cell panels. The solar cell paddle can generate power of 220W min. and support the PLANET-B mission for more than 3 years.

The weight of SCP is shown in Table 1.

Table 1 Weight of SCP

UNIT NAME	TARGET
Solar cell assembly	7.0 kg
structures and mechanisms	13.4 kg
TOTAL AMOUNT	20.4 kg

(1) Components

The solar cell paddle is equipped with solar panel and mechanism. The solar panel consists of a solar cell assembly and structures. The mechanisms consists of clamp release mechanisms and deployment mechanisms.

(2) Performance

The performance of SCP is as follows:

a) the power supply to electrical equipment of PLANET-B

b) the fold and release of the solar panels

(3) Magnetic Cleanliness

Magnetic Cleanliness is affected both by the electrical current patterns of the array and by the presence of magnetic materials on the array. The way of magnetic cleanliness is as follows:

a) To minimize the effects of current loops.

The return lines route the substrate backside along the solar cell strings.

b) To ground electric charge on the entire array surface (cover-glass of the solar cells and cell type diodes, substrate, wires, and so on).

6.2.2 Functions

6.2.2.1 Electrical Functions

The electrical output from the solar cells is collected by solar cells ,and is transmitted by cables, flat conductors to supply the solar cell power.
Considering the environmental items, which the change in the array-to-sun distance during mission life, the range of the incidence angles of the sunlight, the change of the and so on, the arrays constitution is 86 cells in parallel by 55 cells in series.
The cell strings layout of PLANET-B is designed for maximum panel performance.

The solar cell for the PLANET-B solar panel are high efficiency silicon cells.
Functions of the solar cell panel are as follows.

(1) SOLAR CELL

PLANET-B uses Non-Reflective Surface(NRS)/Back Surface Field(BSF) Silicon cells with an average efficiency of 16.8%. The solar cell characteristics are shown in Table 2.

(2) COVER GLASS (CG)

The PLANET-B solar cell has conductive coating cover glass(CCCG). This CCCG has ITO coating. The CCCG characteristics are listened in Table 3.

Table 2 Solar cell characteristics summary

Type	NRS/BSF Silicon
cell size	2cm × 4cm
Thickness (μ mt)	100
Resistance (Ω-cm)	2
Anti Reflective coating	TiO_2-Al_2O_3
Grid Number	37/2 cm
Cell Efficiency (%)	16.8
Voc (V)	0.630
Isc (A)	0.376
Vmp (V)	0.530
Imp (A)	0.343
Radiation Analysis	
Equivalent 1MeV Electrons	
For Voc,Pmax (e/cm2)	1.706×10^{13}
For Isc (e/cm2)	6.853×10^{12}

Table 3 CCCG characteristics summary

Thickness (μ mt)	100
UV Reflectance 50% Cut off (nm)	355±15
Conductive Coating	ITO

6.2.2.2 Mechanical Functions

Structures and mechanisms of solar cell paddles consist of;

1) Substrate on which solar cells mounted
2) Clamp Release Mechanism (CRM) that restrains and release the folded solar panels.
3) Deployment Mechanism (DLM) that deploys the released solar panels and maintains them in the deployed position under on-orbit environments including RCS/OMS firings.

(1) Configuration

The stowed and deployed solar array configuration are presented in Figures 6.2.2.2-1 and -2. PLANET-B spacecraft is equipped with two solar array wings, each of which consists of three solar panels. Two clamp cables, as shown in Figure 6.2.2.2-1, restrain the stowed solar panels. Firing of wire cutters the clamp cables, enabling the solar panels to deploy.

In addition to the electrical power supply, the wing provides the mounting interface of a scientific sensor (PET-S).

(2) Substrate

Substrate provide the required solar cell mounting area or 4.58 m^2 per two wings. Dimensions of a wing are shown Figure 6.2.2.2-3. The substrate is made of honeycomb sandwich panel with CFRP facesheets, reinforced with CFRP stiffeners. Design requirements for the substrate are;

a) Strength

quasi-static loads during launch :	Table 6.2.2.2-1
random vibration environments :	vertical Table 6.2.2.2-2
	in plane Table 6.2.2.2-3
acoustic environments :	Table 6.2.2.2-4
end-of travel deployment latch impact loads :	6.0 kgfm
quasi-static loads during OMS burn :	approx. 0.4G (tentative) for deployed configuration

b) Stiffness

stowed :	greater than 25 Hz (tentative)
deployed :	greater than 0.5 Hz (tentative)

c) Interfaces

- To accommodate M-V launch vehicle nose fairing constrains.
- To accommodate the spacecraft structures mechanical interfaces.
- To provide the mounting interface of PET-S on the outermost panel..

(3) Clamp Release Mechanism (CRM)

CRMs are pyrotechnically actuated mechanisms that restrain and release the stowed solar panels. The wings are wrapped around the spacecraft by two, pre-tensioned clamp cables to withstand mechanical environments during launch. Two wire cutters (primary and back-up cutters) are installed on each clamp cable, thus enabling the mechanisms to be fully redundant in both electrical and mechanical senses.

(4) Deployment Mechanism (DLM)

Once solar panels released, the spring-actuated DLMs deploy them. Deployment is initiated while the spacecraft is spinning at approximately 2.7-rpm spin rate, which decrease to approximately 2 rpm after deployment completion.

DLM consists of hinge assembly, spring, a lock mechanism, and a microswitch. Each hinge assembly joins the adjacent solar panels and deploys them to the latched position with constant-force springs. Once in the latched position, the lock mechanism engages with the hinge assembly to maintain the deployed configuration against on-orbit inertial loads induced by the spacecraft spinning, attitude control maneuvers and OMS burn.

Latch status of each panel can be monitored via a microswitch provided on the hinge assembly.

Table 6.2.2.2-1 Quasi-static Loads During Launch

DIRECTION		quasi-static loads level(G)
AXIAL		25.0
LATERAL	VERTICAL	15.0
	IN PLANE	20.0

Table 6.2.2.2-2 Random Vibration Environments(VERTICAL)

Frequency(Hz)	PSD[G^2/Hz]
20	0.3
20 ~ 40	+8.24dB/oct
40 ~ 50	2.0
50 ~ 100	-13.0dB/oct
100 ~ 400	0.1
400 ~ 500	+9.4dB/oct
500 ~ 1000	0.2
1000 ~ 2000	-13.0dB/oct
2000	0.01
Duration : 45sec, 16.3Grms	

Table 6.2.2.2-3 Random Vibration Environments(IN PLANE)

Frequency(Hz)	PSD[G^2/Hz]
20 ~ 40	1.0
40 ~ 64.5	-7.6dB/oct
64.5 ~ 80	0.3
80 ~ 100	-2.3dB/oct
100 ~ 200	0.25
200 ~ 240	-3.7dB/oct
240 ~ 1000	0.2
1000 ~ 2000	-13.0dB/oct
2000	0.01
Duration : 45sec, 16.8Grms	

Table 6.2.2.2-4 Acoustic Environments

1/1 OCTAVE CENTER FREQUENCY(Hz)	PRESSURE LEVEL(dB)
31.5	136.5
63	135.5
125	143.0
250	143.0
500	142.0
1000	139.5
2000	134.0
4000	130.5
8000	124.5
O.A	148.8
dB REFERENCE	2×10^{-5} N/m^2

Duration : 45sec

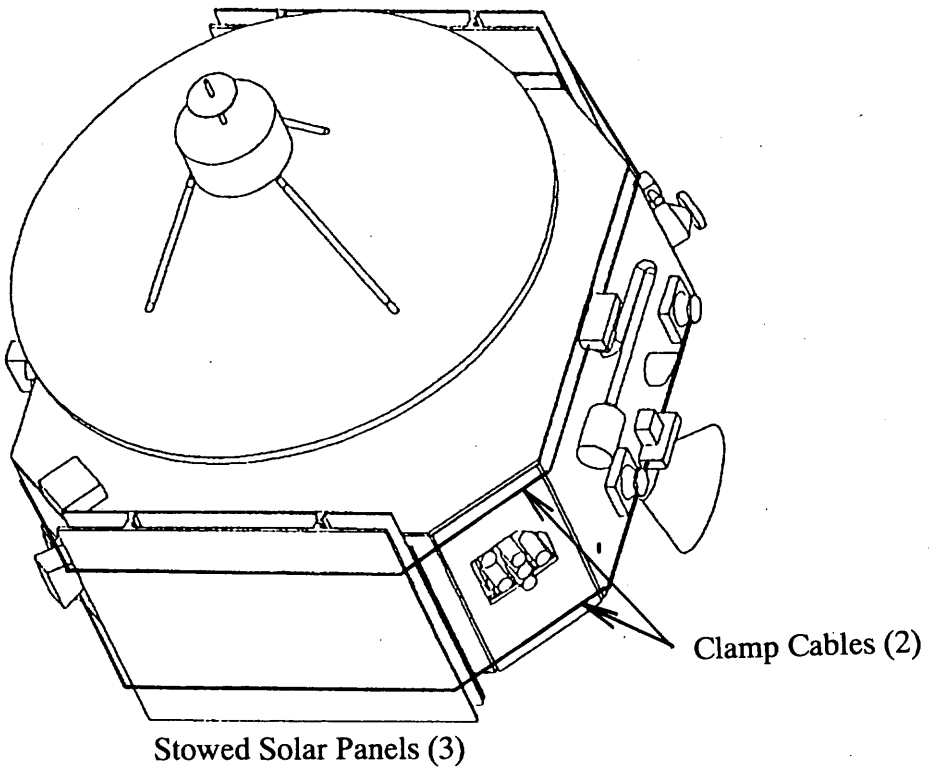

Figure 6.2.2.2-1 Stowed Configuration

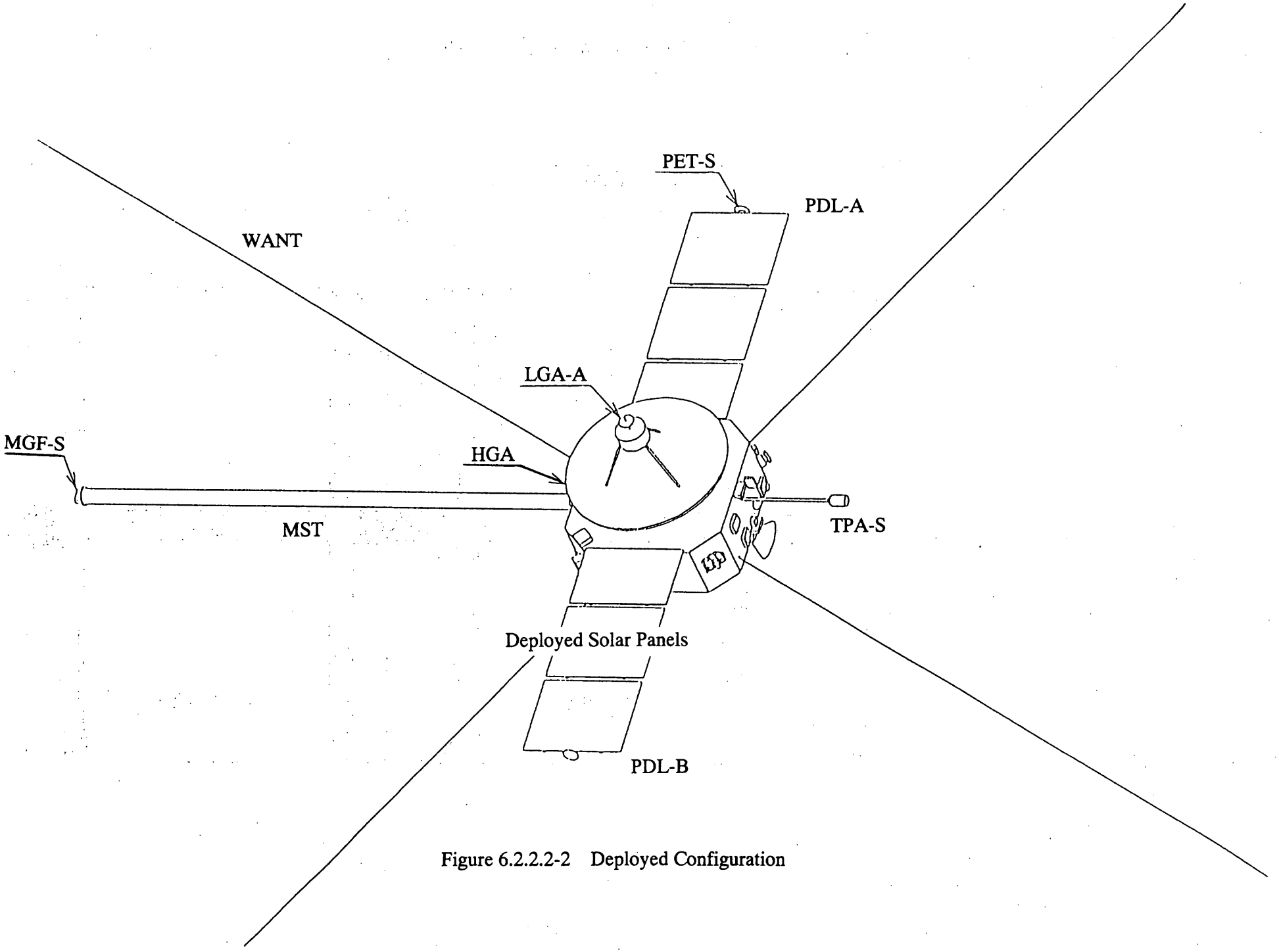

Figure 6.2.2.2-2 Deployed Configuration

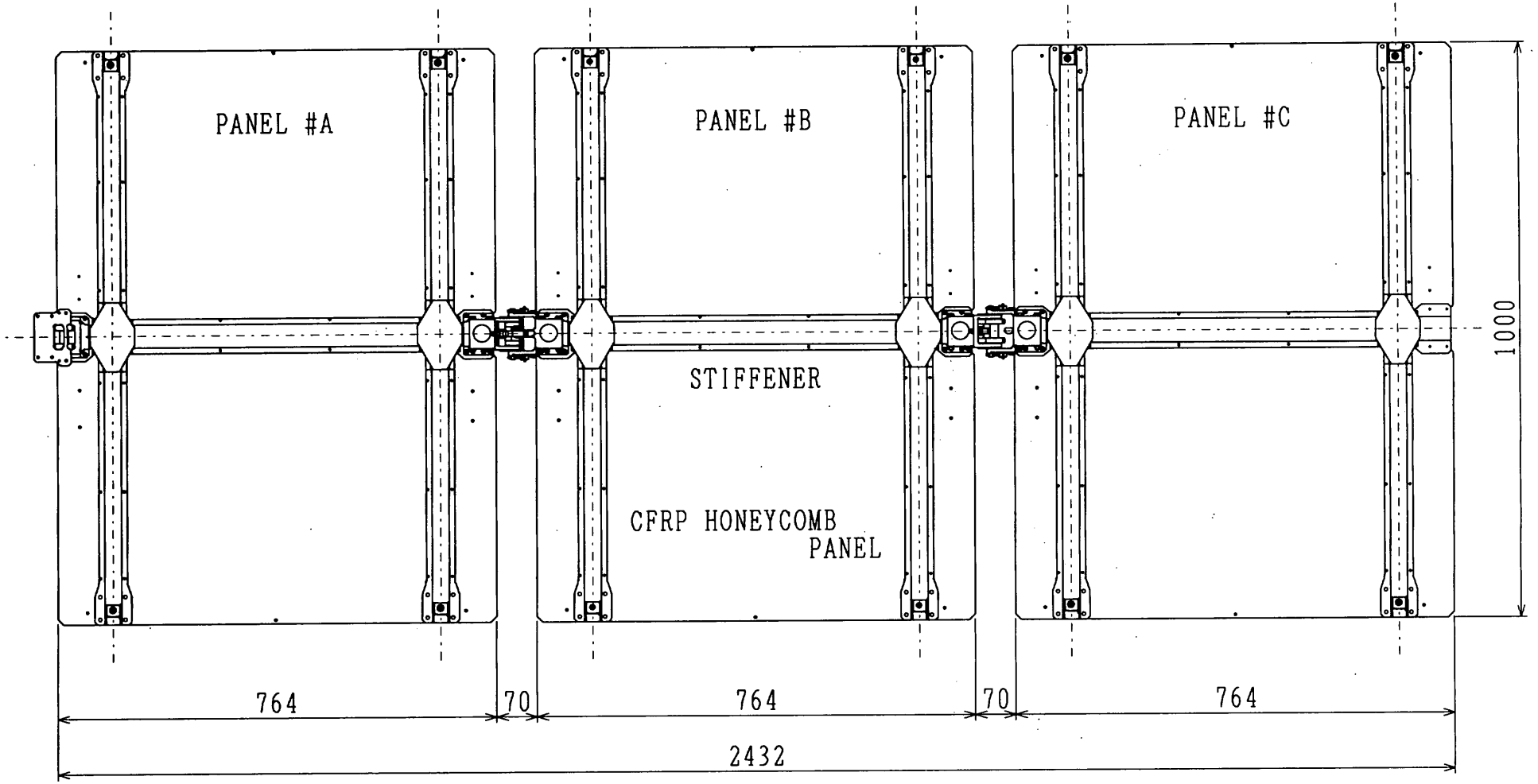

Figure 6.2.2.2-3 Wing Configuration (Deployed)

6.3 Battery (BAT)

6.3.1 Overview

BAT stores part of the SCP generated power in sunlight and provides the stored power to each subsysytem in eclipse.

BAT subsystem consists of two battery units, each of which involves 16 series-connected cells.

Ni-MH (Nickel-Metal Hydride)battery cells are used for PLANET-B to minimize the BAT weight and volume. The rated capacity of the PLANET-B battery cell is 15AH, and the total BAT capacity is 30AH.A block diagram of BAT is shown in Figure 6.3-1.

The main characteristics of BAT are as follows.

(1) Battery cell type

15AH Ni-MH cell

(2) BAT configuration

16 cells × 2 units

(3) Output voltage

16.0V ~ 24.8V

(4) D.O.D. limitation

68%

(5) Size

190mm × 270mm × 115 mm /Unit

(6) Weight(BAT Subsystem)

17.5 kg in total

6.3.2 Functions

The main functions of BAT are to store the SCP generated power in itself in sunlight and provide the stored power to each subsystem through PCD in eclipse.

BAT subsystem consists of two battery units, and two units are connected in parallel in PCD to have the total capacity of 30AH.

The control and management of the battery charge/discharge current, voltage, and capacity of BAT is conducted by PCD. The temperatures of each battery units are controlled by HCE.

6.3.3 Operation

In sunlight, part of the SCP generated power is stored in parallel into the two battery units at the high rate charge level(1/20C). When the charge is completed, the charge rate is automatically changed to the low charge rate(1/200C).

In eclipse, the stored power is directly provided in parallel from the two battery units to each subsystem through PCD. To protect overcharge, each battery unit outputs the battery voltage signal to PCD.

An under voltage control(UVC) signal is outputted from PCD when either of the battery unit voltage signals reaches a lower voltage limit.

Each battery unit has also a temperature sensor and heaters so that its temperature is controlled by HCE.

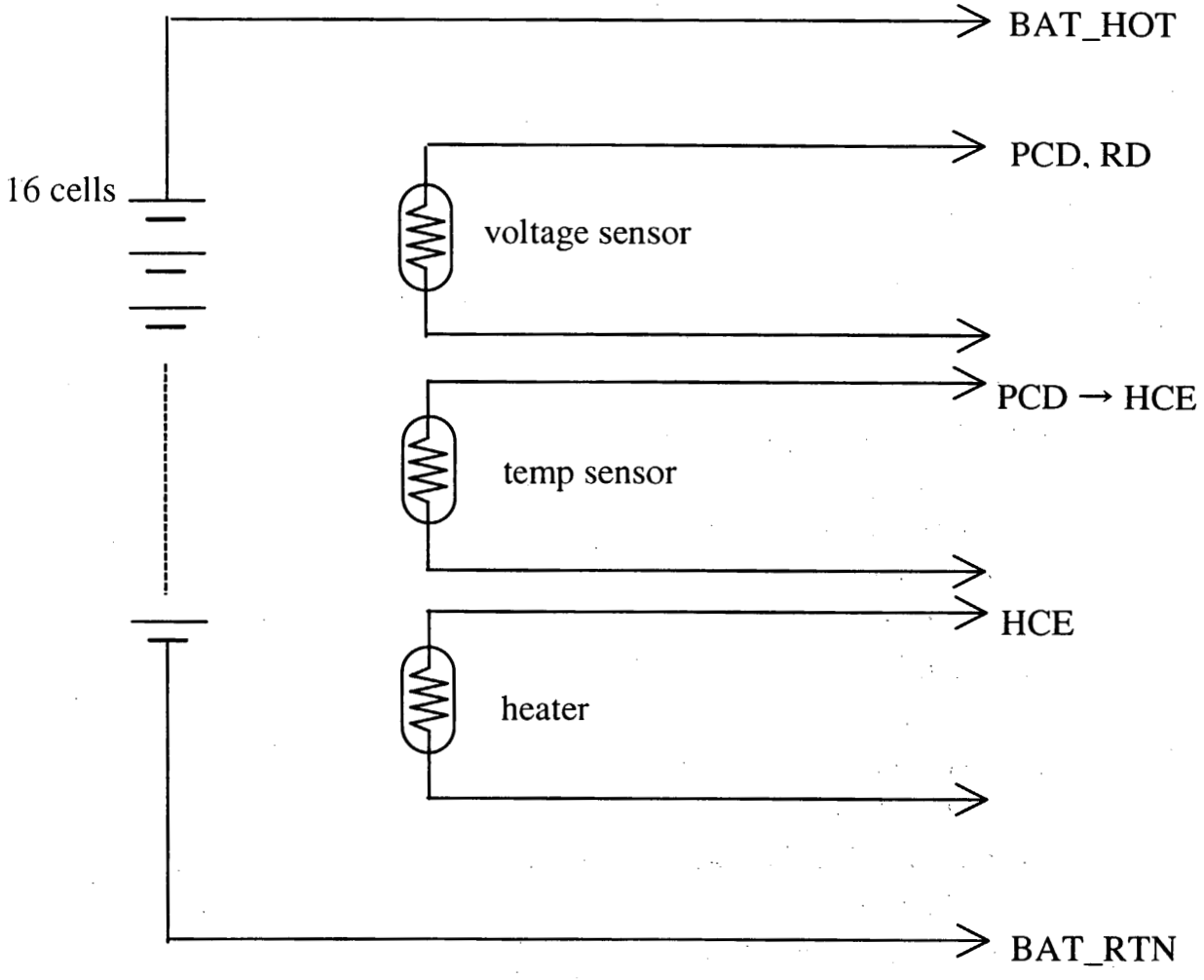

Figure 6.3-1 BAT BLOCK DIAGRAM

6.4 Power Controller and Distributor(PCD)

6.4.1 Overview

In PLANET-B, the distributed power conversion method is adopted. Among the components of EPS, PCD has the function to distribute the unregulated primary bus power to each instrument. The PCD has also switches to turn on/off PSU for each subsystem.

Besides the primary bus power distribution function, PCD has the BAT charge/discharge control function.

In PLANET-B, BCCU(battery charge/discharge controller) is eliminated for the purpose of minimization of EPS weight and the BAT charge control function is carried out by PCD.

A block diagram of PCD is shown in Figure 6.4-1.

The main characteristics of PCD are as follows.

(1) Bus Voltage
    16.3V ~ 27.5V
(2) Under Voltage Control(UVC)
    2 levels
(3) Over Voltage Control(OVC)
    27.5V±0.5V
(4) Power Bus Distribution
    14 Lines
(5) Each Line Current Monitor
(6) 13 Lines ON/OFF Control with Power MOSFET Switches
(7) 13 Lines Current Limitation
(8) Charge/Discharge Control(2Batteries in Total):
    Height Rate Charge 750mA(1/20C)
    Trickle Charge 75mA(1/200C)
(9) Battery Reconditioning
(10) C/D Counter
(11) Battery Charge/Discharge Current Monitor
(12) Battery Voltage Monitor
(13) Boost-up converter rising up the Battery voltage
    24.5V±0.5V

6.4.2 Functions

The PCD is the key component the control the EPS operation centrally. The main functions of PCD are the primary bus power distribution and the BAT charge/discharge control.

The detailed functions of PCD are as follows.

(1) To distribute the unregulated primary bus power to each subsystem.
(2) To turn on/off PSU by command signals with the switches inserted in the bus line.
(3) To control the upper bus voltage limit by driving SHNT according th the bus voltage.
(4) To charge BAT at the controlled charge rate in sunlight.
(5) To provide the BAT stored power to each subsystem through the bus line.
(6) To control and manage the current/voltage/temperature/capacity of BAT to protect the stress or degradation of BAT.
(7) To monitor the bus current of each subsystem and separate a broken-down subsystem from the bus line with a power MOSFET switch.
(8) To avoid the LOCK-UP of SCP by converting the BAT voltage higher when the SCP output power is insufficient to get out from the LOCK-UP by SCP itself.

6.4.3 Operations

The PCD receives the SCP generated power and straightway distributes it to each subsystem in sunlight. A power on/off switch is inserted in each distributed bus line in PCD, and PSU is turned on/off with the switch driven by command signals.

The part of the SCP generated power is stored into BAT at the controlled charge rates. A C/D counter in PCD always monitors the capacity of BAT and switches the high charge rate to the trickle charge rate when the recharge quantity reaches the designated level according to the discharge quantity.

The BAT stored power is straightway provided to the bus line in eclipse. Thus, the bus voltage in eclipse remains unregulated.

In sunlight, PCD controls the upper bus voltage limit to prevent bad affects to load subsystems.

The bus voltage error amp. in PCD sends out to SHNT the amplified signal corresponding to the bus voltage. The SHNT dissipates the output current corresponding to this control signal and the SCP output voltage is controlled under the upper limit.

The PCD also monitors currents/voltages/temperatures of EPS components to manage the EPS operating status.

The PCD has the boost-up converter which converts the BAT voltage higher to avoid the SCP falling into ROCK-UP mode when the SCP output power is insufficient to get out the ROCK-UP mode by SCP itself

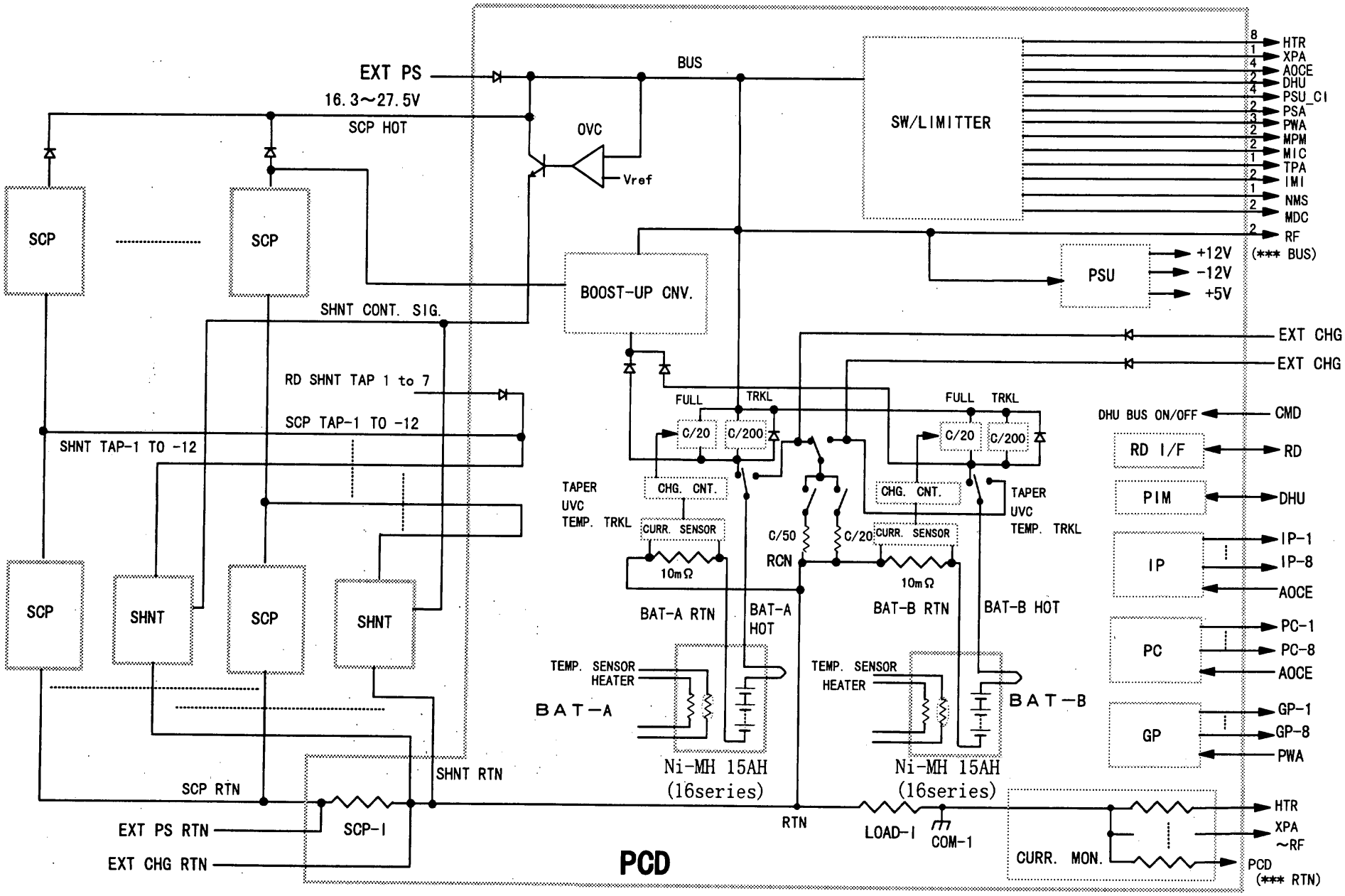

Figure 6.4-1 PLANET-B PCD Block Diagram

6.5 Power Supply Unit(PSU)

6.5.1 Overview

In PLANET-B, the distributed power conversion method is adopted. Thus, each subsystem has PUS respectively and each PSU produces the secondary voltages that the corresponding subsystem needs.

A standard type of small-sized, lightweight PSU is now being developed for PLANET-B to minimize the EPS weight.

There are 4 types of PSU corresponding to power and output voltages.

The main characteristics of PSU are as follows.

(1) Type

4 Type(PSU-1 ~ PSU-4)

(PSU-1 and PSU-2 have their variation of PSU-1-1,PSU-1-2,PSU-6 and PSU-2-1, PSU-2-2 respectively.)

(2) Output Power

PSU-1-1	20W
PSU-1-2	20W
PSU-6	9W
PSU-2-1	27W
PSU-2-2	35W
PSU-3	35W
PSU-4	103W

(3) Output Voltages

+5V,+12V,-12V,+15V,-15V,+29V

6.5.2 Function

Each PSU receives the unregulated primary bus voltage from PCD, and produces the regulated secondary voltages that the corresponding subsystem needs.

Each PSU must keep the secondary voltages within designated ranges under all operation modes of the corresponding subsystem.

Only one PSU for RF subsystem is installed straightway on the satellite structure, and each of the other PSU's is installed inside or outside the corresponding subsystem chassis.

6.5.3 Operation

A single-forward or push-pull type of switching regulator is used for PSU. Thus, PSU emits EMI noise as conducted emission and radiated emission. But this EMC between PSU and the other components is controlled by specifying and meeting the respective permitted level allocated to each PSU or component.

The PSU is turned on/off by the command control of a switch in PCD.

6.6 Shunt Dissipator(SHNT)

6.6.1 Overview

The SHNT consists of SHNT-1 and SHNT-2.

The SHNT-1 controls the 4 switch-transistors detecting the bus error voltage by itself. The SHNT-2 dissipates the SCP current according to the bus voltage error amp signal from the PCD. The SHNT-2 is the analog sequential shunt type to reduce the power dissipation.

The main characteristics of the SHNT are as follows.

(1) SHNT-1

SHNT type : Sequential switch shunt
SHNT stage : 4 stage
SHNT power : 135 W max. / 1 stage

(2) SHNT-2

SHNT type : analog sequential partial shunt
SHNT stage : 8 stage
SHNT POWER : 24 W max. / 1 stage

6.6.2 Function

The SHNT-1 dissipates the SCP current detecting bus error voltage.

The SHNT-2 dissipates the SCP current according to the signal from the PCD.

The SHNT-1 and the SHNT-2 keep the bus voltage under the upper limit, dissipating the SCP current.

SHNT-1 control range (nominal)

Stage1 on/off 27.4V / 26.4V
Stage2 on/off 27.5V / 26.5V
Stage3 on/off 27.6V / 26.6V
Stage4 on/off 27.7V / 26.7V

SHNT-2 control range

The bus voltage is controlled from 26.5V to 27.5V, dissipating the SCP current by SHNT-2.

The functional block of the SHNT-1, the SHNT-2 are shown in fig-6.6-1.

6.6.3 Mechanical Functions

The electrical devices of the SHNT-1 and the SHNT-2 are placed at Al-plates for the light weight.

The SHNT sizes are

SHNT-1 220 * 153 * 35 mm

Shnt-2 200 * 151.5 * 35 mm

The SHNT-1 and the SHNT-2 configuration are presented in fig-6.6-2.

(a) SHNT-2 Functional Block (b) SHNT-1 Functional Block

Fig-6.6-1 SHNT Functional Block

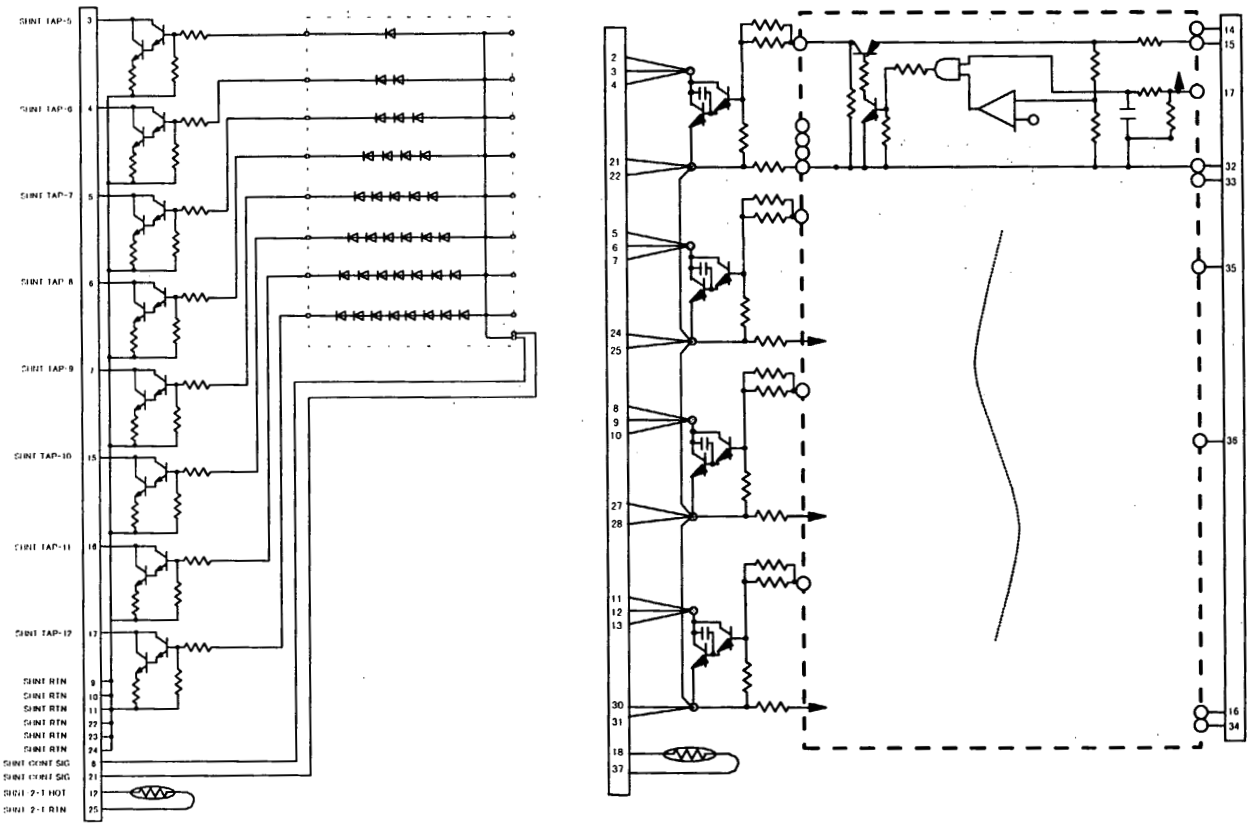

(a) SHNT-2 Functional Block (b) SHNT-1 Functional Block

Fig-6.6-1 SHNT Functional Block

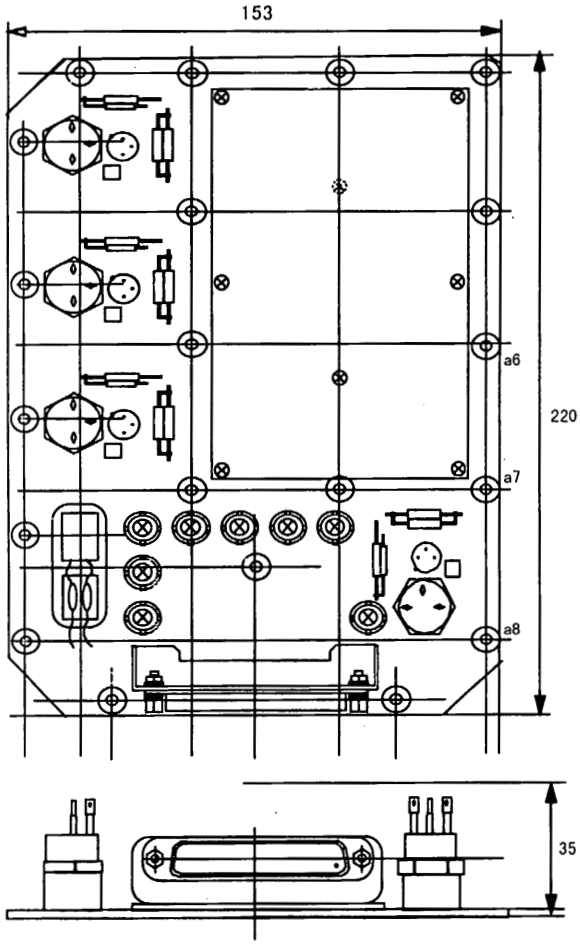

(a) SHNT-1 Configuration

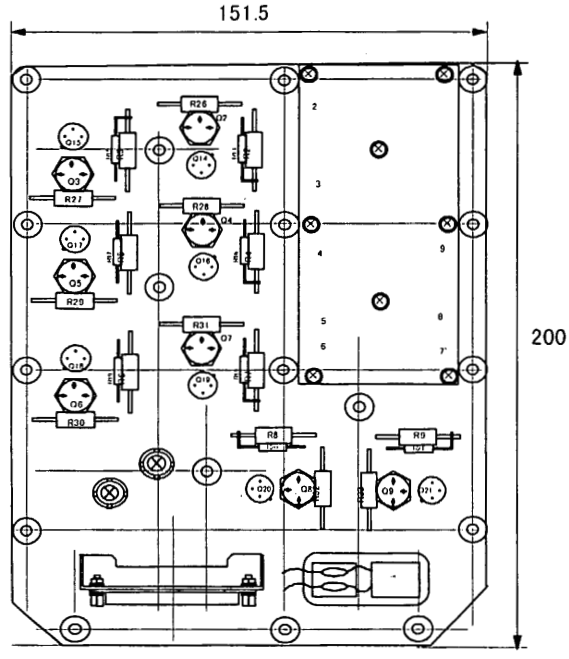

(b) SHNT-2 Configuration

Fig-6.6-2 SHNT Configuration

6.7 Command and Telemetry Items

Table 6.7-1 EPS Command List(1/3)

No.	COMMAND ITEM	FUNCTION
1	BT BC EXE	BAT BLOCK COMMAND EXECUTE
2	BTA K1 SET	BAT-A K1 SET ENABLE
3	BTA K2 SET	BAT-A K2 SET ENABLE
4	BTA C/D SET	BAT-A C/D COUNTER SET ENABLE
5	BTB C/D SET	BAT-B C/D COUNTER SET ENABLE
6	BTB K1 SET	BAT-B K1 SET ENABLE
7	BTB K2 SET	BAT-B K2 SET ENABLE
8	INT/EXT ENA	BAT INTERNAL/EXTERNAL COMANND ENABLE
9	INT/EXT DIS	BAT INTERNAL/EXTERNAL COMANND DISABLE
10	BTA UVC ENA	BAT-A UVC ENABLE
11	BTA UVC DIS	BAT-A UVC DISABLE
12	BTB UVC ENA	BAT-B UVC ENABLE
13	BTB UVC DIS	BAT-B UVC DISABLE
14	UVC HIST RST	UVC HISTORY RESET
15	SR REQ ENA	SR REQUEST ENABLE
16	SR REQ DIS	SR REQUEST DISABLE
17	BT UVC L1	BAT UVC LEVEL 1
18	BT UVC L2	BAT UVC LEVEL 2
19	BT TAPR L1	BAT TAPER LEVEL 1
20	BT TAPR L2	BAT TAPER LEVEL 2
21	BT RCN ON	BAT RECONDITIONING ON
22	BT RCN OFF	BAT RECONDITIONING OFF
23	HEATER ON	HEATER POWER ON
24	HEATER OFF	HEATER POWER OFF
25	BTA INT	BAT-A INTERNAL(ON)

Table 6.7-1 EPS Command List(2/3)

No.	COMMAND ITEM	FUNCTION
26	BTA EXT	BAT-A EXTERNAL(OFF)
27	BTA TCNT ENA	BAT-A TEMPERATURE TRICKLE ENABLE
28	BTA TCNT DIS	BAT-A TEMPERATURE TRICKLE DISABLE
29	XPA ON	XPA POWER ON
30	XPA OFF	XPA POWER OFF
31	AOCE ON	AOCE POWER ON
32	AOCE OFF	AOCE POWER OFF
33	BTB INT	BAT-B INTERNAL(ON)
34	BTB EXT	BAT-B EXTERNAL(OFF)
35	BTB TCNT ENA	BAT-B TEMPERATURE TRICKLE ENABLE
36	BTB TCNT DIS	BAT-B TEMPERATURE TRICKLE DISABALE
37	PSU_CI ON	PSU FOR COMMON INSTRUMENTS POWER ON
38	PSU_CI OFF	PSU FOR COMMON INSTRUMENTS POWER OFF
39	BOOST ENA	BOOST UP CONVERTER ENABLE
40	BOOST DIS	BOOST UP CONVERTER DSIABLE
41	CI ON/OF ENA	COMMON INSTRUMENTS POWER ON/OFF ENABLE
42	CI ON/OF DIS	COMMON INSTRUMENTS POWER ON/OFF DISABLE
43	PSA ON	PSA POWER ON
44	PSA OFF	PSA POWER OFF
45	PWA ON	PWA POWER ON
46	PWA OFF	PWA POWER OFF
47	BTA CHG ENA	BAT-A CHARGE ENABLE
48	BTA CHG DIS	BAT-A CHARGE DISABLE
49	MPM ON	MPM POWER ON
50	MPM OFF	MPM POWER OFF

Table 6.7-1 EPS Command List(3/3)

No.	COMMAND ITEM	FUNCTION
51	MIC ON	MIC POWER ON
52	MIC OFF	MIC POWER OFF
53	BTB CHG ENA	BAT-B CHARGE ENABLE
54	BTB CHG DIS	BAT-B CHARGE DISABLE
55	TPA ON	TPA POWER ON
56	TPA OFF	TPA POWER OFF
57	IMI ON	IMI POWER ON
58	IMI OFF	IMI POWER OFF
59	NMS ON	NMS POWER ON
60	NMS OFF	NMS POWER OFF
61	MDC ON	MDC POWER ON
62	MDC OFF	MDC POWER OFF

Table 6.7-2 EPS Telemetry List(1/4)

No.	TELEMETRY ITEM	FUNCTION
1	BAT-B K2 SET ENA/DIS	BAT-B K2 SET ENABLE/DISABLE
2	BAT-B K1 SET ENA/DIS	BAT-B K1 SET ENABLE/DISABLE
3	BAT-B C/D TRKL ON/OFF	BAT-B C/D TRICKLE ON/OFF
4	BAT-A C/D TRKL ON/OFF	BAT-B D/C TRICKLE ON/OFF
5	BAT-B C/D SET ENA/DIS	BAT-B C/D COUNTER SET ENABLE/DISABLE
6	BAT-A C/D SET ENA/DIS	BAT-A C/D COUNTER SET ENABLE/DISABLE
7	BAT-A K2 SET ENA/DIS	BAT-A K2 SET ENABLE/DISABLE
8	BAT-A K1 SET ENA/DIS	BAT-A K1 SET ENABLE/DISABLE
9	BAT INT/EXT ENA/DIS	BAT INTERNEL/EXTERNAL ENABLE/DISABLE
10	CI ON/OFF ENA/DIS	COMMON INSTRUMENTS POWER ON ENABLE/ DISABLE
11	SR REQ ENA/DIS	SR REQUEST ENABLE/DISABLE
12	SR REQ ON/OFF	SR REQUEST ON/OFF
13	UVC REQ ON/OFF	UVC REQUEST ON/OFF
14	BAT UVC HISTORY	BAT UVC HISTORY WAS/NOT
15	BAT-B UVC ENA/DIS	BAT-B UVC ENABLE/DISABLE
16	BAT-A UVC ENA/DIS	BAT-A UVC ENABLE/DISABLE
17	BOOST ENA/DIS	BOOST UP CONVERTER ENABLE/DISABLE
18	BOOST ON/OFF	BOOST UP CONVERTER ON/OFF
19	BAT RCN ON/OFF	BAT RECONDITIONING ON/OFF
20	BAT TAPR LEVEL	BAT TAPER LEVEL 1/2
21	BAT UVC LEVEL	BAT UVC LEVEL 1/2
22	BAT-B TEMP-TRKL ON/OFF	BAT-B TEMPERATURE TRICKLE ON/OFF
23	BAT-B CHG FULL/TRKL	BAT-B CHARGE FULL/TRICKLE
24	BAT-B TEMP-CNT ENA/DIS	BAT-B TEMPERATURE TRICKLE ENABLE/DISABLE
25	BAT-B INT/EXT	BAT-B INTERNAL/EXTERNAL

Table 6.7-2 EPS Telemetry List(2/4)

No.	TELEMETRY ITEM	FUNCTION
26	BAT-A TEMP-TRKL ON/OFF	BAT-A TEMPERATURE TRICKLE ON/OFF
27	AT-A CHG FULL/TRKL	BAT-A CHARGE FULL/TRICKLE
28	BAT-A TEMP-CNT ENA/DIS	BAT-A TEMPERATURE TRICKLE ENABLE/DISABLE
29	BAT-A INT/EXT	BAT-A INTERNAL/EXTERNAL
30	HEATER BUS ON/OFF	HEATER POWER ON/OFF
31	XPA BUS ON/OFF	XPA POWER ON/OFF
32	AOCE BUS ON/OFF	AOCE POWER ON/OFF
33	DHU BUS ON/OFF	DHU POWER ON/OFF
34	PSU_CI BUS ON/OFF	PSU FOR COMMON INSTRUMENTS POWER ON/OFF
35	PSA BUS ON/OFF	PSA POWER ON/OFF
36	PWA BUS ON/OFF	PWA POWER ON/OFF
37	MPM BUS ON/OFF	MPM POWER ON/OFF
38	MIC BUS ON/OFF	MIC POWER ON/OFF
39	TPA BUS ON/OFF	TPA POWER ON/OFF
40	IMI BUS ON/OFF	IMI POWER ON/OFF
41	NMS BUS ON/OFF	NMS POWER ON/OFF
42	MDC BUS ON/OFF	MDC POWER ON/OFF
43	BAT-A CHG ENA/DIS	BAT-A CHARGE ENABLE/DISABLE
44	BAT-B CHG ENA/DIS	BAT-B CHARGE ENABLE/DISABLE
45	BAT-A K1	BAT-A K1 DATA
46	BAT-A K2	BAT-A K2 DATA
47	BAT-B K1	BAT-B K1 DATA
48	BAT-B K2	BAT-B K2 DATA
49	BAT-A C/D COUNT	BAT-A C/D COUNTER DATA
50	BAT-B C/D COUNT	BAT0B C/D COUNTER DATA

Table 6.7-2 EPS Telemetry List(3/4)

No.	TELEMETRY ITEM	FUNCTION
51	BAT-A C-EOD	BAT-A C/D COUNTER DATA AT THE END OF DISCHARGE
52	BAT-B C-EOD	BAT-B C/D COUNTER DATA AT THE END OF DISCHARGE
53	SCP-I	SCP CURRENT
54	LOAD-I	LOAD CURRENT
55	BATA-I	BAT-A CURRENT
56	BATB-I	BAT0B CURRENT
57	HTR-I	HEATER CURRENT
58	RF-I	RF SUBSYSTEM CURRENT
59	XPA-I	XPA CURRENT
60	AOCE-I	AOCE CURRENT
61	DHU-I	DHU CURRENT
62	PSU_CI-I	PSU FOR COMMON INSTRUMENTS CURRENT
63	PSA-I	PSA CURRENT
64	PWA-I	PWA CURRENT
65	MPM-I	MPM CURRENT
66	MIC-I	MIC CURRENT
67	TPA-I	TPA CURRENT
68	IMI-I	IMI CURRENT
69	NMS-I	NMS CURRENT
70	MDC-I	MDC CURRENT
71	PCD-I	PCD CURRENT
72	BUS-V	BUS VOLTAGE
73	BATA-V	BAT-A VOLTAGE

Table 6.7-2 EPS Telemetry List(4/4)

No.	TELEMETRY ITEM	FUNCTION
74	BATB-V	BAT-B VOLTAGE
75	PCD+5V	PCD +5V VOLTAGE
76	PCD+12V	PCD +12V VOLTAGE
77	PCD-12V	PCD -12V VOLTAGE

7. Structure

J.Onoda and K.Minesugi(ISAS)
NEC Corporation

7.1 Overview

The design of PLANET-B structure provides a light weight structure consistent with high reliability for the critical environments and loading conditions. The structure also provides an adequate mounting surface for all equipments and thermal control surfaces to regulate temperetures.

The PLANET-B structural configuration meets installation requirements of all components such as the High Gain Antenna (HGA), the RCS tanks, the extensible mast, the wire antennas , and other subsystems during all phase of the mission.

7.2 Spacecraft Configuration

The PLANET-B configuration is shown in Figure 7-1. The spacecraft structure consists of upper panel, 8 side panels, base panel and 16 struts. The HGA is mounted on the upper panel. The four RCS tanks are suppourted by base panel and 16 struts. Two solar array paddles are installed on outside of the side panels.

The length from the top of Low Gain Antenna (LGA-A) to spacecraft separation plane is 1929mm, and the length from spacecraft separation plane to nozzle end of 500N thruster is 472mm. Overall spacecraft height is 2451mm. Overall size and envelope are compatible with the M-V rocket interface.

The spacecraft component locations are shown in Figure 7-2.

7.3 Design Criteria

7.3.1 System Environmental Condition

(1) Quasi-Static Load

The quasi-static load factors are shown in Table 7-1.

(2) Random Vibration

The random vibration levels are shown in Table 7-2 and Figure 7-3.

(3) Shock

Thrust axis : 15G 10msec half sine wave

Lateral axis : 5G 10msec half sine wave

(4) Acoustic

The acoustic levels are shown in Table 7-3.

(5) Spin

60 ± 6 rpm

(6) Separation Spring force

85 ± 9kgf/one spring × 8 springs

7.3.2 Strength

The structure shall be designed to withstand the limit loads without yielding and to withstand the ultimate loads without failure or buckling.

Margin of safety(M.S) is calculated by following equations.

M.S=Material Yielding ／ Stress at Limit load − 1 ＞ 0

M.S=Material Strength ／ Stress at Ultimate load − 1 ＞ 0

or

= Backling ／ Stress at Ultimate load − 1 ＞ 0

(Ultimate load=1.25 × Limit load)

7.3.3 Stiffness Requirements

The PLANET-B system shall have a minimum natural frequency of 15Hz in any lateral directions and 15Hz in the thrust direction when PLANET-B is hard-mounted at the spacecraft separation plane.

7.4 Primary Structure

The PLANET-B primary structure is shown in Figure 7-4. The primary structure consists of upper panel, base panel, 8 side panels and truss construction assembled by 16 struts.

7.4.1 Upper Panel

The upper panel provides the mounting sureface of HGA, Nutation Damper (ND), Two Dimensional Sun Aspect Sensor (TSAS) and solar array paddle hinges. The upper panel is installed to each top of side panels. This panel is a composite structure of a aluminum honeycomb core bonded to CFRP facesheet.

7.4.2 Side Panel

Eight side panels provide the primary attachment and radiation surfaces for the components. The side panels are composite structures of a aluminum honeycomb core bonded to aluminum or CFRP facesheets. The side panel #3 and #7 have aluminum facesheets, and the others have CFRP facesheets. The side panels support the upper panel

and are installed to a base panel and other side panels. Threaded inserts are mounted into the side panels to install the components .

7.4.3 Base Panel

The base panel provides the mounting sureface of RCS such as four fuel tank modules, two thruster modules, three valve modules and pipes that these components are connected to each other by and several components. The base panel is a composite structure of a aluminum honeycomb core bonded to CFRP facesheets. Threaded inserts are mounted into the base panel to install the components. This panel is supported by the truss construction assembled by 16 struts.

7.4.4 Truss Construction

Truss construction consists of 16 struts which are CFRP cylindrical tube and the end fittings. These 16 struts are grouped into sets of four struts each. The struts in each set supports the base panel at four points around each fuel tank, and they join together at the M-V rocket interface. Then, the spacecraft is supported at four points on the interface. The truss construction provides the direct load path between the base panel and the M-V rocket interface points.

7.5 Mechanical Integration Parts

7.5.1 Overview

Mechanical integration parts include the mounting brackets of instruments, fasteners and the balance weights.

7.5.2 Components

(1) The mounting brackets and fasteners

The mounting brackets are used to install the instruments at the required position or direction. Fasteners are using for mounting all components on spacecraft structure. The instrument SSC,SSAS,LGA-B,XUV-S and ACM needs the mounting brackets.

(2) The balance weights

The balance weights which are made of brass or tungsten plate are installed on the spacecraft structure to adjust the spacecraft mass balance.

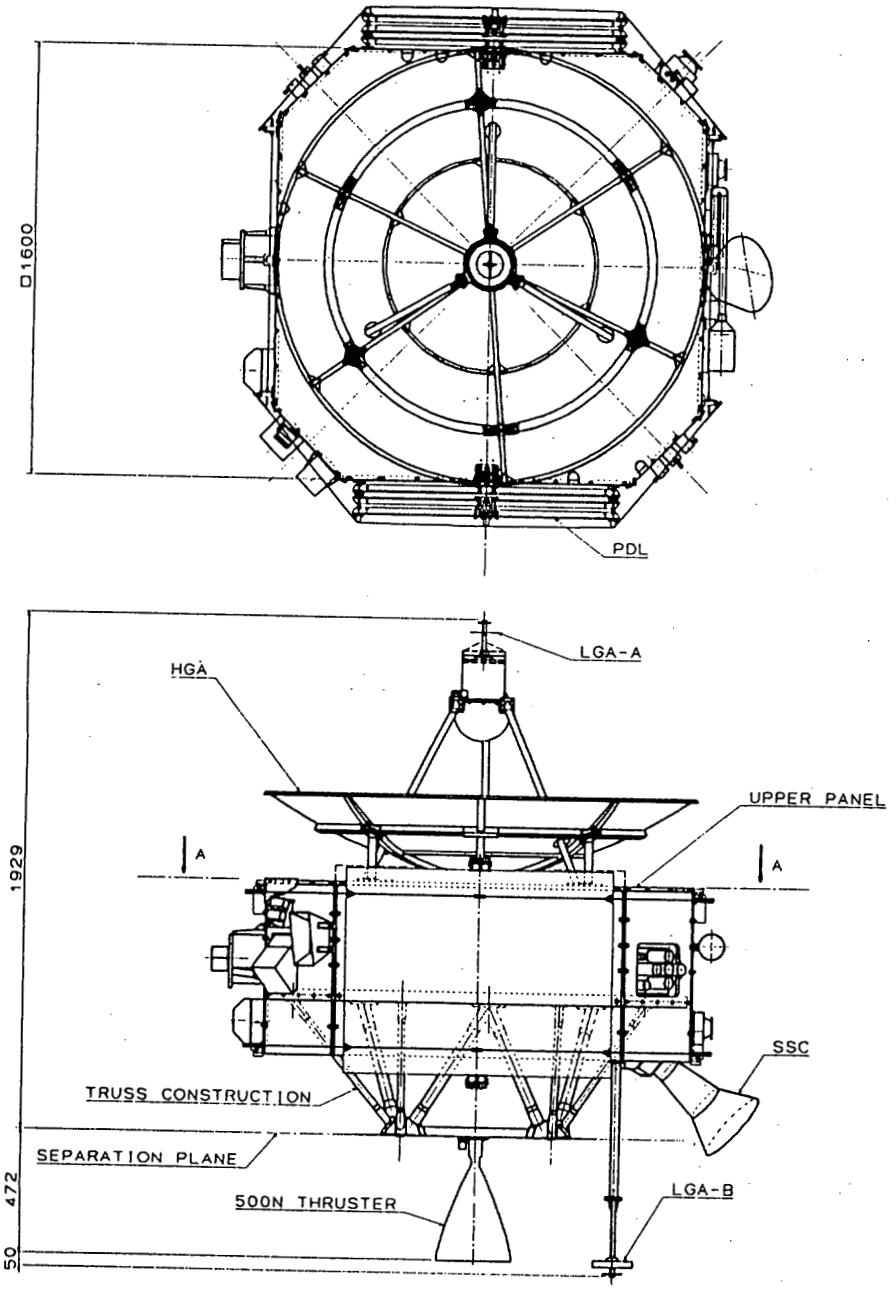

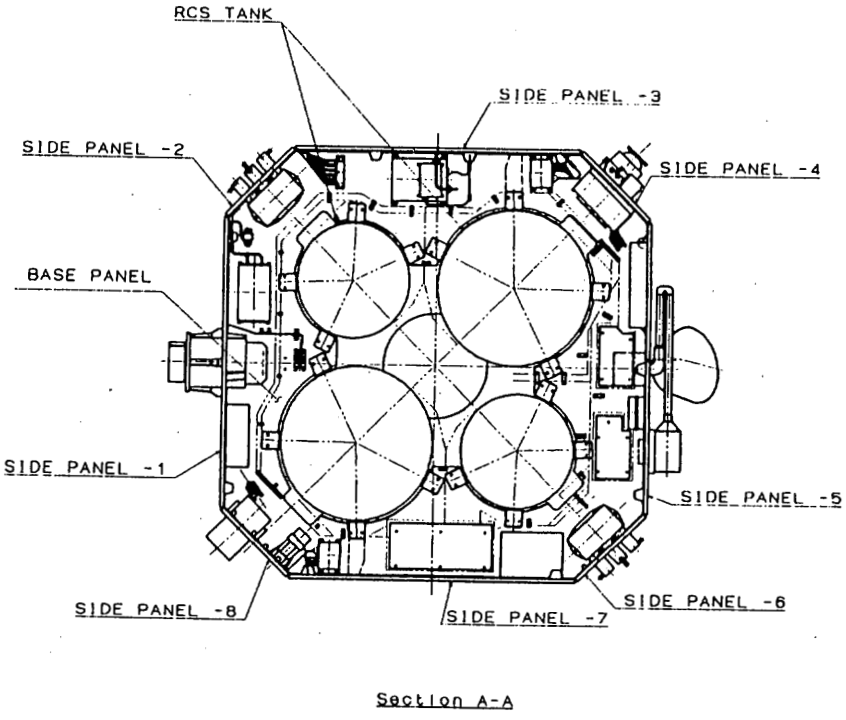

Figure 7-1 PLANET-B Configuration

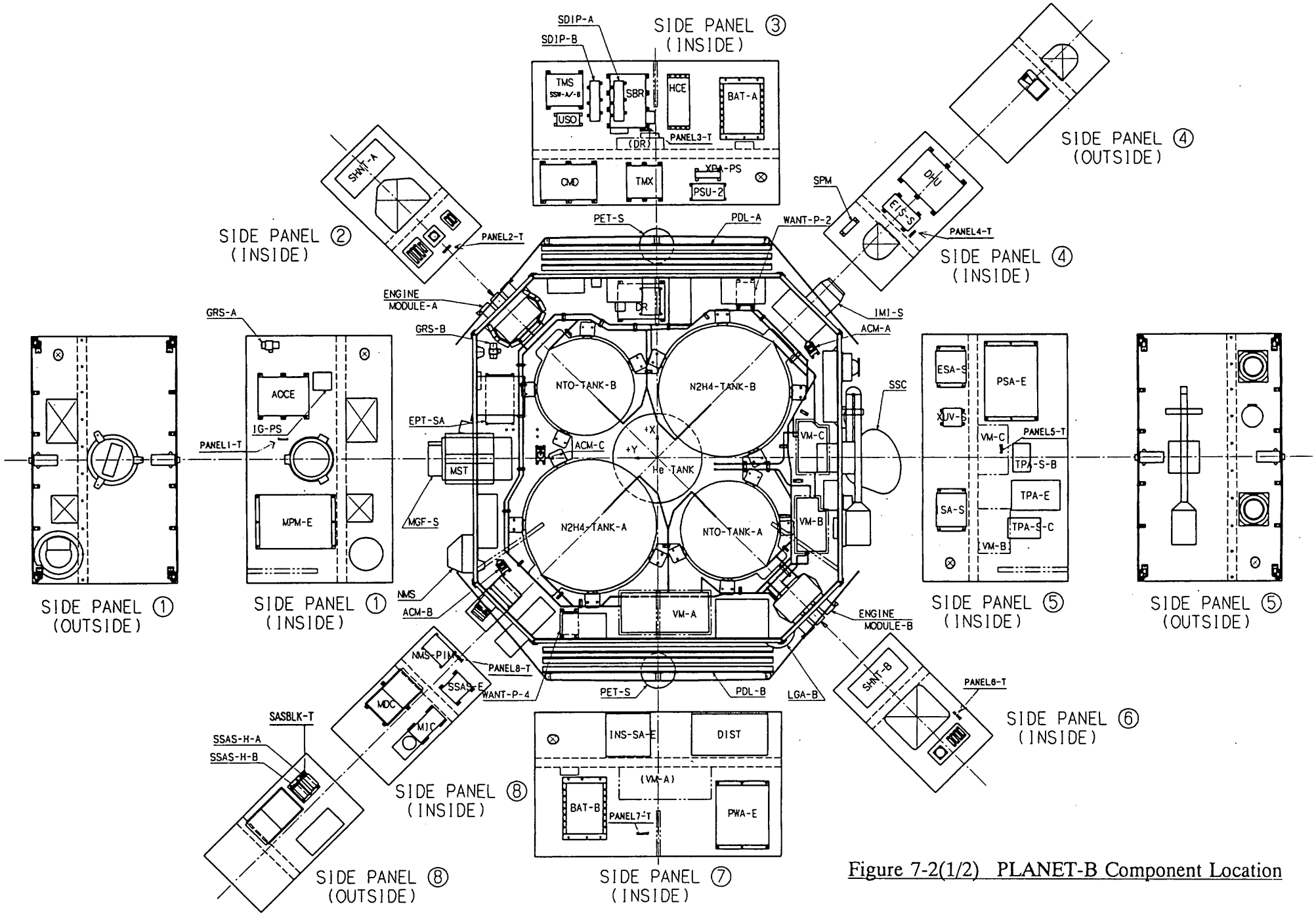

Figure 7-2(1/2) PLANET-B Component Location

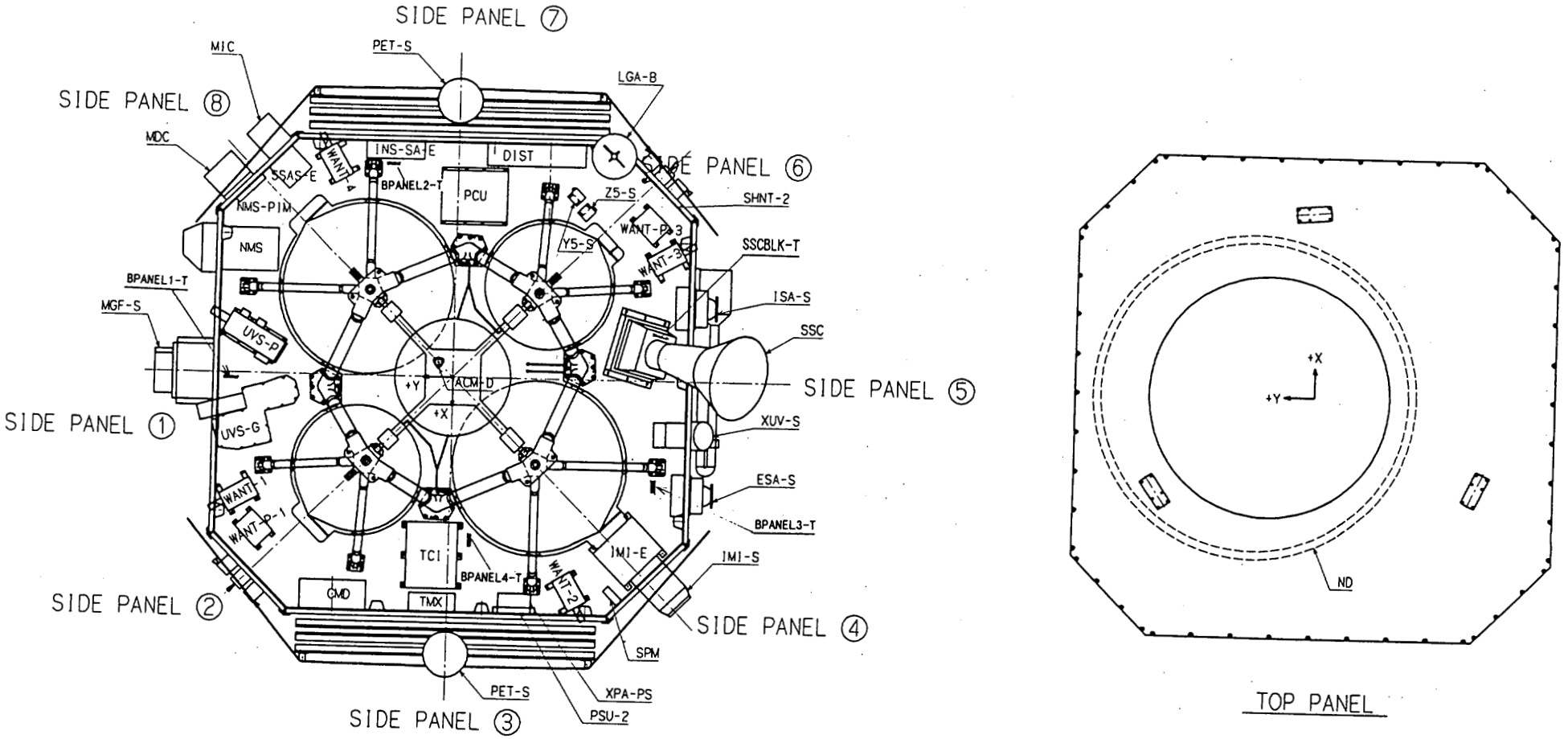

Figure 7-2(2/2) PLANET-B Component Location

Table 7-1 Quasi-Static Load Factors (Limit Load)

EVENT	THRUSY AXIS	LATERAL AXIS
1st motor fire	+5.0G	+9.8G
2nd motor fire	+6.0G	+2.0G
3rd motor fire	+10.0G	–
4th motor fire	+11.3G	–

NOTE : + COMPRESSION

Table 7-2 Landom Vibration Level (QT)

Thrust Axis (5.4Grms)	
frequency (Hz)	PSD
20~ 40	0.08 G^2/Hz
40~ 80	-12.0 dB/oct
80~ 364	0.005 G^2/Hz
364~ 400	11.6 dB/oct
400	0.0072 G^2/Hz
400~ 1130	4.4 dB/oct
1130	0.033 G^2/Hz
1130~ 1700	-11.4 dB/oct
1700~ 2000	0.007 G^2/Hz

Lateral Axis (6.8Grms)	
frequency (Hz)	PSD
20	0.02 G^2/Hz
20~ 40	-6.0 dB/oct
40~ 195	0.005 G^2/Hz
195~ 450	6.1 dB/oct
450	0.027 G^2/Hz
450~ 850	2.6 dB/oct
850~ 1200	0.047 G^2/Hz
1200~ 1650	-21.2 dB/oct
1650~ 2000	0.005 G^2/Hz

Duratios : 45 seconds

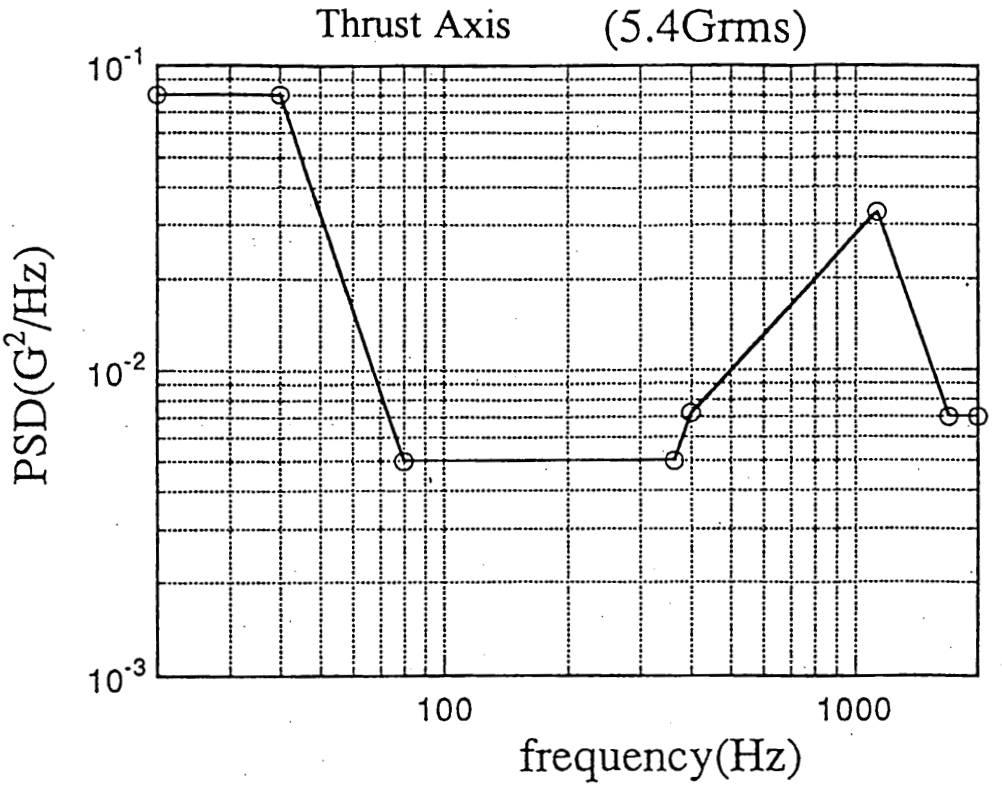

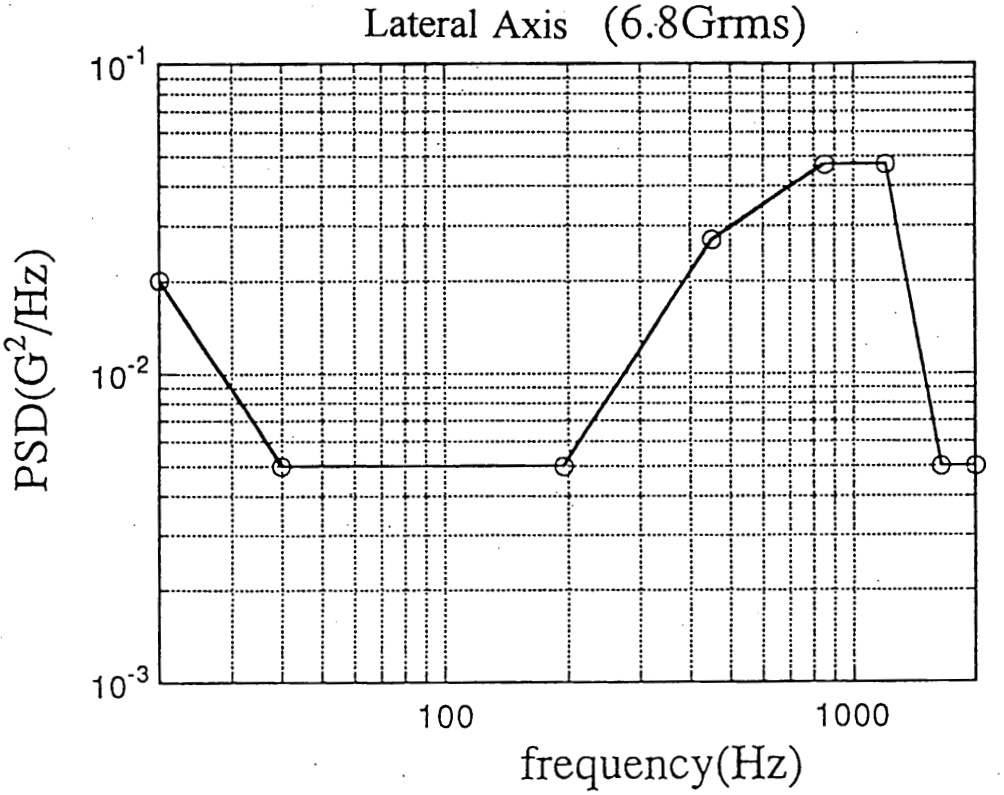

Figure 7-3 Landom Vibration level (QT)

Table 7-3 Acoustic Level (QT)

1/1 OCT Center Frequency (Hz)	Sound Pressure Level (dB)
31.5	136.5
63	135.5
125	143.0
250	143.0
500	142.0
1000	139.5
2000	134.0
4000	130.5
8000	124.5
Overall	148.8
0dB=2×10^{-5}Pa	Duration : 45 seconds

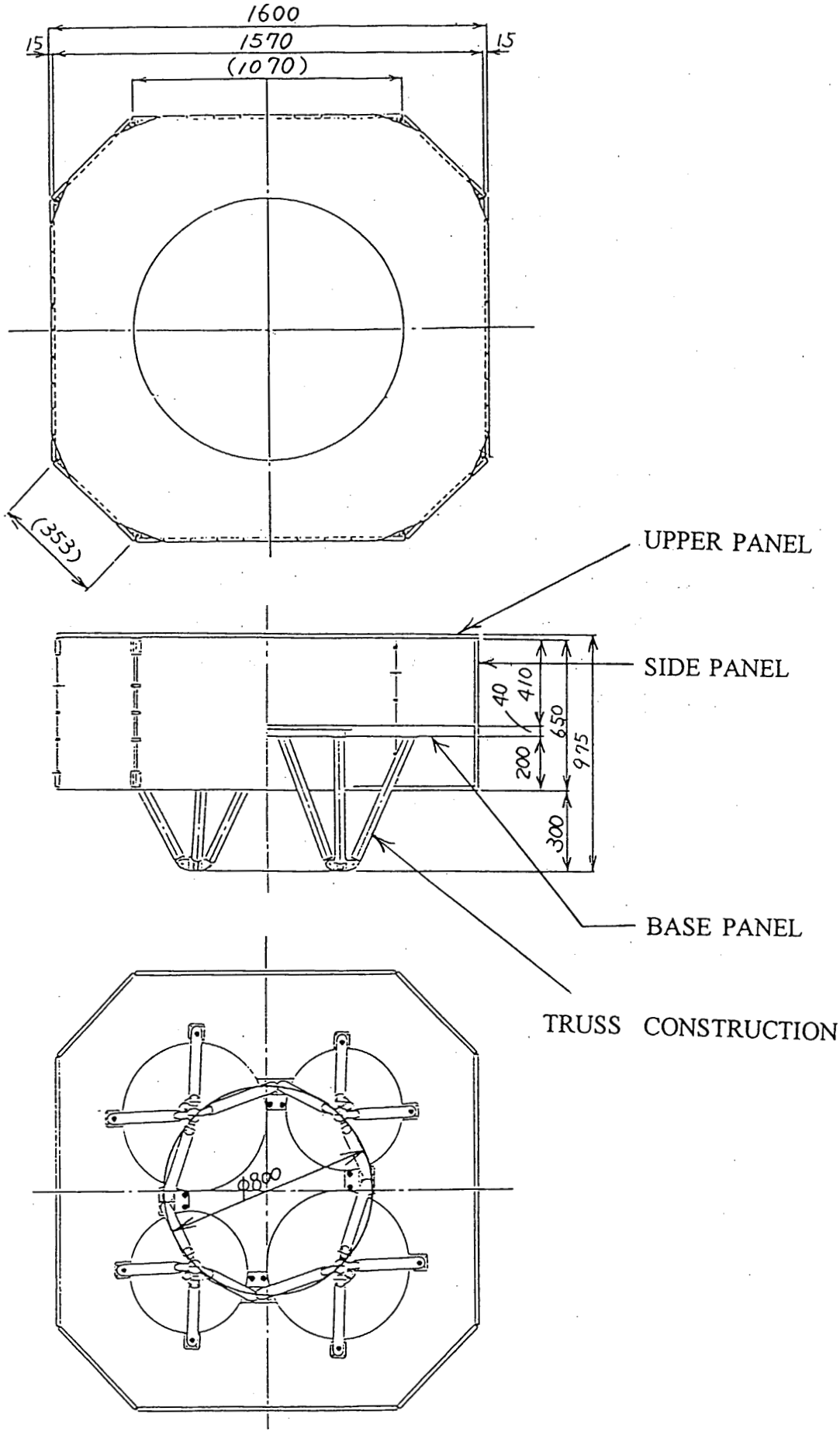

Figure 7-4 PLANET-B Primary Structure

7.6 Structural Analysis

7.6.1 Dynamic Analysis

A dynamic analysis was performed to analyze elastic vibration modes, their frequencies and structural load, to confirm that the dynamic characteristics of spacecraft meet the M-V rocket interface requirment, and to establish mechanical environmental conditions of all components. A finite elmemt model of the spacecraft was constructed by using the NASTRAN computer program.

The typical mode shapes of PLANET-B are shown in Figure 7-5.

7.6.2 Stress Analysis

A stress analysis was performed to analyze the force distribution in spacecraft structure and the load balance for each structural elements, and to confirm that the each elements have strength fully for the load. These analyses were performed by using the NASTRAN computer program with the same model as that for dynamic analysis.

As the result of stress analysis, the minimum margin of safety(M.S) in the primary structure was 0.1.

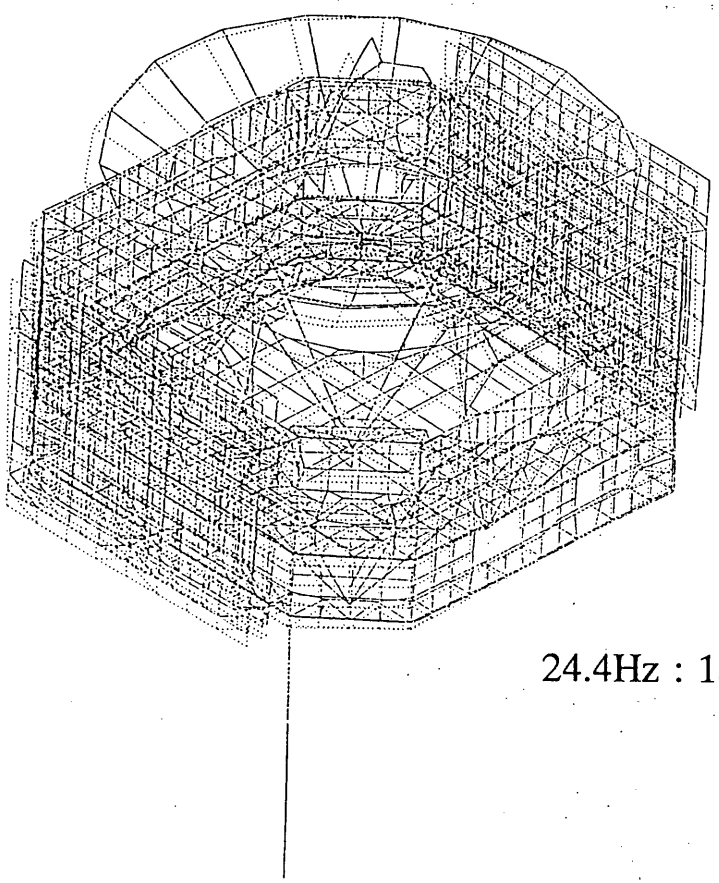

24.4Hz : 1st bending X

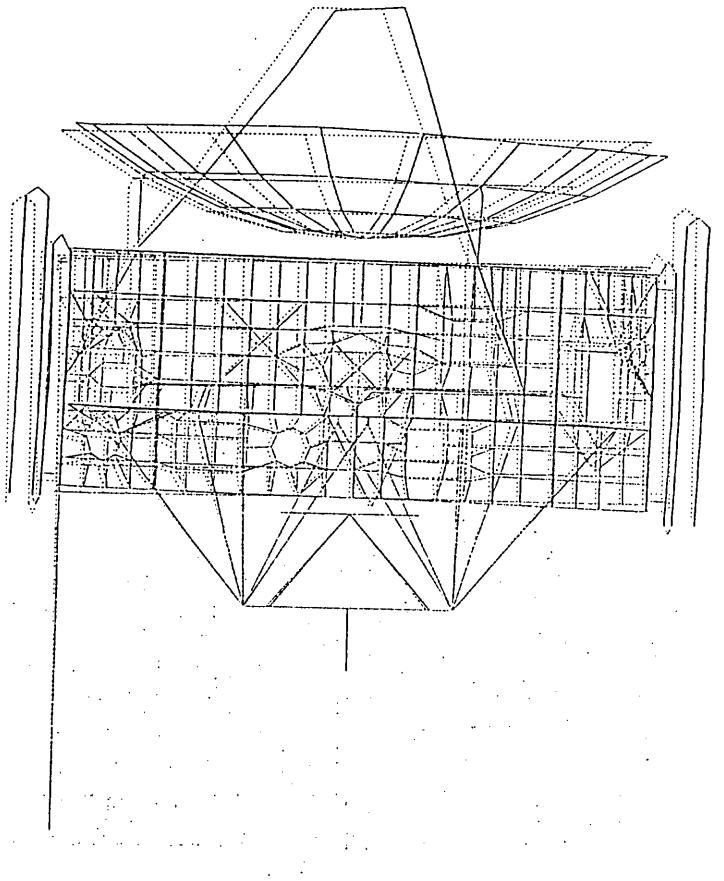

Figure 7-5 Modes Description(1/4)

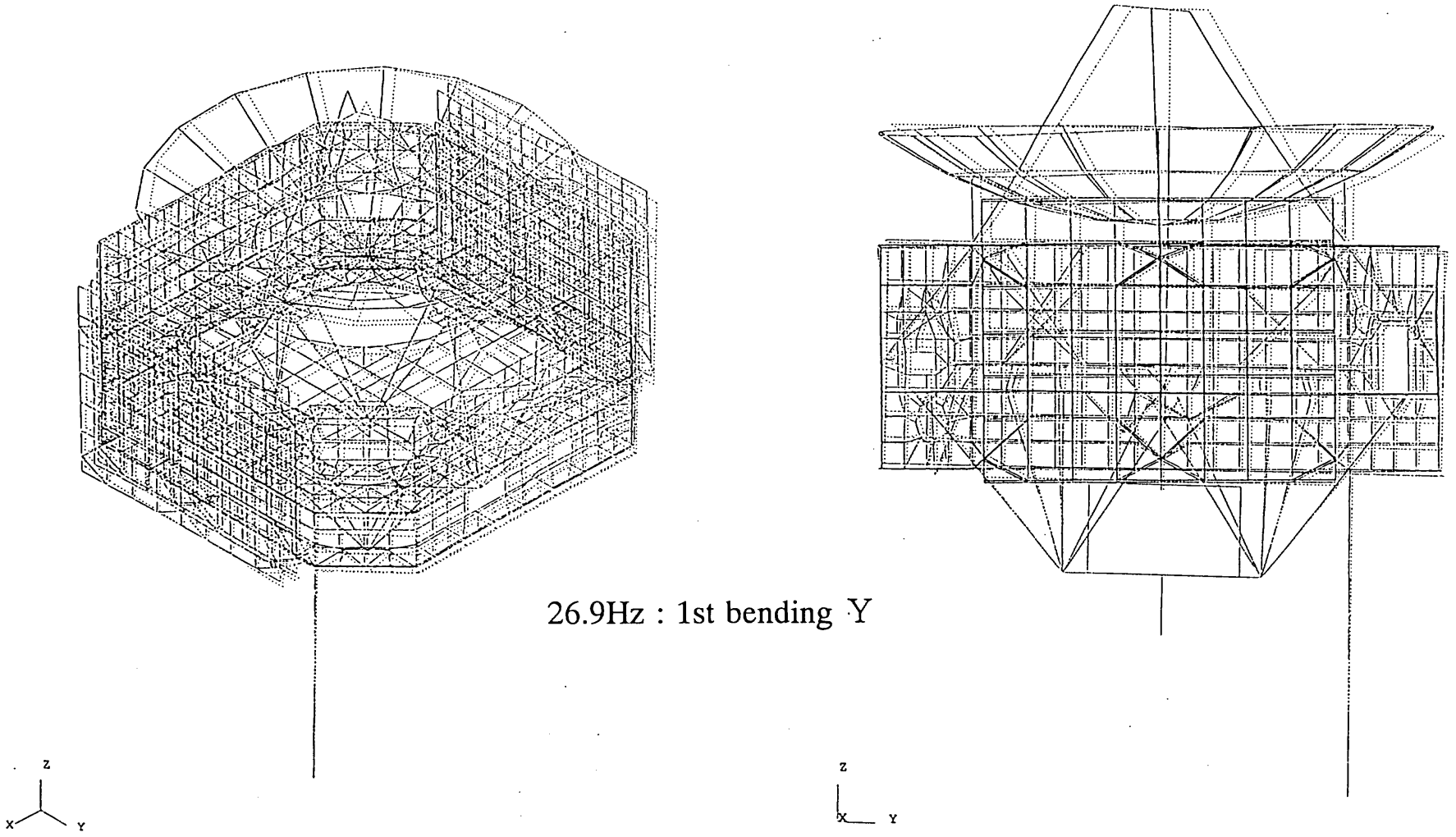

26.9Hz : 1st bending Y

Figure 7-5 Modes Description(2/4)

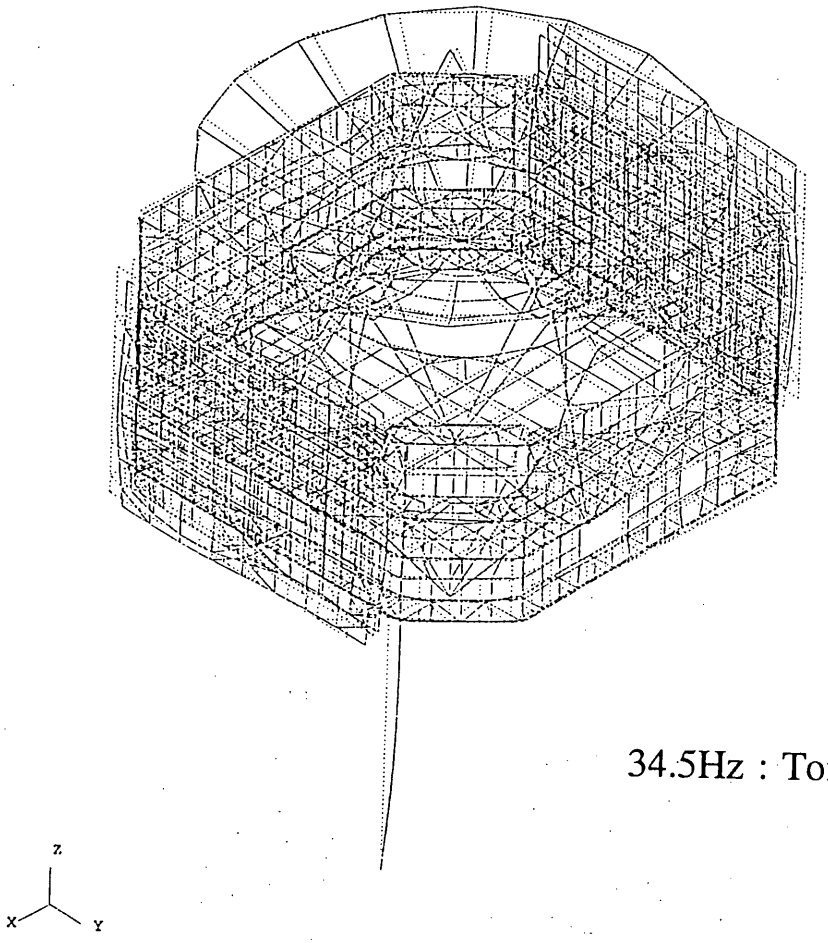

34.5Hz : Torsion

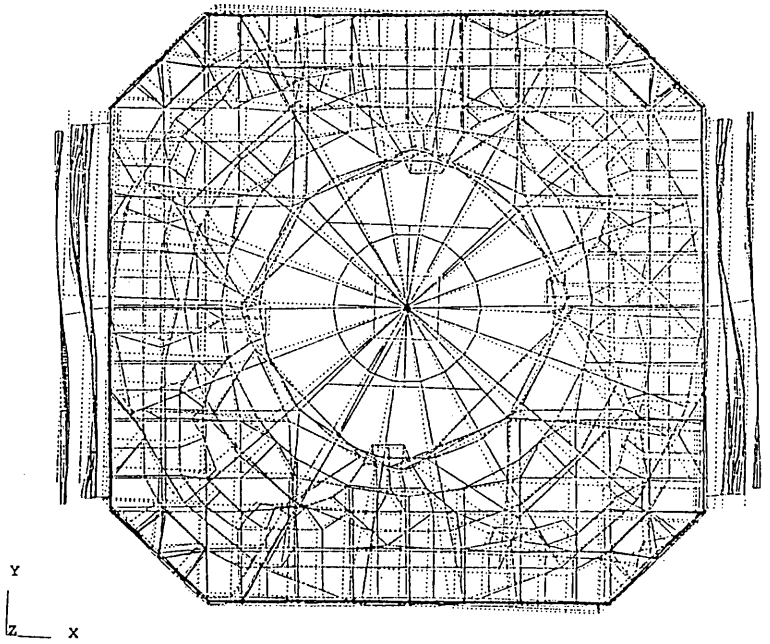

Figure 7-5 Modes Description(3/4)

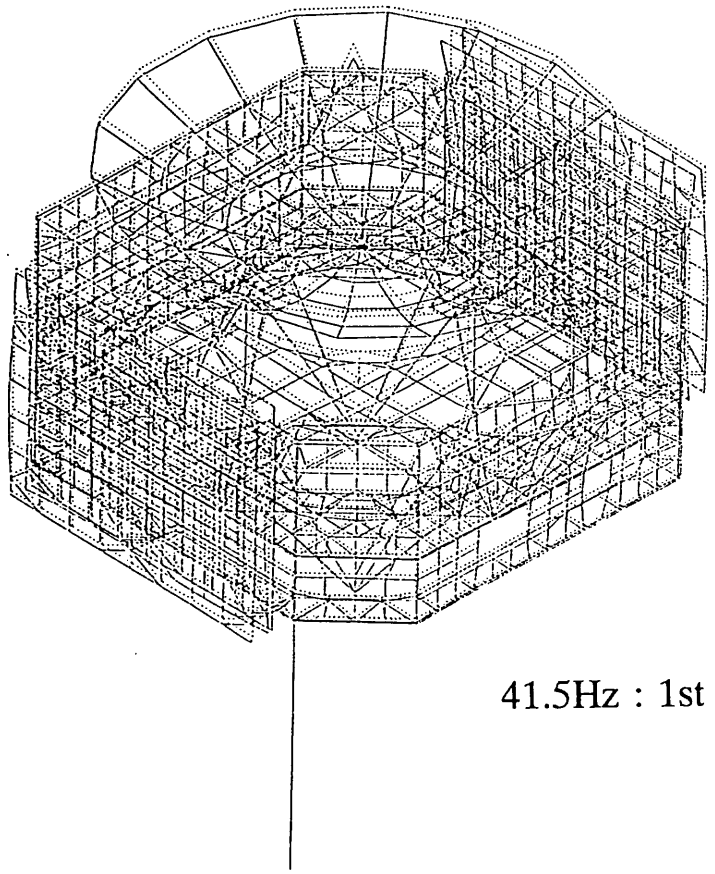

41.5Hz : 1st longitudinal Z

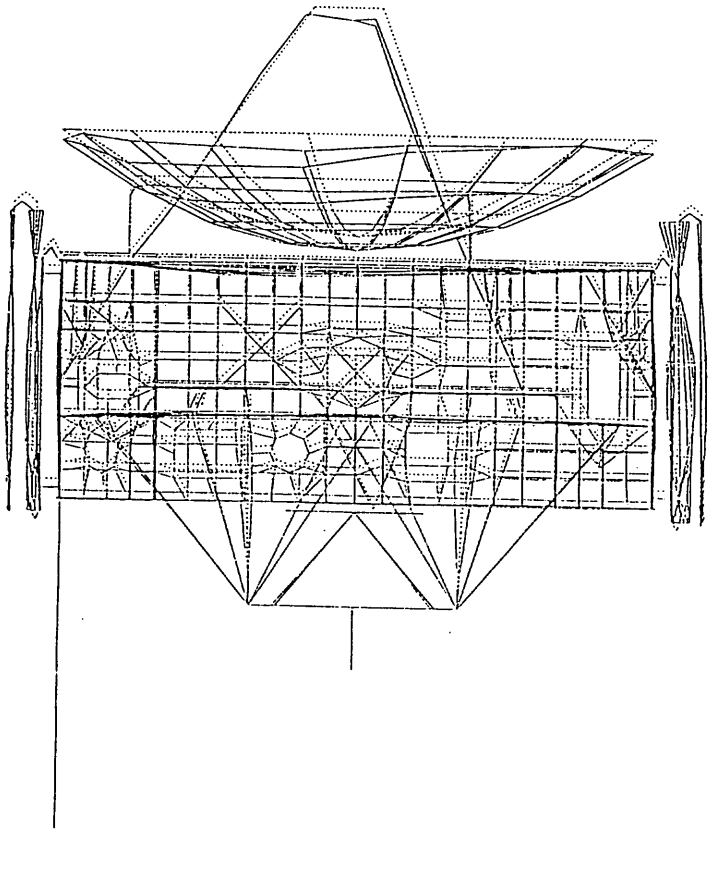

Figure 7-5 Modes Description(4/4)

8. Thermal Design and Control

Y. Kobayashi and A. Ohnishi (ISAS)
NEC Corporation

8.1 Overview

This section describes the thermal design of PLANET-B. The Thermal Control Subsystem (TCS) is required to maintain the onboard equipment and the main structure in proper temperature range during their entire mission life. The thermal control of the spacecraft is basically achieved by the light weight passive means without thermal louvers unlike many other interplanetary spacecraft. Detailed thermal design of components is described individually in the each subsystem section.

8.2 Design Requirements

The thermal design requirements are summarized in Table 8-1.

8.3 Thermal Design

The PLANET-B thermal control is achieved by the combined method of passive and active thermal control. The thermal design concept of the PLANET-B is shown in Figure 8-1. The passive control means are radiator, MultiLayer Insulation blanket (MLI), paint, thermal insulator, thermal filler and thermal doublers. The active control means are automatically controlled heaters for the propulsion subsystem, battery and SSC.

Table 8-1 Thermal Design Requirements

ITEMS	REQUIREMENTS
Launch	·Launch Window ; Summer in 1998 ·Launch Vehicle ; M-V Rocket 2nd Flight
Mission Life	·Total 3.2 Years ------ (1) Parking Phase ; 4 months (2) Cruising Phase ; 10 months (3) Planet Mars Phase ; 2 years
Orbit(*1)	(1)Parking Phase ·After 1st Swing-by ; 7,000km(Hp) × 400,000km(Ha) ·Before 2nd Swing-by ; 7,000km(Hp) × 1,500,000km(Ha) ·Duration of Eclipse ; 19 min. (Max.) (2)Cruising Phase ·Solar Pointing (for about 40 days after injection) ·Earth Pointing (40 days after injection to Mars arrival) ·No Eclipse (3)Planet Mars Phase ·150km(Hp) × 15Rm(Ha) (Rm=3547km) ·Max. Eclipse Period ; 65 min.
Attitude Control	·Spin Rate ; 7.5rpm ·Sun angle (with respect to Spin Axis); (1)0 to 56deg. (2)0 to 10deg. (3)0 to 45deg.
Internal heat dissipation (*2)	·Min ;Approx. 110W(STAND-BY mode) (in Mars orbit) ·Max ;Approx. 280W(REC mode) (in Mars orbit)
Components Temperature Ranges Operating within specification	·PSA-E,ESA-E,EIS-E,XUV-E ; -30 to 45 ℃ ·PWA-E ; -20 to 50 ℃ ·MIC ; -20 to 45 ℃ ·IMI-E ; -15 to 50 ℃ ·IMI-S ; -15 to 20 ℃ ·BAT ; 5 to 15 ℃ ·SSC ; -30 to 20 ℃ ·HCE ; -20 to 50 ℃ ·SI and CI components except for the above components allow -30 to 50 ℃.
Surface Conductivity	All external surface is required electrical conductivity to system ground. (Surface resistivity < 10^6 Ω / □)

Notes:

*1: Hp = Perigee Altitude , Ha = Apogee Altitude, Rm=Mars radius

*2: The dissipation does not include battery.

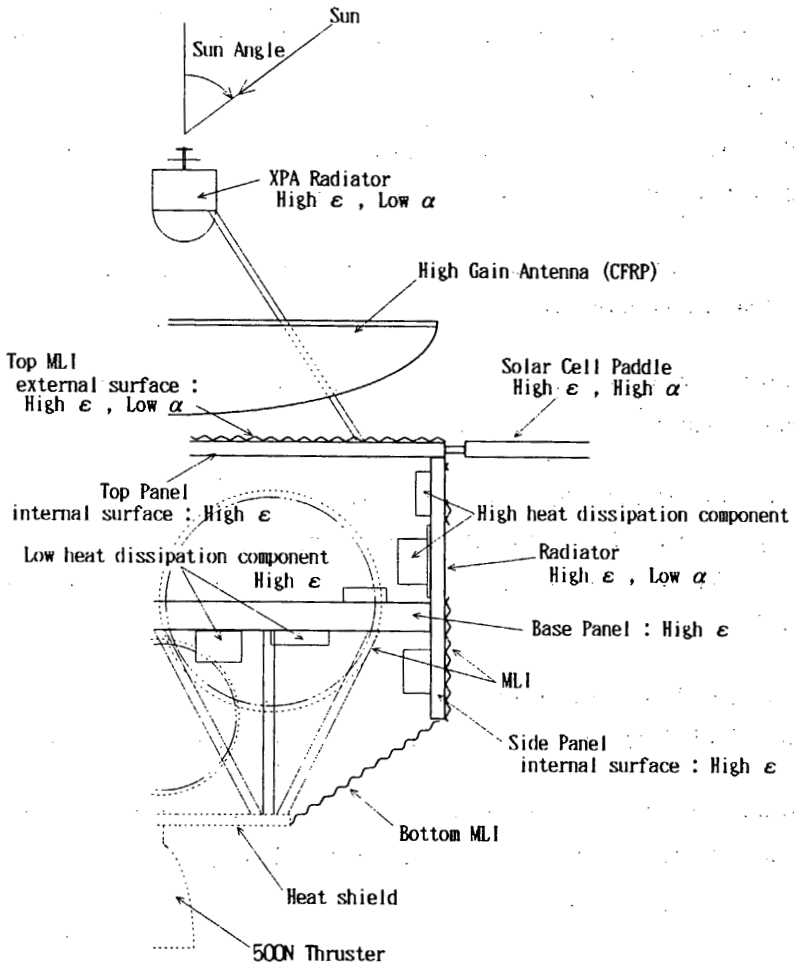

Figure 8-1 Thermal Design Concept of the PLANET-B

8.3.1 Thermal Design of the Spacecraft Structure and Components

Figure 8-2 shows the thermal design concept of the main structure and components. Thermal design of the main structure and components is simple and basically achieved by the passive means augmented with minimum heaters.

(1) The inner surface of aluminum skin panel is painted with high emissivity black to equalize the spacecraft internal temperature.

(2) The external surfaces of spacecraft is covered with MLI to isolate the spacecraft from the external thermal environment.

(3) The side panel radiators are covered with the conductive second surface mirror film(0.125 mm thick ITO coated vacuum deposited silver Teflon film).

(4) CI and SI's electrical boxes are basically black anodized to have high emissivity since the black anodizing is lighter than black paint.

(5) Some high dissipation components are installed on the panel with the thermal filler for the effective thermal rejection.

(6) AOCE and MIC-E, those have high heat flux more than $0.1W/cm^2$, are installed on the CFRP skinned side panels with 0.96 mm thick CFRP thermal doubler for the effective heat spreading over the radiators. This light weight CFRP thermal doubler is made of KC13CU2/RS-3 high heat conductive CFRP.

(7) The back side of SCP, which has not direct solar input, is covered with the conductive second surface mirror film(ITO-coated 0.075 mm thick vacuum deposited silver PEI film).

(8) SI are required to have thermal isolation between its electronics box and its exposed sensor head to minimize the heat leak from the interior spacecraft to deep space.

8.3.2 HGA

Figure 8-3 shows the HGA configuration and its thermal design concept.

(1) TWF-CFRP reflector has very low thermal deformation because its Coefficient of Thermal Expansion (CTE) is order of 1×10^{-7} / ℃. This value is less than that of the conventional CFRP honeycomb panels. This extremely low CTE requires virtually no thermal control for the reflector.

(2) The XPA is installed on the feed above the HGA reflector. The XPA have a cylindrical radiator with the conductive second surface mirror film(ITO-coated 0.075 mm thick vacuum deposited silver PEI film).

(3) The redome covering the feed horn is made of GFRP. Its outer surface is Ge deposited for surface conductivity. Its inner surface is painted white to avoid high temperature caused by the focusing of the solar ray.

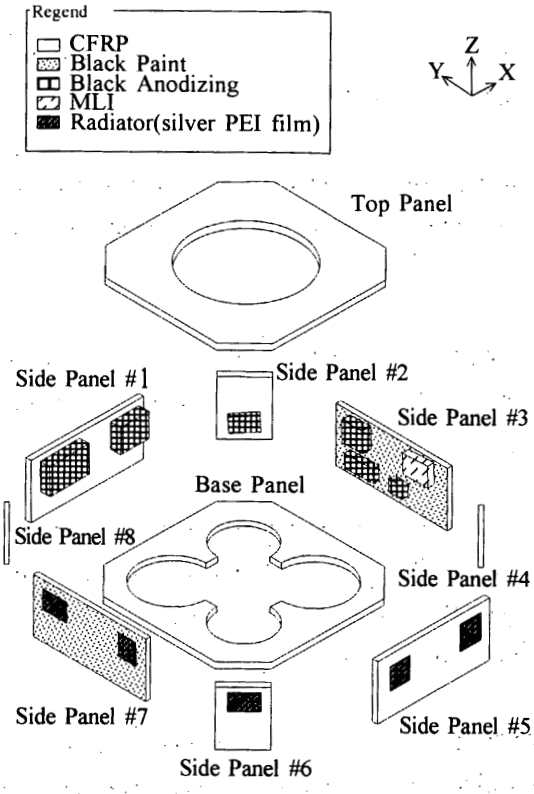

Figure 8-2. Thermal design concept of the main structure and components

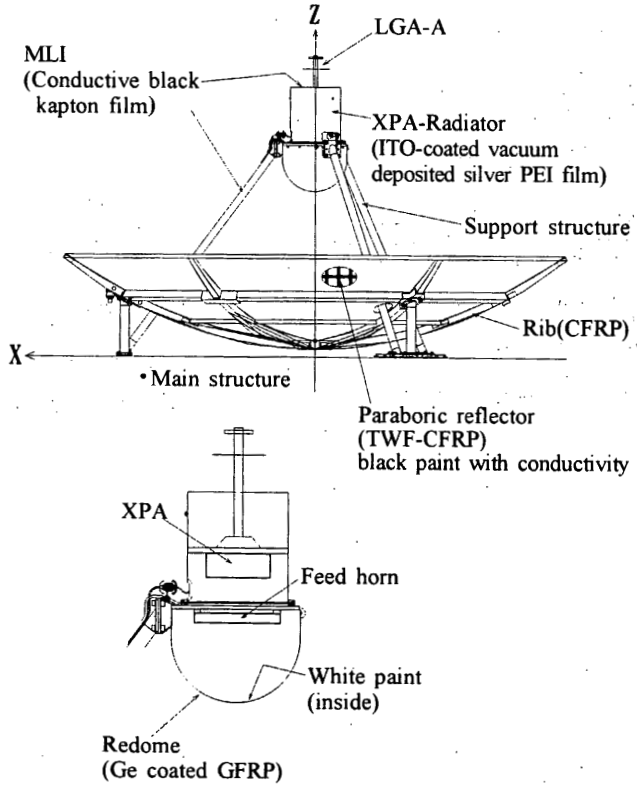

Figure 8-3. Thermal Design Concept of thr HGA

8.3.3 MLI

(1) Outer layer of the side and bottom MLI is made of the conductive black Kapton film for the stable and durable surface conductivity.

(2) Outer layer of the top MLI is made of the conductive second surface mirror film(ITO-coated 0.075 mm thick vacuum deposited silver PEI film) to reduce the penetration of the external heat input to inside spacecraft.

(3) The bottom MLI gets cold since there is not direct solar input on it. Therefore, the inner surface of them is aluminum deposited to reduce the heat radiation couplings between the main structure and them.

(4) MLI is made of four fundamental elements, inner and outer covers, spacers and radiation shields. The separator is ten denile polyester mesh and the radiation shield is 0.006 mm thick double side vacuum deposited aluminum film. (Figure 8-4a) MLI has seven layer construction, an outer cover, five radiation shields and an inner cover.

(5) PLANET-B's science mission strictly requires that all of the spacecraft external surface must be electrical conductive to achieve equal surface electrical potential. (Figure 8-4b)

-The outer most layer of the MLI has the surface conductivity less than 10^{6} $\Omega / \square$.

-The each layer of MLI are electrically connected to the ground terminal by inserting aluminum foil conductors between the layers.

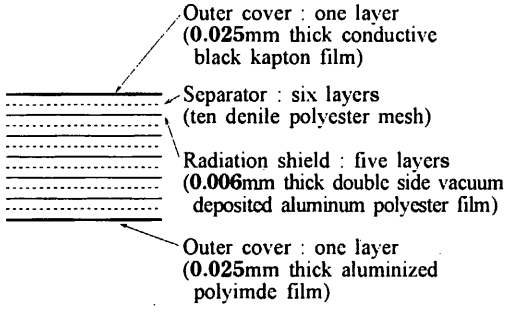

Figure 8-4a. Construction of MLI

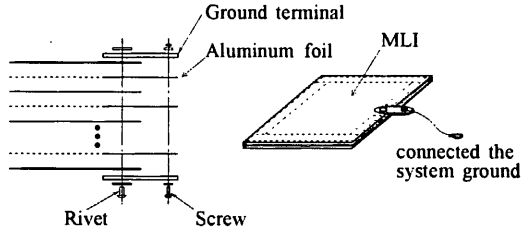

Figure 8-4b. Ground method of MLI

8.3.4 Battery

Figure 8-5 shows the thermal design of the batteries.

(1) Two units of battery are located on the aluminum skinned side panels below the SCP. SCP works as a sun shield for the battery.

(2) The allowable temperature range of the battery is 5 ℃ to 15 ℃. This range is much narrower than that of other components. Therefore, the battery is covered with MLI and equipped with automatically controlled heater. The battery radiator is isolated by low thermal conductive CFRP to minimize heat exchange from around the panels.

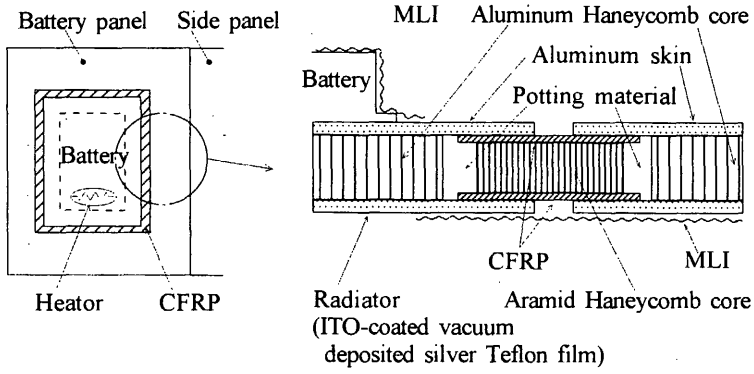

Figure 8-5. Thermal design concept of battery

8.3.5 Summary of the HCE's Heater

Table 8-2 shows the summary of the heaters controlled by Heater Control Electronics (HCE). The HCE controls 29 channels of the heaters attached to the propulsion subsystem, battery and SSC. Furthermore, the HCE measures 64 temperature sensors scattered all over the spacecraft.

HCE has two different heater control methods, automatic and manual control. The automatic control have two modes, group and non-group control.

All of heaters is divided into two groups, A and B. In the group control mode, They are activated alternatively to reduce the high peak power caused by high input voltage ,27.5V, in sunlite During eclipse, they are activated continuously in the non-group control mode since low input voltage, 16.3V, does not cause high peak power.

The heaters can be turned ON or OFF by ground override commands regardless of their temperatures in the manual control mode.

Table 8-2. Summary of the HCE's Heater

HCE ch	Item	Drive Power (W) @16.3V		Group (A/B)	Remark
		Prime Heater	Backup Heater		
1	Oxidizer Tank A/B	3.50		B	
2	Oxidizer Tank A/B Night	7.00		B	
3	Fuel Tank A/B	8.10		A	
4	Fuel Tank A/B Night	16.20		A	
5	Gas Helium Tank	2.00		A	
6	Gas Helium Tank		2.00	A	
7	Pipe(1)	4.60		B	
8	Pipe(2)	1.60		A	
9	Pipe(3)	5.00		B	
10	Pipe(4)	3.90		A	
11	Pipe(5)		3.90	B	
13	Valve Module A	2.51		A	
14	Valve Module B	2.51		B	
15	Valve Module C	2.10		A	
16	OME Valve 1	4.03		B	
17	OME Valve 2		4.03	A	
18	Engine Module A	5.61		B	
19	Engine Module A		5.61	A	
20	Engine Module B	5.91		A	
21	Engine Module B		5.91	B	
22	Battery A	8.50		B	
23	Battery A		8.50	A	
24	Battery B	9.50		A	
25	Battery B		9.50	B	
27	SSC	5.00		A	
36	Thermal Bed (Axial)	12.08		-	Manual
37	Thermal Bed (Tangential)	12.08		-	Manual
38	Thermal Bed (Radial)	6.04		-	Manual
39	Thermal Bed (OME Injection)	14.56		-	Manual

8.4 Thermal analysis

8.4.1 Thermal Analysis Case

Spacecraft thermal analysis has been performed using the detailed thermal mathematical model of the main structure combined with the simplified mathematical models of the HGA and the propulsion subsystem. The number of nodes in the model is approximately 800, 650 nodes for main structure and instruments, 150 nodes for HGA. The analysis cases are defined by combining the external thermal environment and the operational conditions. Table 8-3 shows the typical analysis cases.

- Trans-Lunar orbit

This is a hot case for the CI and the main structure. That is because the external heat input to the spacecraft is largest and the CI is always working.

- Trans-Mars orbit injection and Mars orbit Injection

In these cases, the battery becomes hot because the battery supplies spacecraft power during the maneuver. Furthermore, we must analyze taking into account of the thermal influence by the burn of the OME.

- Trans-Mars orbit

The external thermal environment is largely different between the near Earth orbit and the near Mars orbit. Most of the SI stay Stand-by during this case.

- Mars Orbit

The worst hot and cold cases occurs in the Mars orbit. In the worst hot case, most of the instruments are hot with maximum heat dissipation for full observation at REC mode. The worst cold case is expected during the longest Mars eclipse, which continues for 65 minutes. SI stay Stand-by during the worst cold case.

8.4.2 Flight Temperature Prediction

The Thermal mathematical models have been refined in the efforts to get good correlation between test results and analysis after the thermal model test. The flight temperature predictions using the refined mathematical models show satisfactory performance for the entire mission. Table 8-4 shows the flight temperature prediction for the components. In the flight temperature prediction, more than 10 ℃ margin is kept between the predicted results and the allowable temperature limits of them except for the instruments maintained above their lower temperature limit by heaters. We also confirmed that heater power has sufficient margin.

8.5 Thermal Model Test

8.5.1 Test Objects

The adequacy of the thermal design and thermal mathematical models was verified in the thermal model tests. The system level thermal model test was conducted in July 1996. The main objects of the thermal model test are as follows.

- Confirmation of the thermal design
  · The radiator size
  · The heater set points

- Verification of the thermal mathematical model
  · The conduction and radiation couplings
  · Transient temperature response in eclipse

- Establishment of the thermal vacuum test method for FM

- Verification of the heater sizing of the propulsion subsystem, battery and SSC

Moreover, HGA and OME thermal test was conducted separately before the system thermal model test from the following reason.

- HGA and OME are thermally decoupled from the main structure.

- Accurate external heat input to the HGA mesh reflector is only possible by the solar simulation.

The thermal design of HGA and OME was verified and the accuracy of its thermal mathematical model was improved using the test results.

8.5.2 Thermal Model Testing

Figure 8-6 shows the thermal model configuration. The model consisted of the main structure with dummy components, the HGA and the propulsion subsystem's prototype model. The HGA was installed on the top of spacecraft to simulate the heat radiation couplings from the top MLI to deep space through its mesh reflector. Figure 8-7 shows the test setup in the space chamber. Skin heaters on the top panel and side panel radiators simulated the external heat input to them. Table 8-5 shows the twelve testing cases. We confirmed the effective emissivity of the MLI, adequacy of heater capacity and setting of the on/off points. We refined the thermal couplings in the thermal mathematical model.

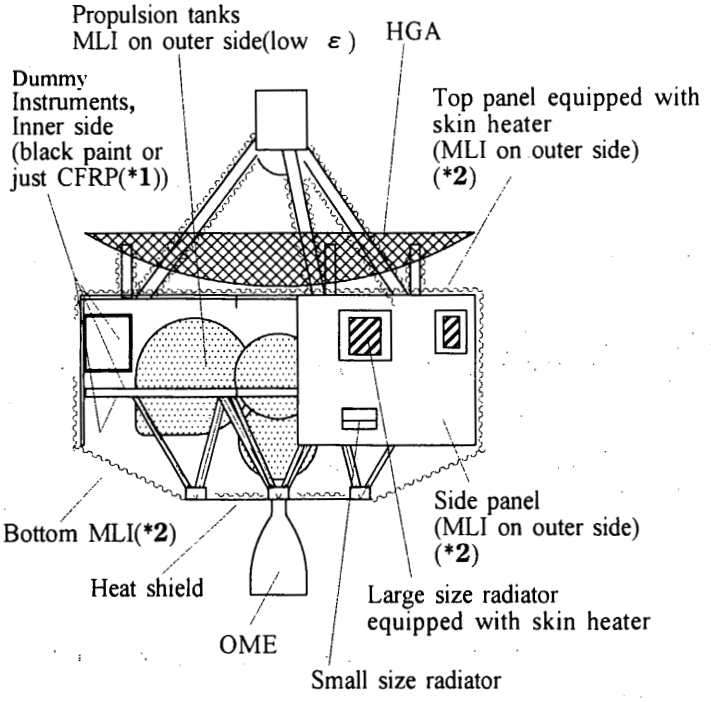

Note *1) Except the instruments to be isolated from environment.
*2) Non conductive coated MLI.(limited to the thermal test mode)

Figure 8-6. Thermal model test configuration

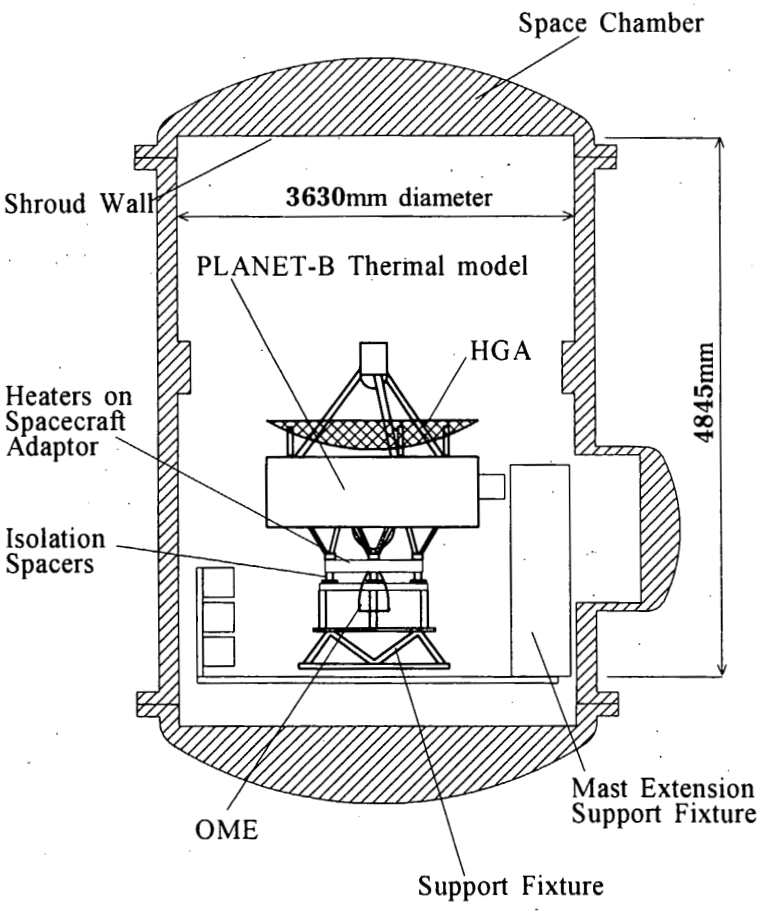

Figure 8-7. Setup in the space chamber

9. Radiation Environment

H. Hayakawa(ISAS)
NEC cooporation
Meisei Eelectric Co., Ltd.

9.1 Estimation

Mission life of PLANET-B is expected more than 3.5 years and shceduled lauch date is July 4, 1998. Since next solar maximum is expected on 2000, radiation environment of PLANET-B is that of solar maximum. Tolerance of total dose and protection for single event latch-up are determined based on following estimation:

9.1.1. Total Doze

Figure 9.1-1 shows the estimated total dose versus shield depth. Used conditions for this calculation are:

Model: sphare model
Electron: AE8MIN
Proton: AP8MIN
Solar Proton: SOLPRO (1AU/Solar Max)
Reliability for flare event: 99%
Orbit:
Electron/Proton: 7000km x 400,000km (parking orbit)
Length of stay for Electron/Proton: 53days
Equivalent length of stay for SOLPRO modeling (1AU/Solar Max):
11 month

Total dose is expected to less than 10^4 for shield depth of more than 0.2 g/cm^2 which is less than 1mm thickness alminum. Since more than 1mm thickness alminum (or equivalent mass) is expected for electrical parts, total dose tolerance of $>10^4$ rads is required for the parts used on PLANET-B.

9.1.2. Protection for Latch-up

Figure 9.1-2 shows high energy particle flux versus Integral LET for verious weather index. As is seen from the figure 9.1-2, flux of the high energy particle decrease rapidly for the parts which has >30MeV cm^2/gr LET and almost no flux for the material which has >100 MeV cm^2/gr.

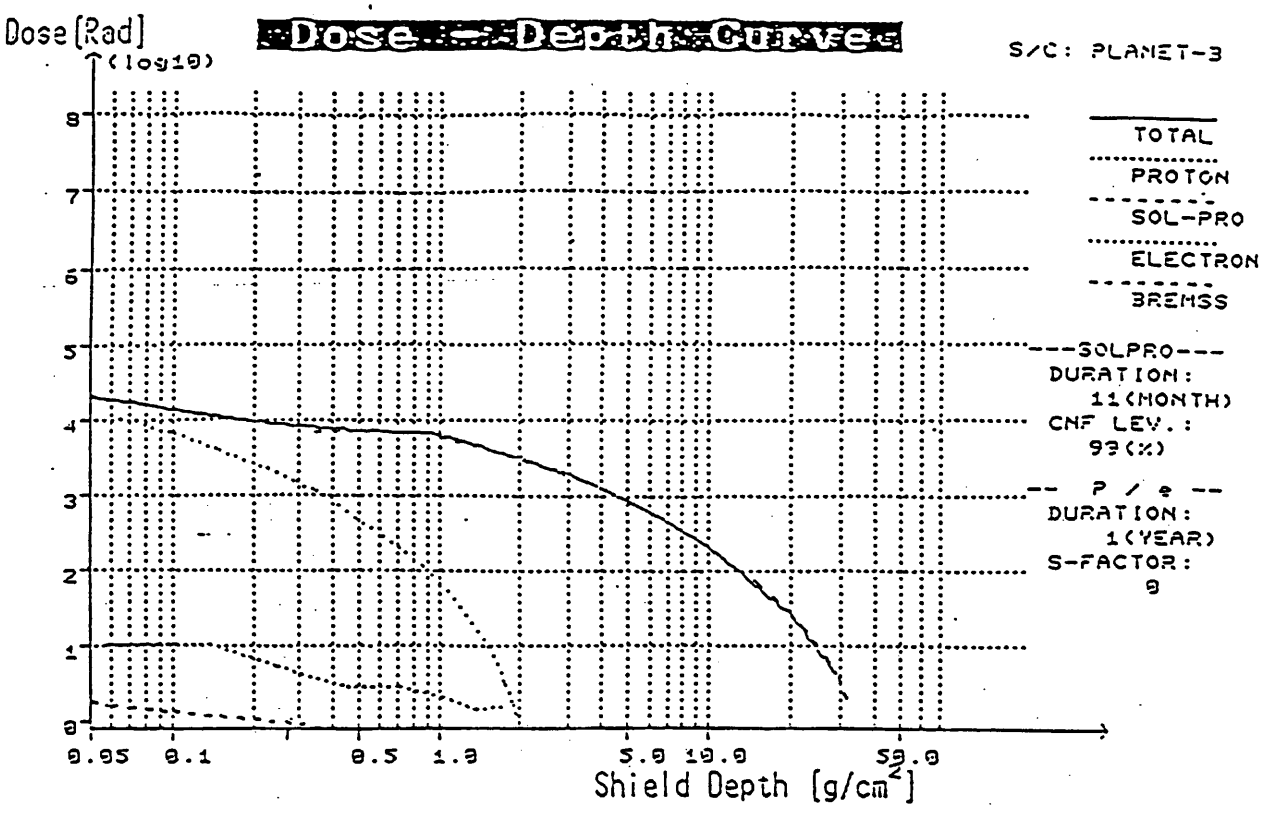

Figure 9.1-1 Dose-Depth Curve

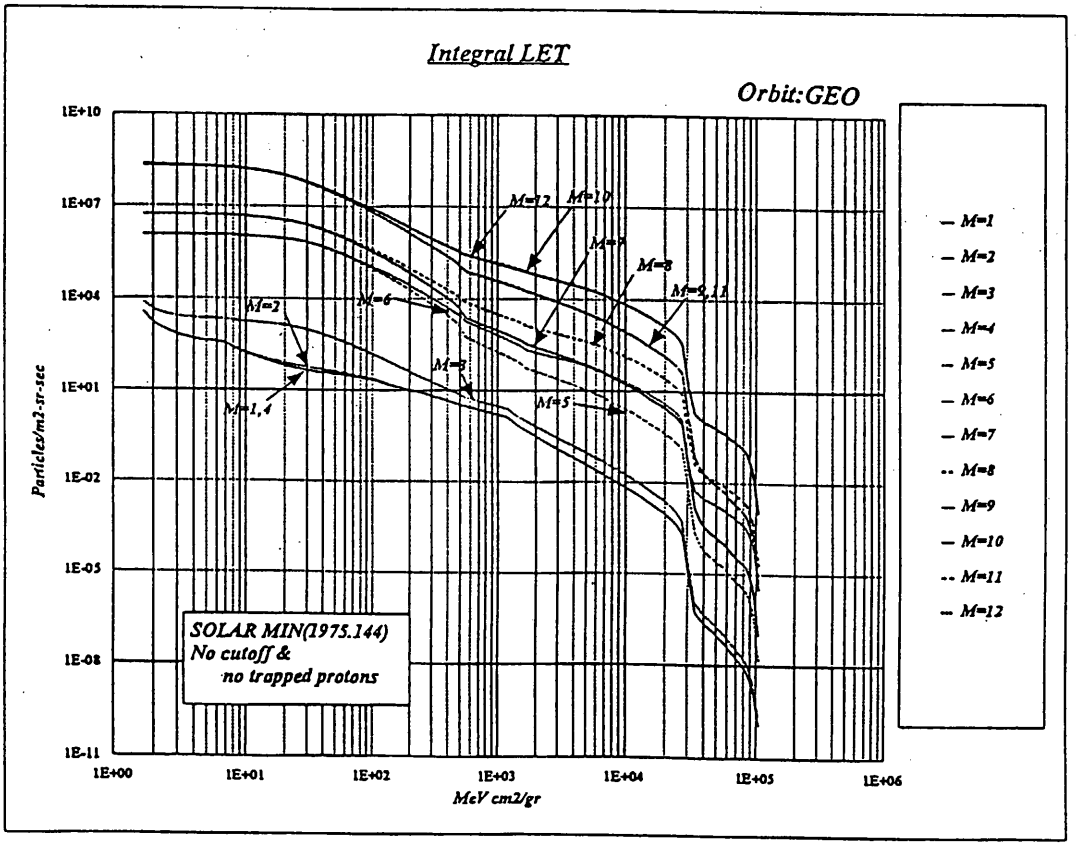

Figure 9.1-2 Integral LET

Since occurrence possibility of single event latch-up is quite low, no protection for single event latch-up is required for electrical parts which have threshold LET of >50MeV cm^2/gr.

9.2 Solar Particle Monitor (SPM)

9.2.1 Overview

As shown in Figure 9.1-2, particle flux is highly depending on the weather index. To reduce the possibility of single event latch-up for scientific instruments which uses low threshold LEP parts, Solar Particle Monitor (SPM) is onboard PLANET-B. SPM uses 200μm thickness silicon photo diode to detect high energy particles. Resopnce curve of SPM is shown in Figure 9.2-1. As shown in Figure 9.2-1, SPM has sensitivity not only ions but also electrons. SPM has 4 threshold levels (level 0 to 3) which correspond deposited energy of 25keV, 96keV, 464keV, and 514 keV, respestively. Level 0

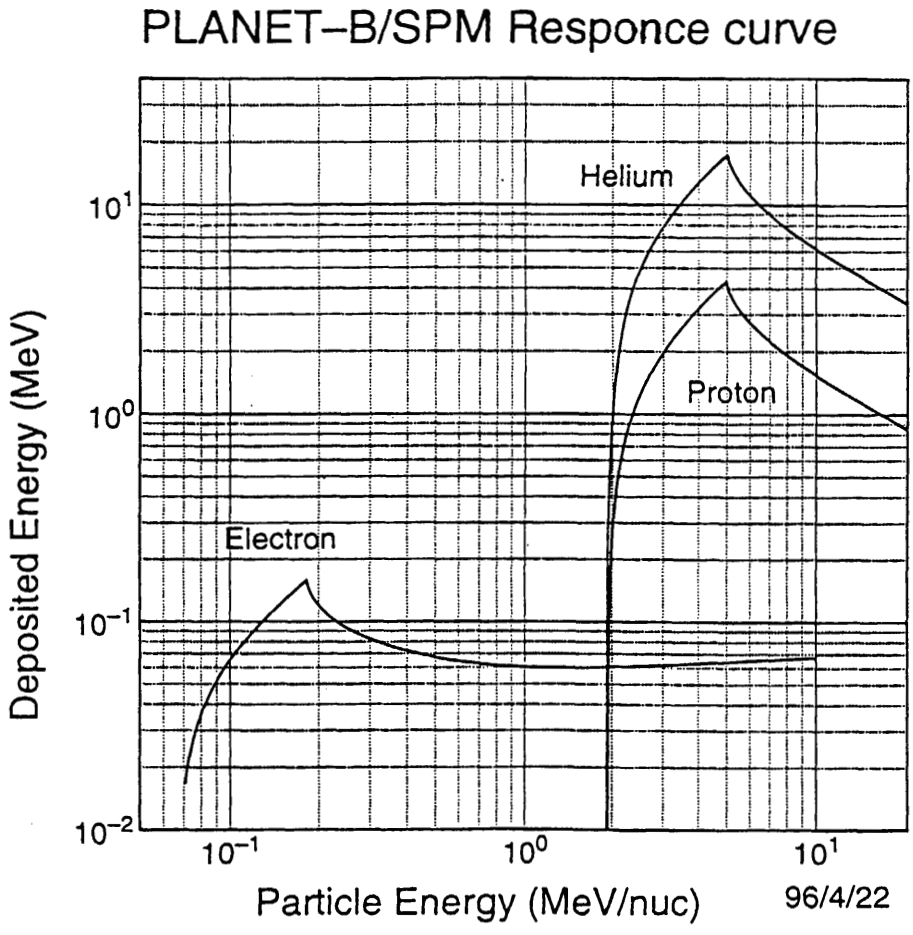

Figure 9.2-1 Responce Cureve for SPM

measures noise counts for health check during integration test. Level 1 measures both high energy electrons and ions. Levels 2 and 3 are for nominal operation and measure high energy ions which might cause single event latch-up. The output pulses of SPM are accumlated for 2 miniutes in TCI and telemetered as HK data. If 3 countinuous SPM counts data exceeds a certain threshold DHU issues an autonomous OG to turn off each scientific instruments.

9.2.2 **Size, Weight, and Power Consumption**

9.2.2.1 **Size and Weight**

Size(mm x mm x mm)	Weight(gr)
25 x 70 x 70.5	85 +/- 10

Mechanical drawing of SPM is attached as Figure 9.2-2.

9.2.2.2 **Power**

Mode	Power(W)
SPM OFF	0
SPM ON	0.08 +/- 0.02

9.2.3 **Command & Telemetry Items**

9.2.3.1 **Command**

XY Code	Command Name	Function	Telemetry
80	TCI_SPM_ON	SPM Power ON	TCI5 Bit 0 = 1
81	TCI_SPM_OFF	SPM Power OFF	TCI5 Bit 0 = 0
82	TCI_SPM_LV0	SPM Level 0 Set	TCI5 Bit 1,2 = 0
90	TCI_SPM_LV1	SPM Level 1 Set	TCI5 Bit 1,2 = 1
91	TCI_SPM_LV2	SPM Level 2 Set	TCI5 Bit 1,2 = 2
92	TCI_SPM_LV3	SPM Level 3 Set	TCI5 Bit 1,2 = 3
A0	TCI_SPM_CNT_CLR	SPM Counter Clear	TCI4 Bit 6,7 = 0
A1	TCI_SPM_GUARD_ENA	SPM Guard Pulse Enable	TCI1 Bit 4 = 1
A2	TCI_SPM_GUARD_DIS	SPM Guard Pulse Disable	TCI1 Bit 4 = 0

9.2.3.2 **Telemetry Items**

9.2.3.2.1 **Bi-level Data**

PIM ADRS (HEX)	S/S NAME	Bit	ITEMS	STATUS	
				1	0
8000	TCI	4	TCI_SPM_GUARD_EN/DS	EN	DS
8004	TCI	0	TCI_SPM_ON/OF	ON	OF

9.2.3.2.2 **Other Status Data**

PIM ADRS (HEX)	S/S NAME	Bit	ITEMS	
8003	TCI	6,7	TCI_SPM_OVER_CNT	Number of data which exceed data threshold value continuously
8004	TCI	1,2	TCI_SPM_LVL_STATUS	SPM sensor threshold level
F817	TCI	0-15	TCI_SPM_DATA	SPM data count
F819	TCI	0-15	TCI_SPM_THR	Data threshold value

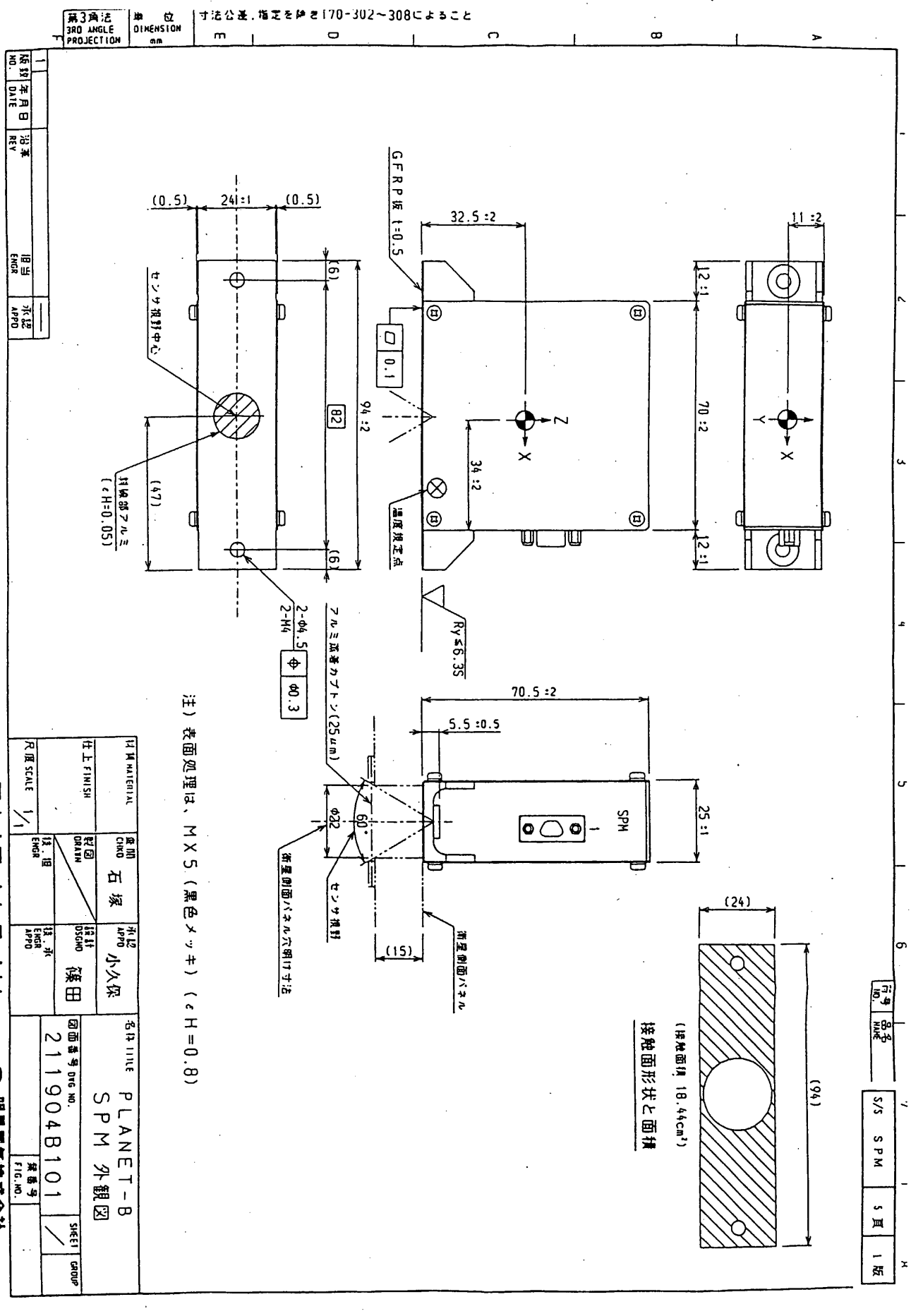

Figure 9.2-2 Mechanical Drawing of SPM

10. Other Onboard System

10. 1 EPT-SA(Electrical Programmable Timer-Satelite)

M. Kono(ISAS)

1. Introduction
The timer ignition system of PLANET-B consists the timer (EPT) section, backup power supply (EPT-PS) section, and ignition relay section in the EPT-SA case. Fig. 1 shows the diagram of the satellite timer ignition system.

2. Timer sequence and commands
Regarding the timer items of PLANET-B, ten are for the EPT-SA section, and two for the command of satellite timer ignition system.
Among these timer items, five are for the ignition system.
Table 1 shows the items of satellite timer sequence and commands.

Table 1 Timer sequence and commands

[1] Timer sequence

No.	Item	Ignition	Setting time (sec)
	EPT-SA START		Z+ 0
1	AOCE-RESET		Z+ 1
2	INS KM-MODE		Z+ 2
3	CM-ARMING		Z+ 3
4	NZL-EXT	◎	Z+ 5
5	MEC-DSP	◎	Z+ 6
6	B4-IG	◎	Z+ 7
7	INS SA-MODE		Z+171
8	B4-SEP	◎	Z+176
9	PDL-ARMING		Z+251
10	EPT-SA STOP		Z+261

[2] Commands

CODE	Command name	Ignition
62	PDL-DPLY	◎
42	EPT-STOP/OFF	

Note (1) Z: Startup time (sec) when EPT-SA is started by a signal from M3-EPT.
Note (2) CM-ARMING: Logic arming of all commands to be input to EPT-SA.
But, the command to be "ENABLE" when a CM-ARMING is performed is only "timer stop (EPT-STOP)."
Note (3) PDL-ARMING: By performing CM-ARMING and this ARMING, a paddle extension command (PDL-DPLY) becomes "ENABLE".

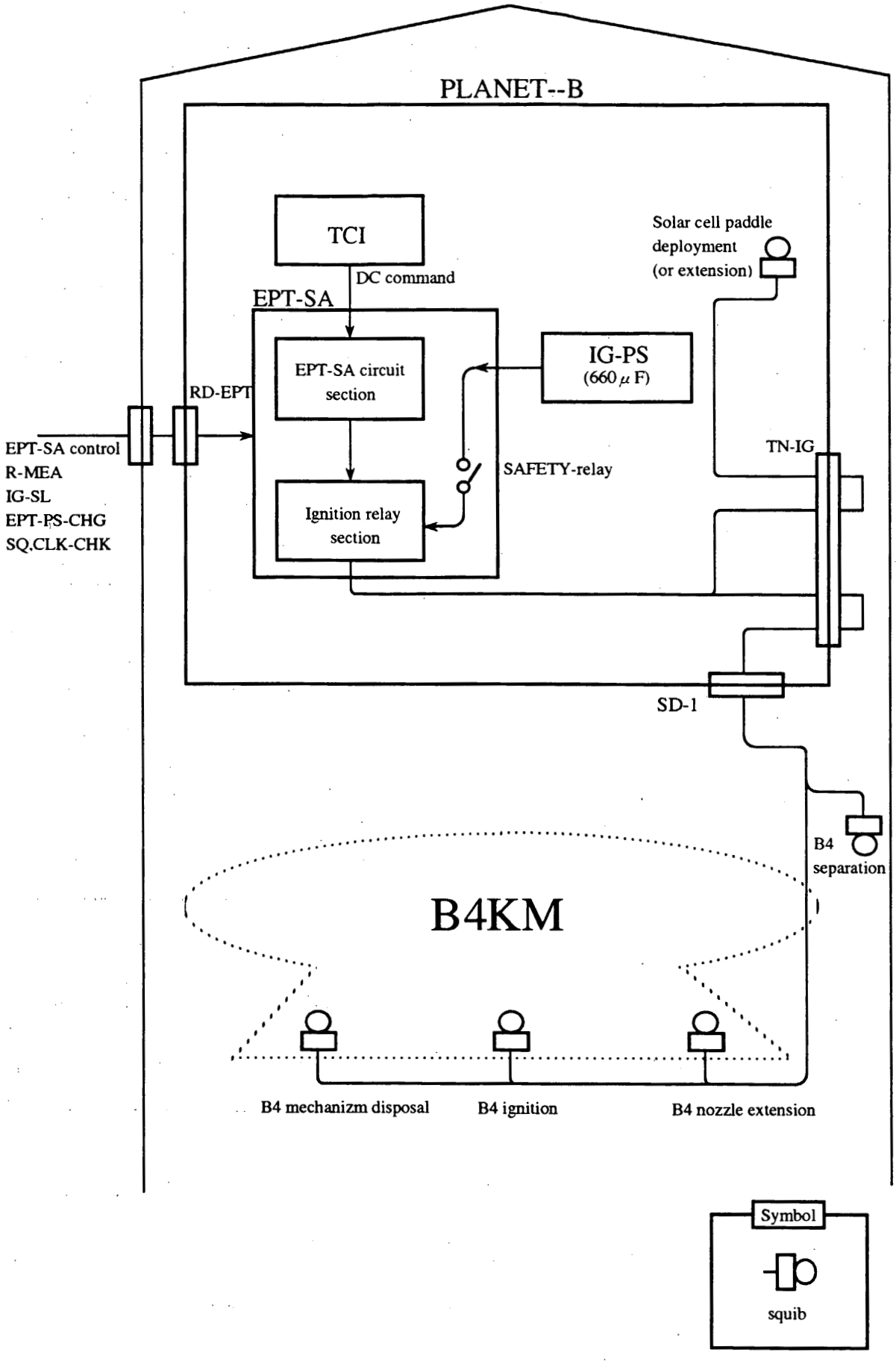

Figure 1 Block diagram of satellite timer ignition system

After the execution of CM-ARMING command, the EPT-STOP/OFF command becomes "ENABLE", and in addition, when the"EPT-STOP/OFF" command is executed before the execution of PDL-DPLY command, EPT-SA stops its operation;. or, when the "EPT-STOP/OFF" command is executed after the execution of PDL-DPLY command, EPT-SA turns off its power supply.

3. Timer ignition system

PLANET-B is launched to the planned orbit by igniting the 4th stage motor according to the EPT-SA sequence, then the solar cell paddle deployment (or extension) etc. are successively performed by commands.

The squib connection diagram and the ignition energy are shown in Table 2.

Table 2 Squib connection diagram and ignition energy

Item of ignition sys	Squib connection (Squib combined resistance)	Line resistance (W)	Compound resistance (W)	All effective energy (worst value)	Energy /squib (mj)
NZL-EXT	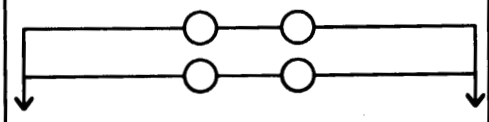	1.15	0.8	90.5	22.6
MEC-DSP	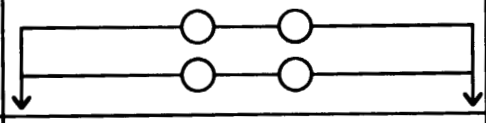	1.21	0.8	87.7	21.9
B4-IG	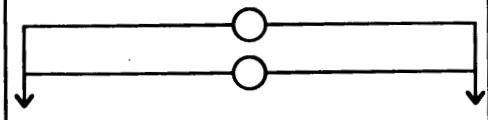	1.14	0.4	58.2	29.1
B4-SEP	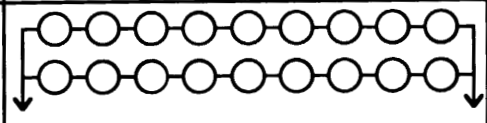	1.45	3.6	128.2	7.1
PDL-DPLY	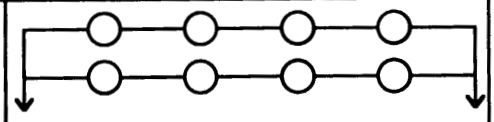	0.69	1.6	151.3	18.9

Note (1): Each resistance value indicates a nominal value, and each energy indicates the worst value.

Note (2): The calculation conditions to feed electricity to the squib are as follows:
The squib resistance value is 0.8±0.1W, the line resistance is the actual measured value ±10%, the IG-PS initial voltage is 29.0±1.5V, the capacitor capacitance is 660mF±10%, and the line resistance is the actual measured value of the line between EPT-SA and squib.

4. Command operation

To protect against an erroneous transmission from the command system, an ARMING is provided in the EPT-SA.
The contents of ARMING are shown in the following. Fig. 2 shows the CM-ARMING diagram, and Table 3 shows the ARMING effective band of each command item.

*CM-ARMING (Execution by the timer sequence)
*PDL-ARMING (Execution by the timer sequence)
*EPT-OFF-ENABLE (ENABLE is executed at the same time of the execution of "paddle deployment" by command)

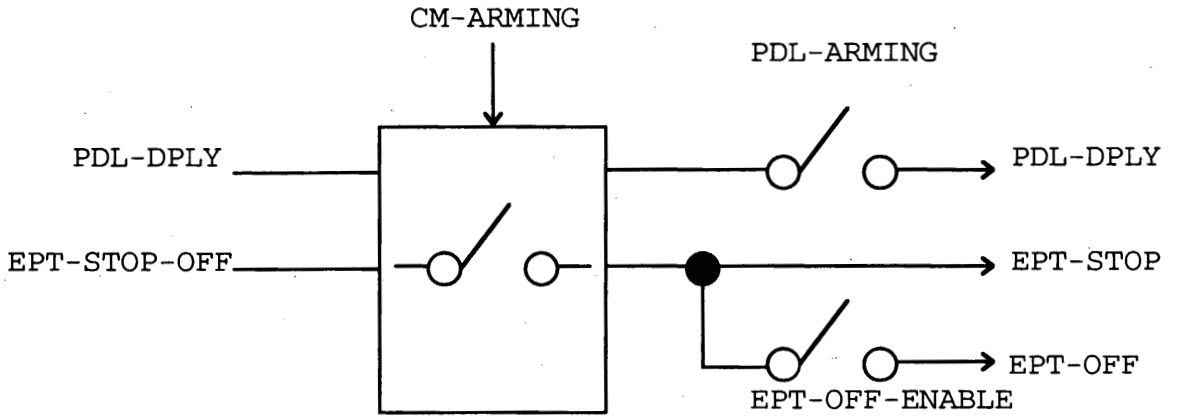

Fig. 2 CM-ARMING diagram

Table 3 "ENABLE" command areas when normally operated

Command \ Timing	*1	*2	*3	*4	
PDL-DPLY	Disable		Enable		Disable
EPT-STOP/OFF	Disable	Only EPT-STOP is "Enable"		EPT-OFF is "Enable"	Disable

Note *1: Execution of CM-ARMING (Timer sequence)
*2: Execution of PDL-ARMING (Timer sequence)
*3: Transmission of PDL-DPLY command (Execution of EPT-OFF-ENABLE)
*4: Transmission of EPT-STOP/OFF command

5. Timer ignition system equipment (EPT-SA)

5.1 Overview

The satellite timer (EPT-SA) for PLANET-B outputs (i) the ignition signal for "Ignition of the 4th stage motor", etc. and (ii) the control signal for "Switching of measuring channel of the measurement equipment", etc. according to the internally memorized sequence (in P-ROM).

In addition, the satellite timer has the function to execute solar-cell paddle deployment by command signal, and it consists of the timer (EPT), backup power supply (EPT-PS), and ignition relay sections. Fig. 3 shows the EPT-SA system diagram and Fig. 4 shows its dimensions. The major functions and features of EPT-SA system are summarized below.

1) Power is provided in parallel by "Power Supply Units(PSUs)" and "backup power supply (EPT-PS). If the power from the PSUs has a moment interruption, the backup power supply supplies only to +5V system (Logic section's power supply).

2) Control signals are provided for the 4th stage motor ignition, sensor channel switching, reset of AOCE, and others The timer sequence of EPT-SA is started by the 3rd stage timer (M3-EPT) and stops after all sequences are conpleted.

3) The ignition signal needed for the solar-cell paddle deployment is generated by the commands of DHU signal.

4) All commands become "ENABLE" by the timer item "CM-ARMING". The paddle deployment command becomes "ENABLE" by the timer item "PDL-ARMING". The EPT-OFF (power supply off) command becomes "ENABLE" after a paddle deployment command is received.

5) The signals of "timer-sequence and commands' sequence-monitoring", "operation-check monitoring of crystal-oscillation circuit (Clock monitor)", and "control operation-check monitoring of commands (monitoring of "Arming 1 to 3")" are outputted to the external equipment.

6) A crystal oscillator is used for the reference oscillation to upgrade the timer accuracy.

7) P-ROM ICs (fuse type) are used in triple for the timer sequence setting, and in addition, a "2 out of 3" redundancy system is adopted to improve the reliability.

8) The ignition relay section outputs the ignition signal, and also provides a function to measure the resistance of each ignition system by a remote control from the ground equipment.

5.2 Electrical performance

[EPT section]

(1) System:
- Clock section: Triple
- Program section: Triple (2 out of 3)
- Ignition system output: Single
- Control system output: Single

(2) Driving voltage: $+12.5^{+4.0}_{-0.5}$ VDC

(3) Driving current: Less than +90 mA (Less than +500 mA at peak)

(4) No. of setting items: 10 items (Ignition sys: 4 items, Control sys: 3 items, Internal control sys: 3 items)

(5) Command items: 2 items (Ignition sys: 1 item, Internal control sys: 1 item)

(6) Max. setting time: 511 sec

(7) Min. time interval: 1 sec

(8) Oscillation method: Crystal oscillation method

(9) Reference oscillation frequency: 32.768 kHz±10%

(10) Setting accuracy: 0.1%

(11) Output signal time interval: 0.5 sec

(12) Program method: Fuse type P-ROM

(13) Output signal: 6.4±1.0 VDC, less than 300 mA
AOCE reset signal: ±2.0~4.0 VDC (Differential output)

(14) Output impedance: 10±1kW

(15) Insulation resistance between each terminal and housing cabinet: More than 50MW(50±5 VDC)

(16) Dielectric withstand voltage between each terminal and housing cabinet: 50±5 VDC for one min or more

(17) External control signal
POWER OP: 28.0±2.8 VDC, less than 220 mA
START ON: +18.0±1.8 VDC, 64.0±6.4 mA/sec (M3-EPT)

(18) Answer signal
POWER ANS: Contact-point signal (Safety side, Flight side)
START LINE: Less than 30 VDC, less than 10 mA

(19) Monitor output signal
Sequence monitor: Binary, 4-bit, parallel
ON = [1] +4.5 ~ +5.0 VDC
OFF = [0] -0.3 ~ +0.3 VDC
Clock monitor: 1 bit, 1 Hz
ON = [1] +4.5 ~ +5.0 VDC
OFF = [0] -0.3 ~ +0.3 VDC
Arming monitor: 3 bits
ON = [1] -0.3 ~ +0.3 VDC
OFF = [0] +4.5 ~ +5.0 VDC

(20) Performance check monitor signal (at the test of satellite only)
CLK check: Less than +30 VDC, less than 10 mA
SQ check: Less than +30 VDC, less than 10 mA

[EPT-PS section]

(1) Battery type: Ni-Cd secondary battery P-01/7W1
(2) Nominal voltage: 8.4 V
(3) Nominal capacity: 110 mAH
(4) Load capacity(110 mAH discharge) : +20°C, more than 40 sec
(5) Charging current and time: 11 mA, 15 H
(6) Charge-discharge cycle: More than 500 times
(7) Usable temperature range: -10 ~ +50°C
(8) Charging temperature range: 0 ~ +45°C
(9) Storage temperature range: -20 ~ +65°C
(10) Self discharging amount: The max. capacity decrease should be 35% or less, when the battery is left for one month within the range of storage temperature after fully charged.

[Ignition relay section]:

(1) No. of ignition signal items: 5 items
(2) Relay contact capacity: +28 VDC, 2A
(3) Ignition power supply input: +29 VDC
(4) Ignition relay operation signal input (At the time of IG-Line continuity check): +6±1 VDC, 150±25 mA
(5) SAFETY SW operation signal: 28.0±2.8 VDC, less than 95.0 mA
(6) SAFETY SW answer: Relay contact point (Safety side, Flight side)
(7) Continuity resistance measurement (Measured current between H and L): Less than 2 mA
(8) Insulation resistance between each terminal and housing cabinet: More than 20 MW (50±5 VDC)

5.3 Mechanical performance

(1) Dimensions: 121±2.5 (W) × 225±2.5 (D) × 90.5±1.8 (L) (mm)
(2) Weight: 1.50±0.15 kg
(3) Material: A5052 Aluminium alloy
(4) Surface treatment: Alumite (Mounting surface) Black painting on alumite (Other than mounting surface)

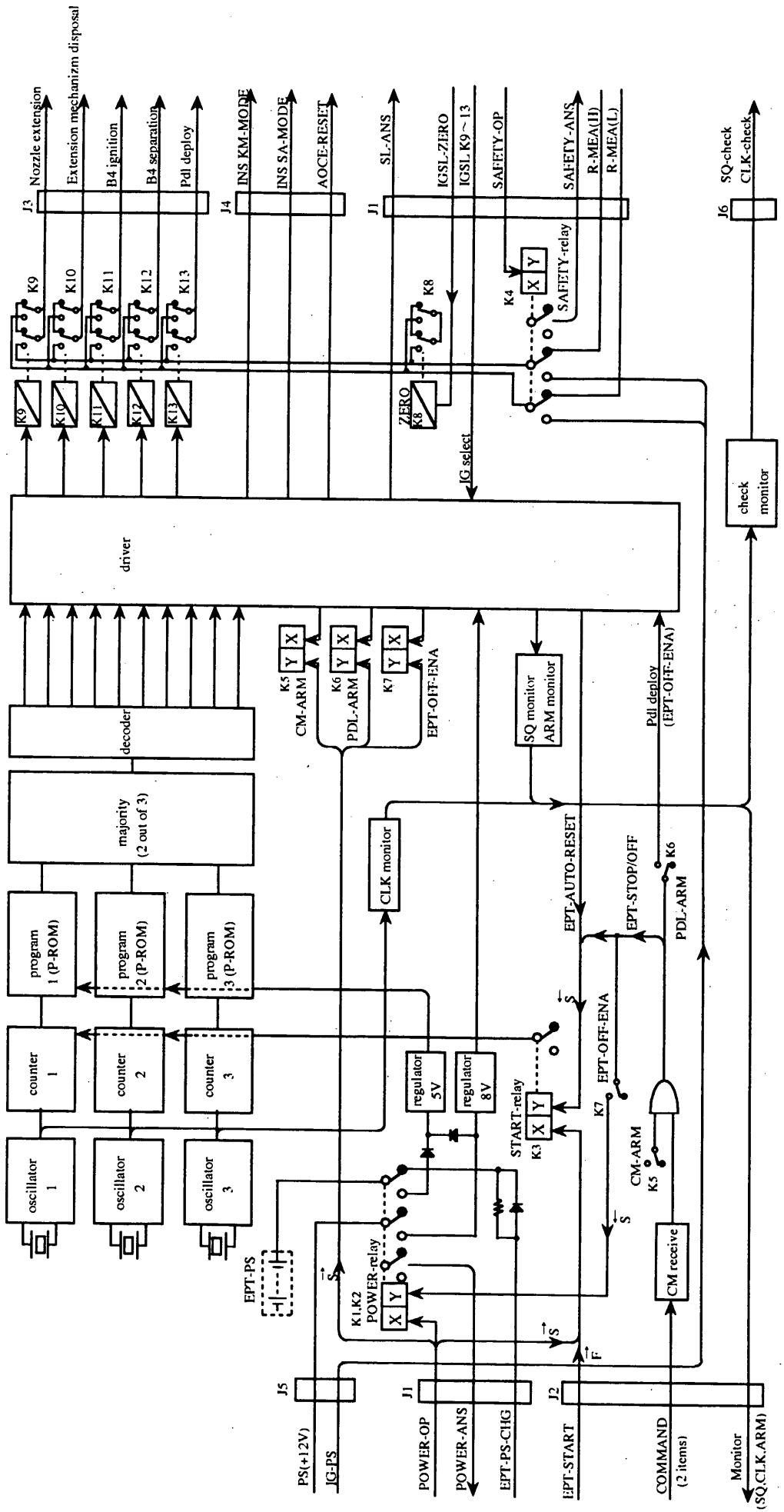

Figure 3 Block diagram of PLANET-B EPT-SA

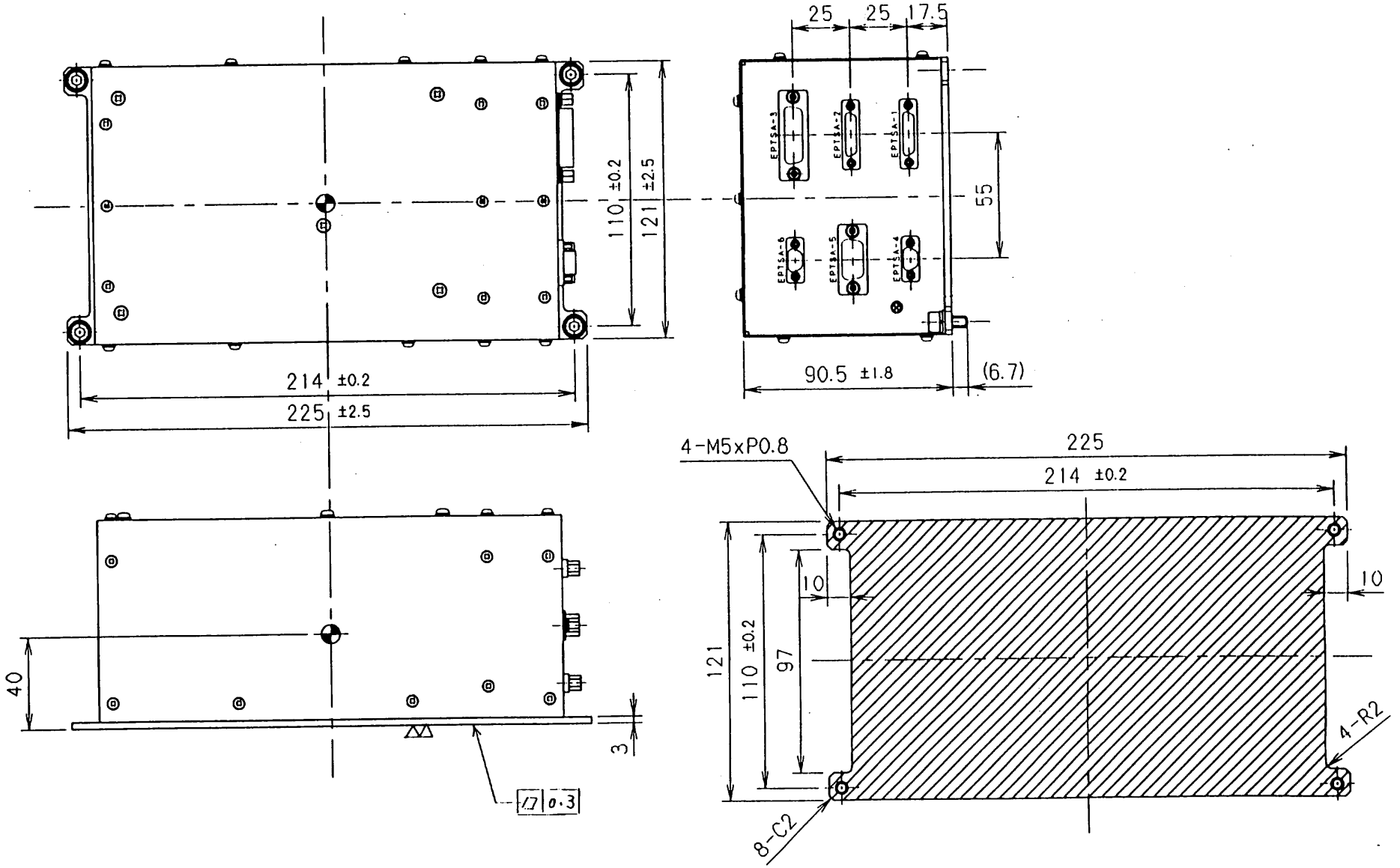

Figure 4 Appearance diagram of PLANET-B EPT-SA

10.2 Wire Harness

I. Nakatani (ISAS)
NEC Corporation

Planet-B wire harness has stringent requirements on the suppression of EMI and the reduction of weight. Weight reduction is a major reason for the introduction of a bus-line configuration for DHS (Data Handling System) and a distributed power conversion system. MDM type connectors, as opposed to D-sub type ones, are used to reduce weight for most of the interfaces between the harness and components.

Differential configuration with twisted pair shield cables is used as a baseline for digital interface to reduce EMI. Twisted pair shield cables are used, to suppress EMI, for hot and return lines from and to the primary power source. The total weight of the wire harness is 13.82kg.

Wire harness is categorized as follows :

PIM lines : twisted pair shield cables + MDM connectors

Power lines : twisted & shield cables + MDM or D-sub connectors

RF lines : Semi rigid or flexible co-axial cables + co-axial connectors

Subsystem lines

10.3 Nitrogen Purge System

Y.Saito (ISAS)
NEC Corporation

The nitrogen purge is used to protect performance degradation of some components by dust, moisture, oxidation and so on. The nitrogen purge shall be carried out through;

(a) integration and tests at ISAS,
(b) Transportation from ISAS to KSC, and
(c) Launch site operation at KSC.

Figure 10.3-1 show the configuration of nitrogen purge. Table 10.3-1 shows the flow rate of nitrogen purge and Figure 10.3-2 shows pipng layout of the nitrogen purge equipment.

10.3.1 at ISAS

Figure 10.3-1(1)～(3) shows the configuration of purge in PLANET-B FM integration and tests at ISAS. Nitrogen purge shall be carried out during all integration and tests except for the Thermal Vacuum Test. In several tests, gas umbilical connectors may be removed only when the tests are going on; *e.g.*, Spin Test, Mass Properties Measurements and some environmental tests. During the Shock and Vibration Tests, Dynamic Balance Adjustment and for storage of the spacecraft in the mechanical environmental tese room at ISAS, a clean booth purged by dray air shall be used.

10.3.2 During the Transportation

Figure 10.3-1(4) shows the configuration of nitrogen purge in spacecraft container. The spacecraft is transported from ISAS to KSC in the container that is filled with nitrogen gas instead of the air at the start of the transportation.

10.3.3 at KSC

Figure 10.3-1(5)～(11) shows the configuration of purge in launch site operation at KSC.

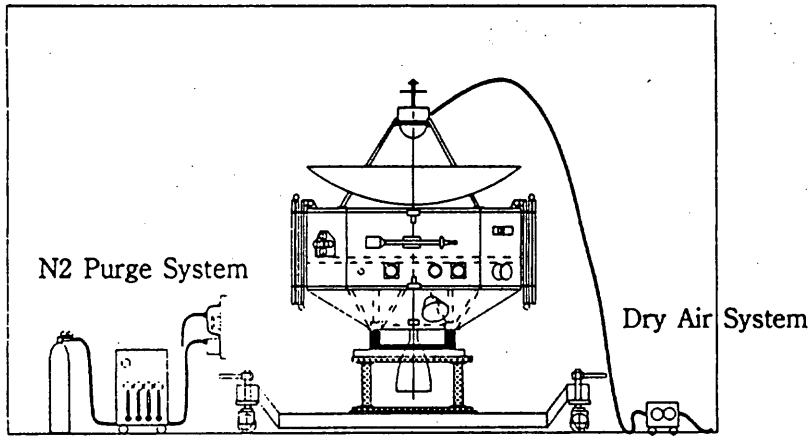

(1) Clean Room at ISAS

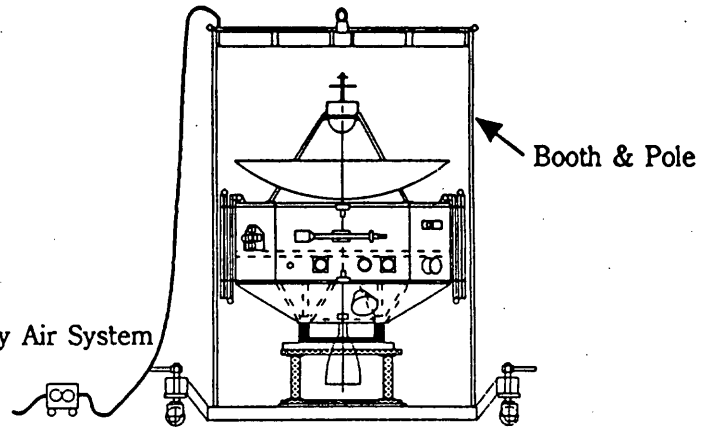

(2) Transportation in the Building–C

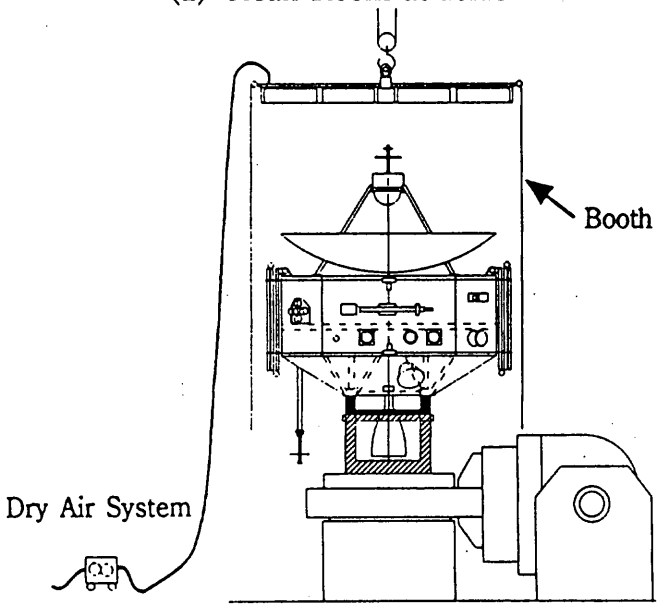

(3) Vibration, Shock, MOI, DB

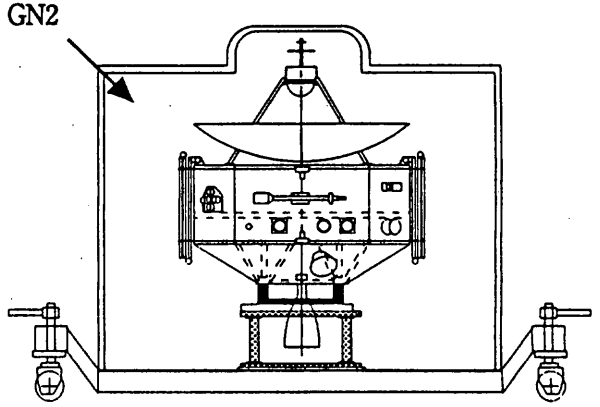

(4) Spacecraft Container

Figure 10.3-1 Nitrogen Purge Configuration (1/3)

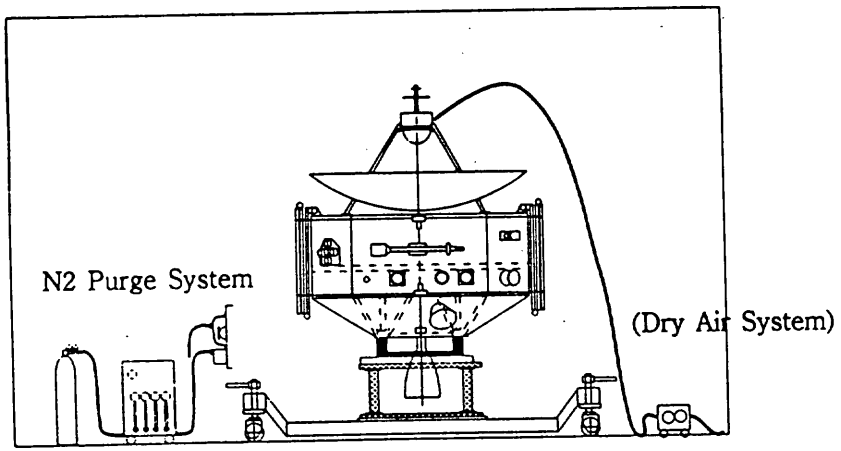

(5) Clean Room at KSC

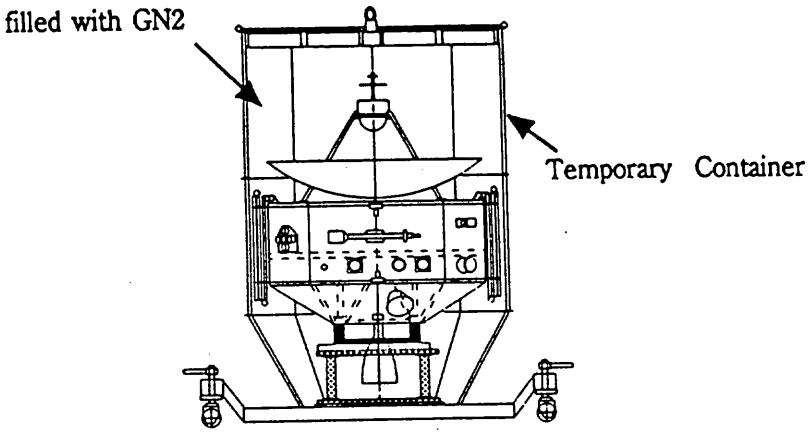

(6) Clean Room → Clean Booth

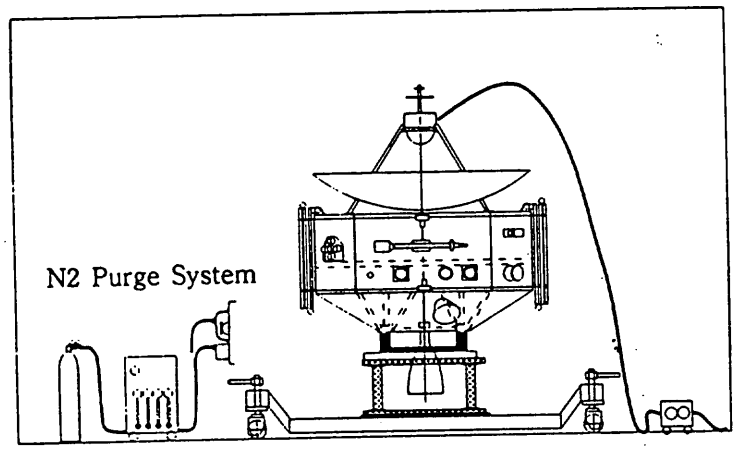

(7) Clean Booth before mating to KM

(8) Clean Booth after Fairing Installation

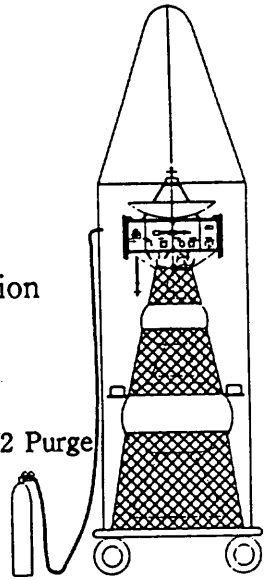

Figure 10.3-1 Nitrogen Purge Configuration (2/3)

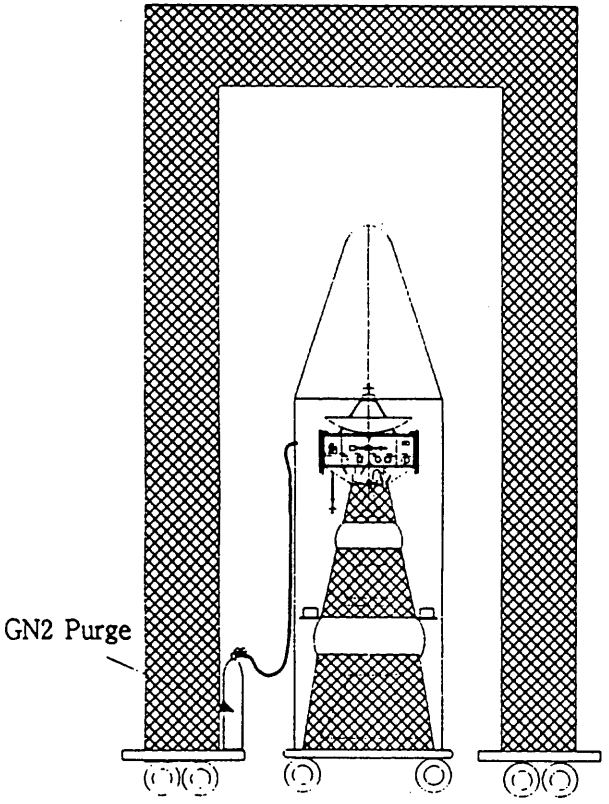

(9) Clean Booth →Launch Station

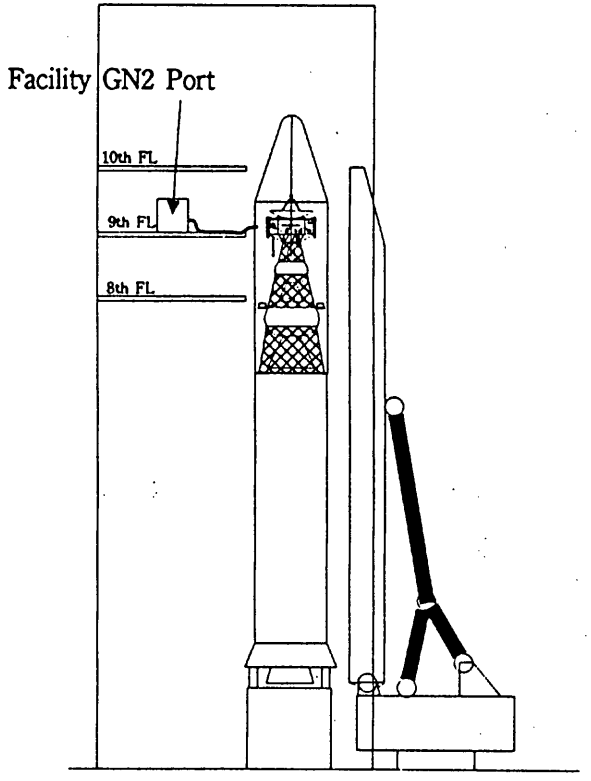

(10) Launch Station

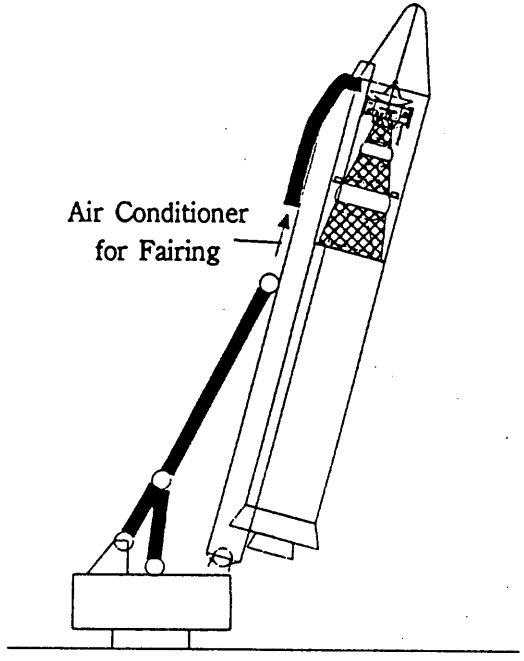

(11) Launcher Set

Figure 10.3-1 Nitrogen Purge Configuration (3/3)

Table 10.3-1 Flow Rate of Nitrogen Purge in the System Test.

S／S	Unit	Flow Rate (l/min.)	Valve No. (figure 10.3-2)	Total Flow
IMI	IMI	0.2	(3)	0.2
PSA	EIS－S	0.2	(4)	0.2
	ESA－S	0.2	(5)	0.2
	ISA－S	0.2		0.2
	XUV－S	0.2	(6)	0.2
TPA	TPA－S	0.2	(7)	0.2
UVS	UVS－G	0.2	(2)	0.4
	UVS－P	0.2		
MST	MST	0.1	(1)	0.1
Total				1.7

TEST	LINE	
Function	8	
Spin	1	Booth
EMC	8	
DB	1	Booth
Temp	8	
VIB	1	Booth
Pyro	1	Booth
TVT	TBD	TBD

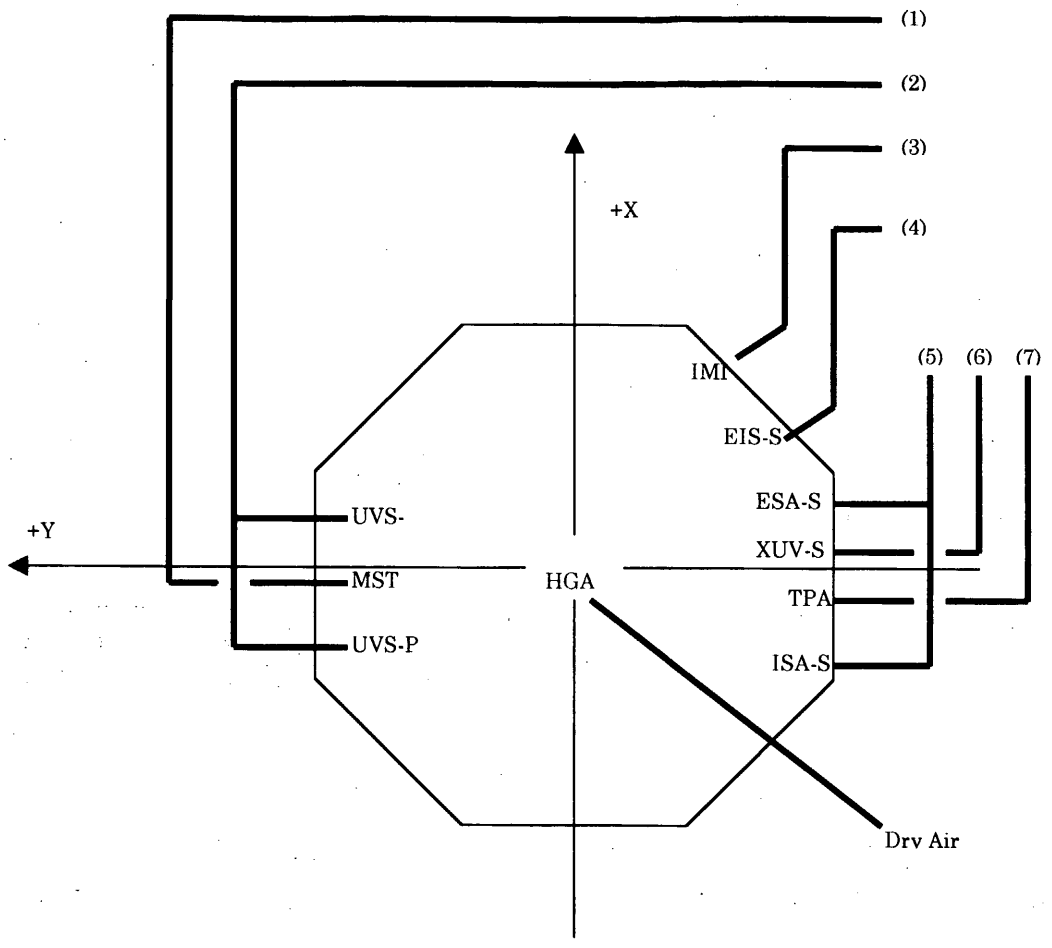

Figure 10.3-2 PLANET-B GN2 Purge Piping Layput

10.4 INS-SA (INStrument-SAtellite)

M. Kono(ISAS)

1. Introduction
INS-SA (Instrument-Satellite) is an equipment to measure such items as vertical and lateral accelerations, and vibration of the spacecraft and the kick-motor combustion internal pressure to check the spacecraft performance.

2. Functions
1) INS-SA amplifies signals from each detector to the specified levels and transmits the outputs to the telemetry system.

2) The longitudinal accelerometer has two measuring ranges: XSA-H measures the acceleration at the launch and XSA-L measures the residual acceleration of the spacecraft after the kick-motor has burnt out. The measured data is transmitted through the satellite telemeter.

3) The lateral accelerometer measures the acceleration along the YAW axis direction (Y5) and PITCH axis direction (Z5).The measured data is sent by the telemeter sysytem mounted on the third-stage measuring unit through the SD connector in the lower portion of the satellite.

4) The kick-motor combustion internal pressure gauge (PKM) measures the combustion internal pressure while the kick motor (4th stage) burns. The measured data is transmitted through the satellite telemetry system.

5) The vibration sensors (V6, V7, and V8) measure three axis vibration of the satellite. The measured data is sent by the telemeter system mounted on the second-stage through the SD connector.

6) The measured data of PF4 is transmitted using the satellite telemeter by switching the data transmission line from XSA-H to PF4 with the signal from PF4-INS.

7) INS-SA turns off the power supply to each detector by a command or an EAT-SA signal before the satellite is separated.
The block diagram of INS-SA is shown in Fig. 1.

3. Performance

3.1 Vertical acceleration meter (XSA)

(1)	Measuring range:	H -5~+15G L -1~+1G
(2)	Measuring accuracy (Normal temperature):	-5G 0.0±0.05V +15G 5.0±0.05V
(3)	Frequency response:	fc=32Hz -3.0±1.0dB
(4)	Output voltage:	0~+5.0V
(5)	Output impedance:	100Ω or less
(6)	Limiter voltage:	+6.2±0.15V
(7)	Temperature drift of output voltage:	-10~+50°C ±0.1V
(8)	Elapsed-time drift of output voltage:	100H ±0.05V
(9)	Detector:	Servo type acceleration detector (QA1400)
(10)	Detector sensitivity:	1.3mA/G(Nominal)

3.2 Lateral acceleration meter (Y5 and Z5)

(1)	Measuring range:	-10~+10G
(2)	Measuring accuracy (Normal temperature):	-10G 0.0±0.05V +10G 5.0±0.05V
(3)	Frequency response:	fc=140Hz -3.0±1.0dB
(4)	Output voltage:	0~+5V
(5)	Output impedance:	100Ω or less
(6)	Limiter voltage:	+6.2±0.15V
(7)	Temperature drift of output voltage:	-10~+50°C ±0.1V
(8)	Elapsed-time drift of output voltage:	100H ±0.05V
(9)	Detector:	Servo type acceleration detector (QA700)
(10)	Detector sensitivity:	1.3mA/G(Nominal)

3.3 Kick motor combustion internal pressure gauge (PKM)

(1) Measuring range: 0~+80kg/cm^3

(2) Measuring accuracy (Normal temperature):
0kg/cm^3 0.2±0.05V
80kg/cm^3 5.0±0.05V

(3) Frequency response: fc=1kHz
-3.0±1.0dB

(4) Output voltage: 0~+5.0V

(5) Output impedance: 100Ω or less

(6) Limiter voltage: +6.2±0.5V

(7) Temperature drift of output voltage:
-10~+50°C
±0.3V

(8) Elapsed-time drift of output voltage:
100H
±0.05V

(9) Detector: Semiconductor type (HEM-375-2000A)

(10) Detector sensitivity: 75mV/10V

(11) Detector internal resistance:
Input: More than 650Ω
Output: Less than 1000Ω

3.4 Vibration meter (V6, V7 and V8)

(1) Measuring range: V6 15G0-P
V7 15G0-P
V8 15G0-P

(2) Measuring accuracy (Normal temperature):
774.6±8mVrms

(3) Frequency response: 10~3000Hz
±0.5db

(4) Output voltage: 0~774.6mVrms

(5) Output impedance: 200Ω or less

(6) Calibration voltage accuracy:
774.6±8mVrms

(7) Temperature drift of output voltage:
-10~+50°C
±0.05Vrms

(8) Elapsed-time drift of output voltage:
100H
±0.05Vrms

(9) Detector: Piezoelectric electric element (224C)

(10) Detector sensitivity: 11pC/G TYP

3.5 Interface

(1) Current consumption (Max. value):
+5V less than 2mA
+12V less than 105mA
-12V less than 95mA

(2) Command items: INS1-ON
INS2-ON
INS-ALL-OFF
KM-MODE

(3) Timer items: KM-MODE

3.6 Mechanical performance

(1) Outline dimensions
INS-SA: 187±2.5×193±2.5×60±1.8 (mm)
Vertical acceleration sensor:
35.7±1.8×35.7±1.8×41.0±1.8 (mm)
Lateral acceleration sensor:
41.0±1.8×45.3±1.8×35.7±1.8 (mm)
Vibration sensor: 14.2×14.2×16.3 (mm)
Kick motor combustion internal pressure sensor:
15.875×15.875×27.46 (mm)

(2) Weight
INS-SA: 1.0±0.1kg
Vertical acceleration sensor:
0.2±0.05kg
(Cable weight 59g/m)
Lateral acceleration sensor:
0.2±0.05kg
(Cable weight 59g/m)
Vibration sensor: 0.021±0.002kg
(Cable weight 36g/m)
Kick motor combustion internal pressure sensor:
0.040±0.005kg

(3) Case material
INS-SA: A5052

(4) Case surface treatment
INS-SA: Alumite (Mounting surface)
Painted in black (Other than mounting surface)
Vertical acceleration sensor: Alumite (Contacting surface)
Lateral acceleration sensor: Alumite (Contacting surface)

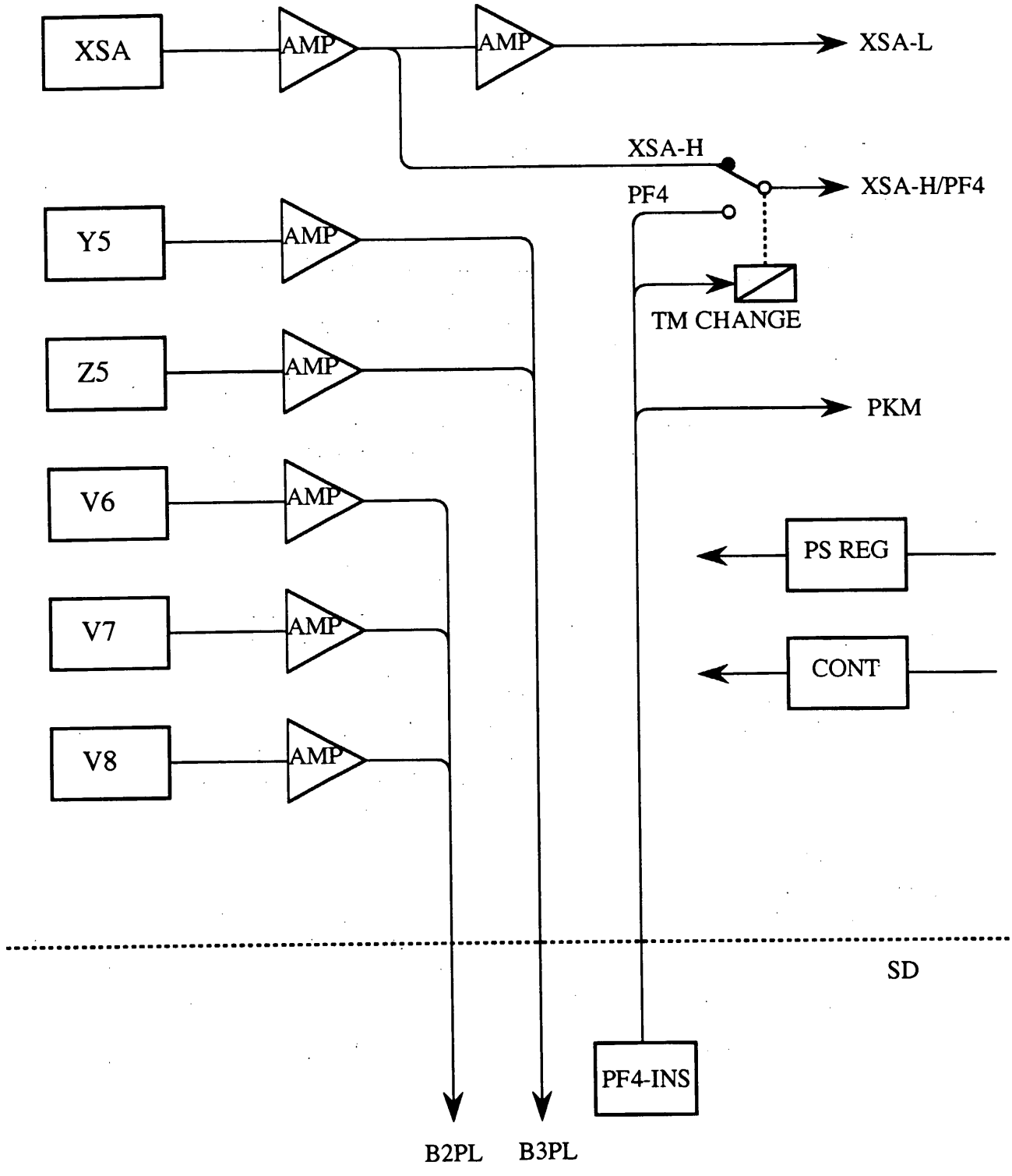

Figure 1 . Block diagram of PLANET-B INS-SA

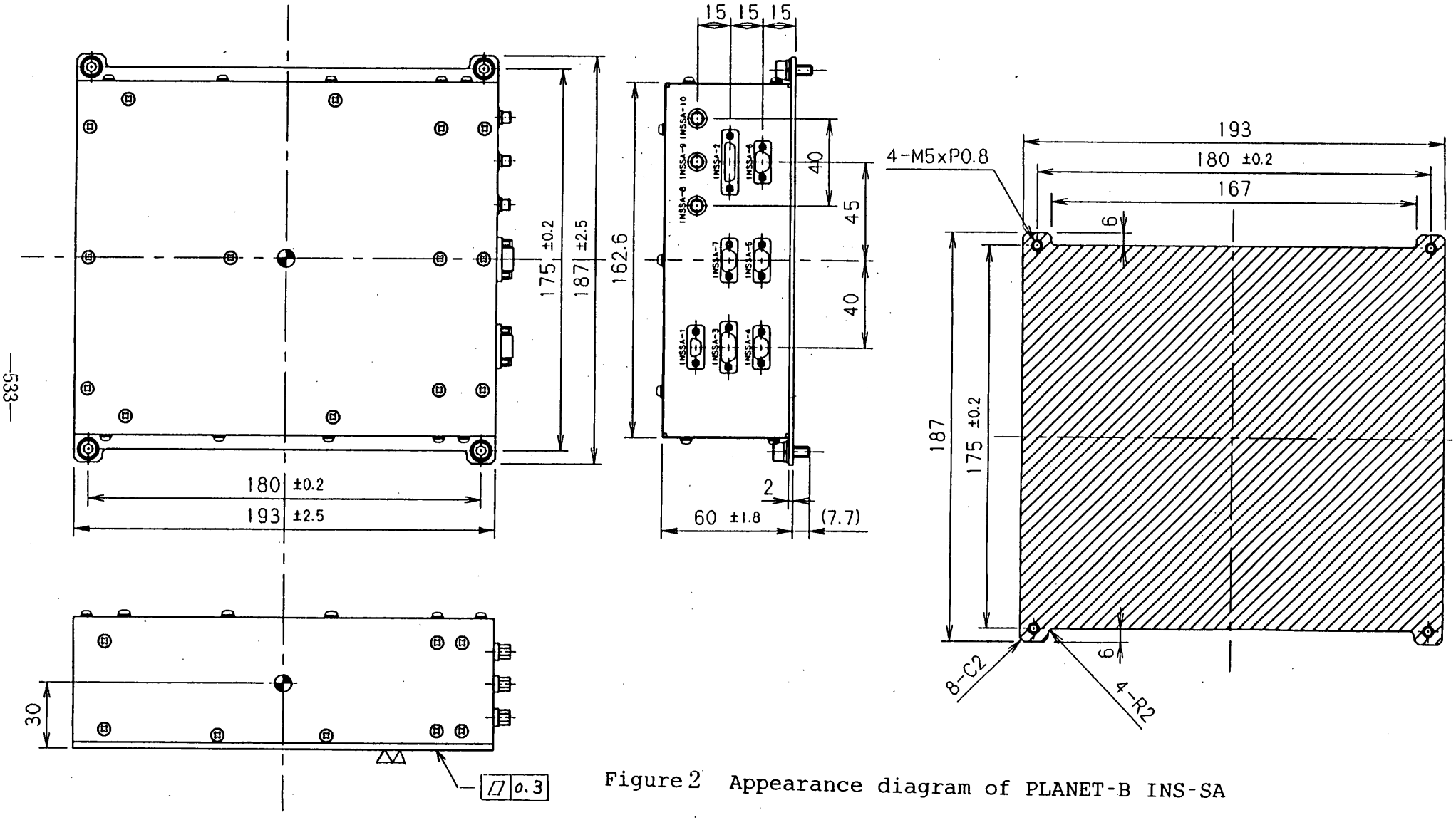

Figure 2 Appearance diagram of PLANET-B INS-SA

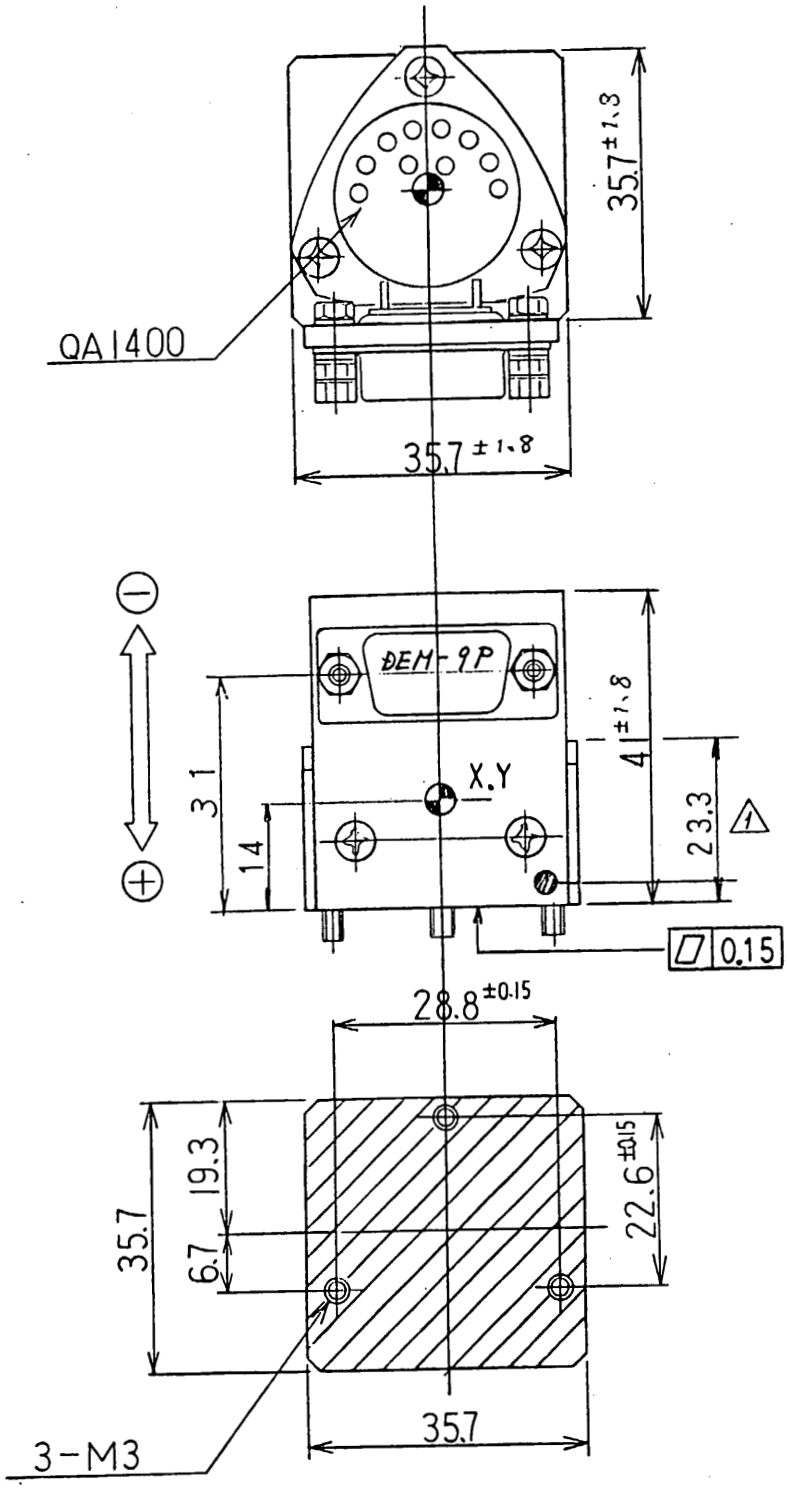

Figure 3 Appearance diagram of XSA detector

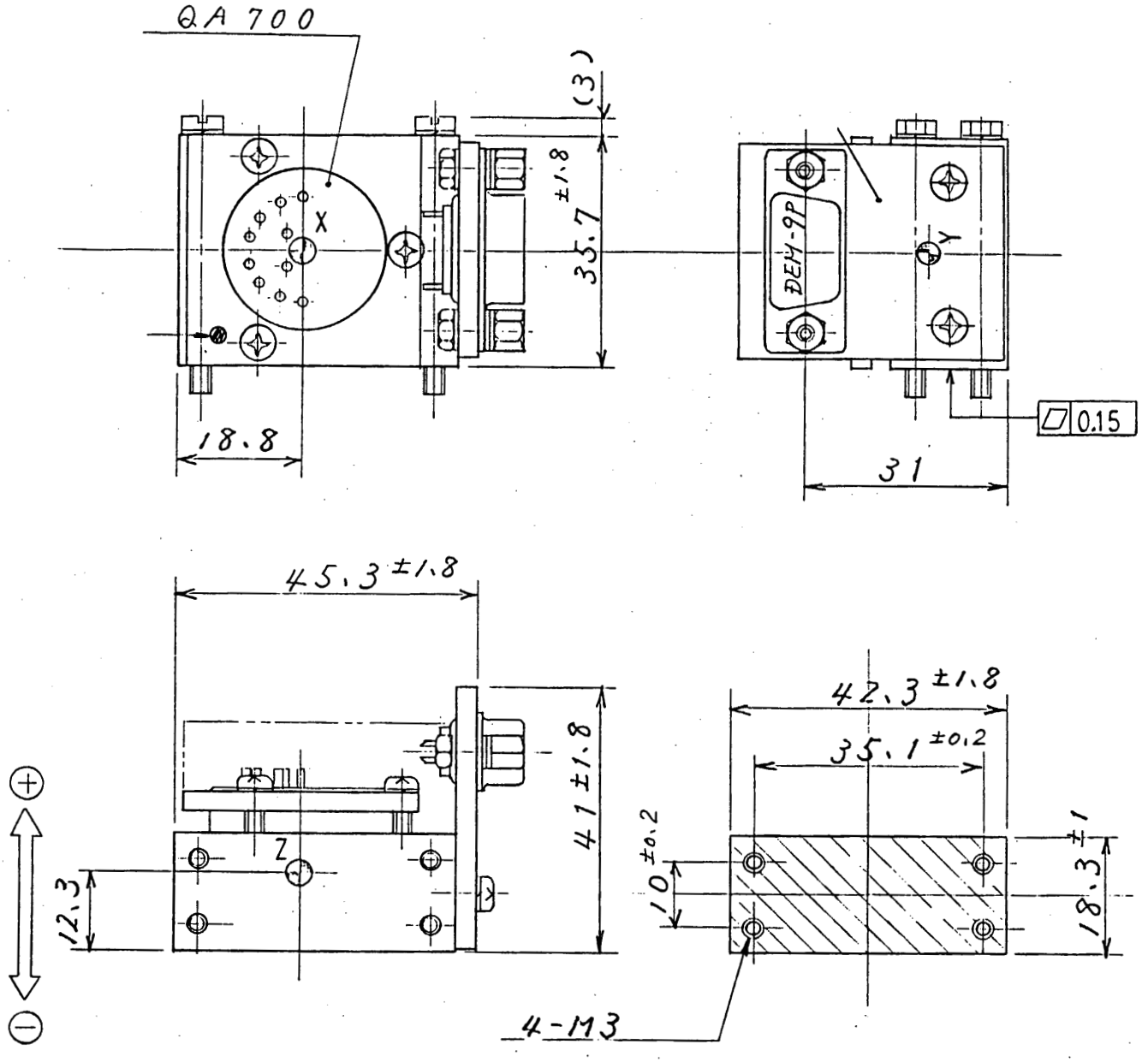

Figure 4 Appearance diagram of Y5 and Z5 detector

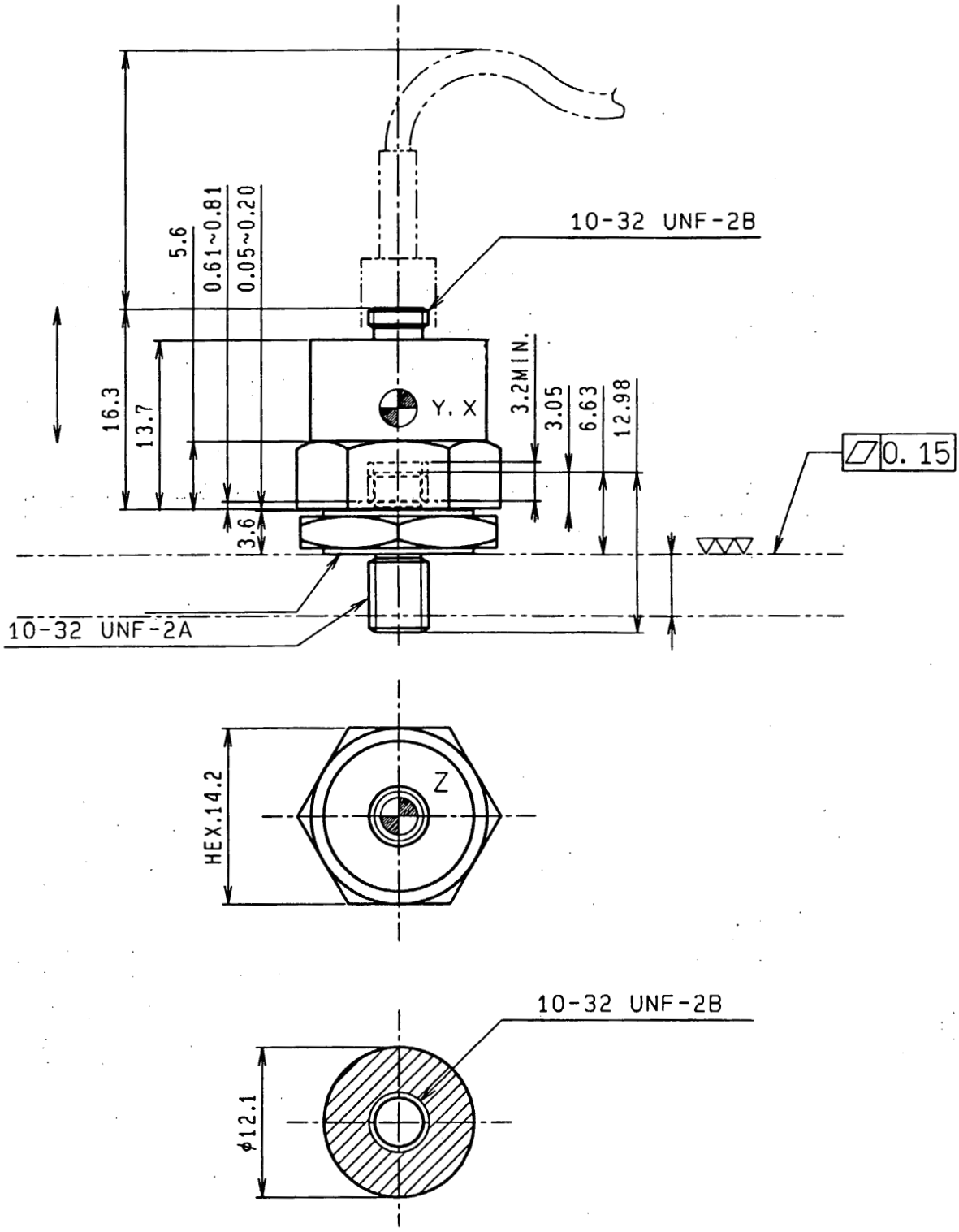

Figure 5 Appearance diagram of V6,V7 and V8 detector

11. Orbit Design

Jun'ichiro Kawaguchi, Nobuaki Ishii, Hiroshi Yamakawa ISAS
Masafumi Kimura, Tomonari Hidaka NEC
Hideya Tadokoro, Tokai Univ.

Acronyms

RCS : Reaction Control System using Hydrazine Propellant (Isp of 180 sec)
OMS : Bi-propellant Orbit Maneuver System using N2H4 and NTO (Isp of 310 sec)
LEO : Low Earth Parking Orbit
C3 : Two-body energy level defined as $C3 = v^2 - 2\mu/r$ (v:velocity, μ:gravity constant, r:distance)
M50-EQ : Earth-Mean-Equator (Equatorial Plane) of B1950 Coordinate System
M50-EC : Earth-Mean-Orbital Plane (Ecliptic Plane) of B1950 Coordinate System
MOD-EQ : Earth-Mean-Equator (Equatorial Plane) of Date Coordinate System
MOD-EC : Earth-Mean-Orbital Plane (Ecliptic Plane) of Date Coordinate System
J2000-EQ : Earth-Mean-Equator (Equatorial Plane) of J2000 Coordinate System
J2000-EC : Earth-Mean-Orbital Plane (Ecliptic Plane) of J2000 Coordinate System
Areo-EQ : Mars-True-Equator of Date Coordinate System
(X-axis: Mars autumnal equinox or Mars prime meridian)

11.1 Orbit Design Strategy (Nominal Launch Window)

Adopted sequence involves two lunar swingbys prior to the interplanetary transfer to Mars in order to accelerate the spacecraft enough to exceed Earth escape velocity, and to reduce the orbital energy required at injection from LEO by kick stage of the launch vehicle. After the injection from a low earth parking orbit, the spacecraft remains in the earth-moon gravity field for several months. During this earth orbiting period, the spacecraft takes twice gravity advantage by the close encounter with the moon to increase the orbital energy with respect to the Earth. At the final perigee passage, velocity increment (delta-V) by the bi-propellant Orbit Maneuver System (OMS) inserts the spacecraft into a Mars transfer orbit.

Since the trajectory utilize lunar gravity assists which requires precise orbit control, it strongly restricts the launch opportunity and complicates the sequence of the orbit operation. To expand the launch opportunity is a subject given the highest priority in the orbital design. The 4.5/6.5 revolution trans-lunar scheme is used which is quite robust and promising for injection error compensation and launch window expansion proved by the HITEN and GEOTAIL missions. In the following sections, outline of the PLANET-B trajectory is described.

11.2 Summary of Orbital Events (Nominal Launch Window)

This section corresponds to the nominal launch window in July and August of 1998. The PLANET-B spacecraft will be launched by M-V-#3 launch vehicle from Japanese Kagoshima Space Center (JKSC) of ISAS. PLANET-B spacecraft trajectory consists of three orbital phases;

1) Launch and earth orbiting phase (Trans-lunar and two lunar swingbys): 5 months
2) Mars transfer phase (Interplanetary Cruise): 10 months
3) Mars orbiter and scientific observation phase: 2 years

11.2.1 Launch and Earth Orbiting Phase

The spacecraft is first injected onto the LEO by M-V launch vehicle. Then it will be placed on a larger parking translunar orbit (8~11 day period) by the kick stage burn. After 4.5 (July launch window) or 6.5(August launch window) revolution around the Earth, two lunar swingbys are to be used, at each of which spacecraft passes through the trailing edge of moon's motion which yields increase in spacecraft energy with respect to the Earth. During this phase, solar perturbative gravity effect is positively utilized.

This phase requires the most complicated orbital operations, which include 1) launch and injection into a low earth parking orbit, 2) velocity correction maneuvers in highly eccentric transfer orbits to achieve the first lunar encounter, 3) precise target maneuvers in a large elliptic orbit with 1.7 million km apogee to the second lunar encounter, and 4) Earth escape kick maneuver at the final perigee to the Mars transfer orbit. Typical events and numerical results are shown in the following, based on July 3rd launch sequence.

1) Insertion into a Low Earth Parking Orbit (Third Stage Burn-out Conditions)

Launch Site	: Kagoshima Space Center (31.247 deg in geodetic latitude, 131.085 deg in longitude)
Parking Orbit	: Near Circular Orbit (perigee altitude 117 km, apogee altitude 428 km)
Epoch of Example	: 18:31:24 on July 3rd 1998 (UTC), 03:31:24 on July 4th 1998 (JST)
Insertion Point	: (168.1 km in geocentric altitude, 30.75 deg in geodetic latitude, 140.73 deg in longitude)
Insertion Velocity	: (7864 m/s, 0.99 deg in flight path angle, 96.03 deg in azimuth angle)
Coasting Angle and Time	: 15.5 minutes

2-a) Highly Eccentric Transfer Orbits to the First Lunar Encounter

Injection Date	: 18:46:54 on July 3rd, 1998 (UTC)
Injection Velocity	: 3180 m/s by the fourth stage kick motor
Apogee Distance	: 330,000 to 560,000 km
Perigee Altitude	: 600 to 1,200 km
Orbital Period	: 8~11 days
Transfer Duration	: 2.5 months (6.5 revolution around Earth for July launch)
Velocity Corrections	: 1.44 m/s (DVA1 at the first apogee on July 9th 1998) 24.54 m/s (DVP1 at the first perigee on July 14th 1998) 17.54 m/s (DVA2 at the second apogee on July 23 1998) 11.10 m/s (DVP2 at the first perigee on July 31st 1998) 0.86 m/s (DVA3 at the third apogee on August 7th 1998) 0.93 m/s (DVP3 at the third perigee on August 14th 1998) 6.95 m/s (DVA4 at the fourth apogee on August 21st 1998) 10.78 m/s (DVP4 at the fourth perigee on August 28th 1998) 2.25 m/s (DVC1 near fifth apogee on September 7th 1998)
Analytic C3	: -1.8 km2/sec2 (after DV3)

2-b) First Lunar Encounter Conditions (MOD-EC)

Swingby Date	: 11:52, on Sep. 24, 1998 (UTC)
Perilune Distance from Moon Center	: 6,453 km
B-plane angle:	:-11.664 deg
Relative Velocity at Perilune Point	: 1,523 m/s (with respect to the Moon)

3-a) Large Elliptic Orbit between the First and Second Lunar Encounter

Fifth Apogee Passage Date	: on Nov. 4, 1998 (UTC)
Fifth Apogee Distance	: 1,710,000 km
Velocity Correction	: 14.68 m/s (DVC2 at the seventh apogee on Nov. 4)
Analytic C3	: -0.46 km2/sec2 (with respect to the Earth after DVC2)

3-b) Second Lunar Encounter Conditions (MOD-EC)

Swingby Date	: 11:10, on Dec. 18, 1998 (UTC)
Perilune Distance from Moon Center	: 4,628 km
B-plane angle:	: 184.465 deg
Relative Velocity at Perilune Point	: 2,316 m/s (with respect to the Moon)

4) Final Earth Escape Kick Maneuver to Mars Transfer Orbit

Fifth Perigee Passage Date	: 11:36, on Dec. 20, 1998 (UTC)
Perigee Altitude	: 1495 km
Velocity Correction by OMS	: 436.75 m/s (OME delta-V at the seventh perigee on Dec. 20)
Analytic C3	: 0.84 and 9.83 km2/sec2 (before and after OME delta-V)

11.2.2 Mars Transfer Phase

Although only one deterministic velocity correction is scheduled in the Mars transfer phase, several maneuvers will actually be required to meet the Mars insertion conditions. They are 1) a few weeks after the earth escape, 2) at an intermediate point of the Mars transfer orbit, and 3) a few days before the Mars insertion. Total amount of the above velocity corrections is estimated 50 m/s at maximum.

1) Velocity Corrections

24.12 m/s (DVC3 on December 31 1998)

2) Heliocentric Elements of Mars Transfer Orbit (M50-EC)

Epoch	: 00:00:00 on Dec. 31, 1998 (UTC)
Semi-major Axis	: 179,506,726 km
Eccentricity	: 0.1869
Inclination	: 2.818 deg
Longitude of Ascending Node	: 87.153 deg
Argument of Perihelion	: 18.892 deg
Mean Anomaly	: 355.506 deg

11.2.3 Mars Orbiter and Scientific Observation Phase

Objectives of scientific instruments as well as the constraints due to the spacecraft operation require several kinds of orbital characteristics in orbits around Mars. Details of the orbital coordinates are discussed in section 11.4. Major characteristics are :

1) Requirements

Shadow Duration	: less than 90 minutes
Peri-apsis at Sub-solar Point	: low latitude
Mars Surface Mapping	: wide coverage
Observation Opportunities	: Phobos and Deimos
Operation Period	: more than two Earth years (one Martian year)

2) Mars Orbit Insertion Conditions (MOD-EC)

Insertion Date	: 1999/10/11 7:45:14 (UTC)
Periapsis Altitude	: 300 km
Apoapsis Distance	: 15 Mars radii (Mean Mars Radius of 3,397 km)
Orbital Period	: 38.33 hour
B-plane Angle of Incoming Asymptote	: 170 deg
Deceleration Velocity	: 1,257 m/s (for 15 minutes by OMS)

3) Mars-centered Elements of Observation Orbits around Mars (Areo-EQ)

Periapsis Altitude	: 300 km --> 150 km
Apoapsis Distance	: 15 Mars radii (Mean Mars Radius of 3,397 km)
Orbital Period	: 38.33 hours --> 38.17 hours
Ascending Node Rate	: 0.13 deg/day (x-axis: Mars autumnal equinox)
Argument of Periapsis Rate	: 0.15 deg/day (x-axis: Mars autumnal equinox)
Shadow Duration	: 66 minutes at maximum
Velocity for Periapsis Change	: 5 m/s per 100 km change
Velocity Maneuver to keep Peri-apsis Altitude in 130 +/- 30 km	: approximately 10 m/s for 500 days

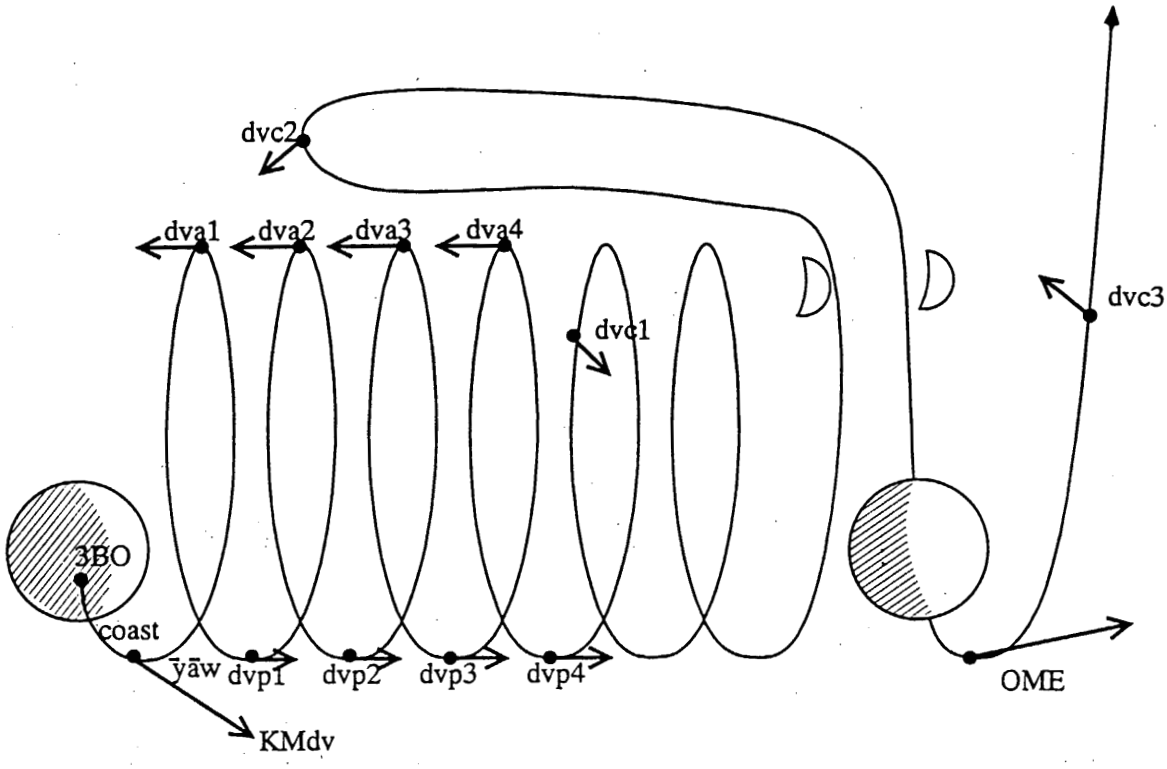

6.5 Revolution Translunar Phase Orbit
(Nominal July Launch Window)

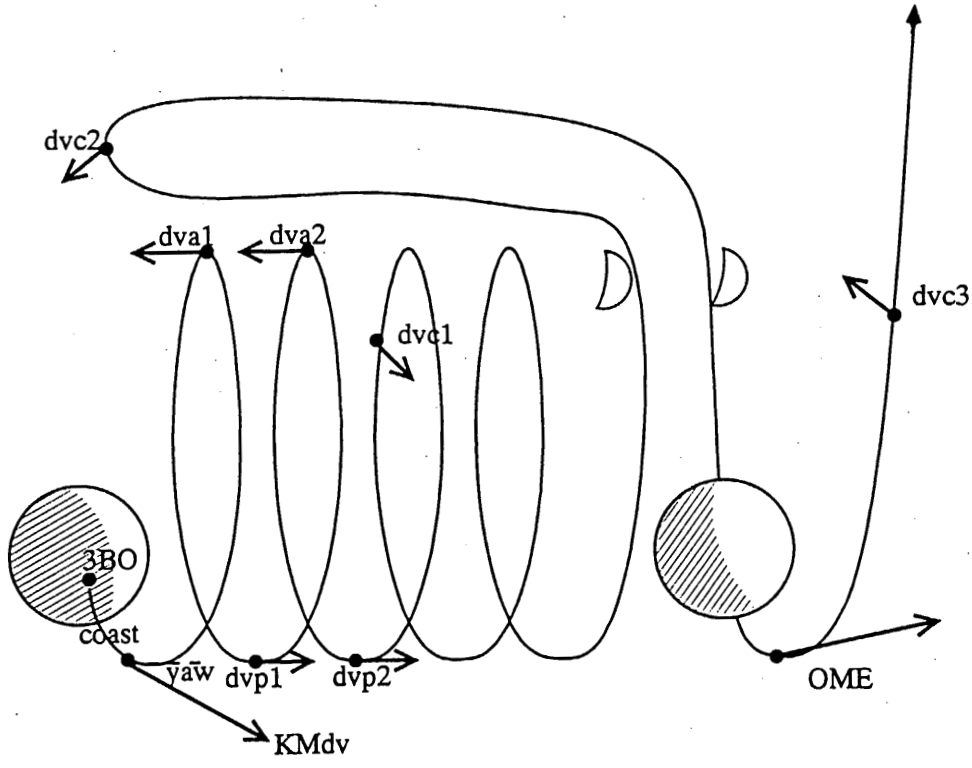

4.5 Revolution Translunar Phase Orbit
(Nominal August Launch Window)

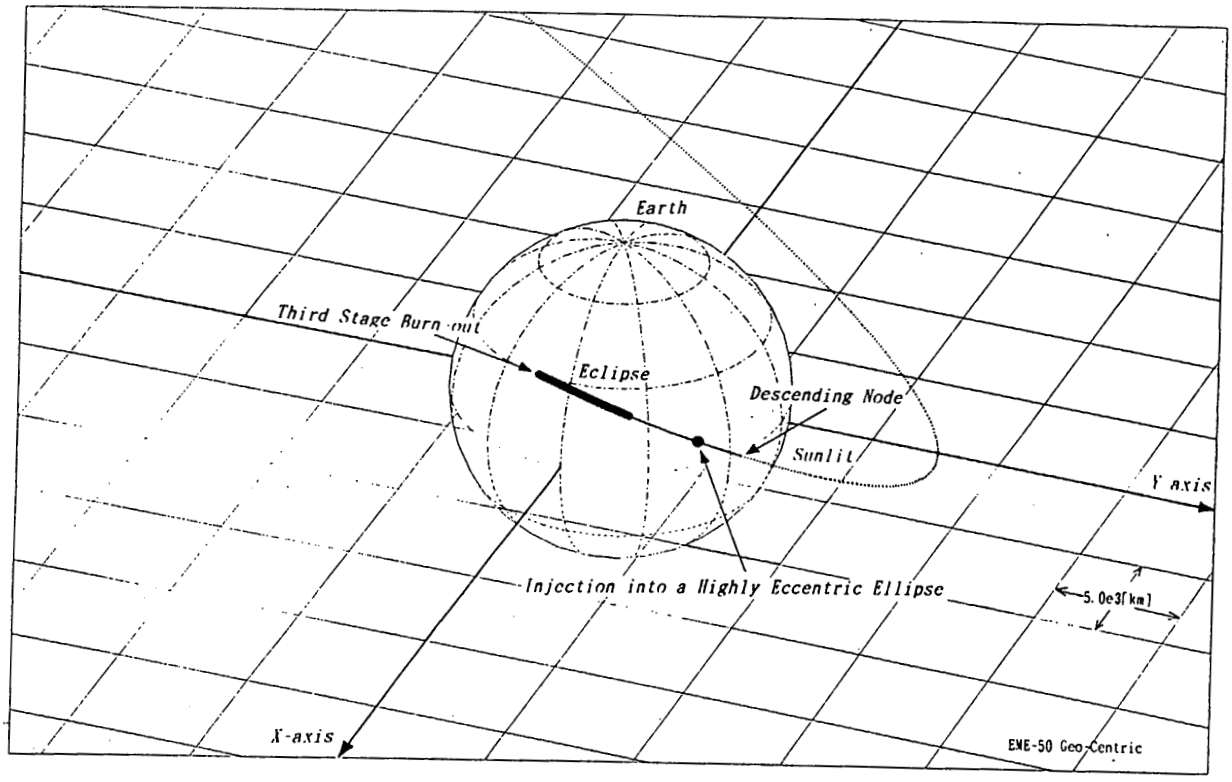

Third Stage Burn-Out and Injection into a Highly Eccentric Orbit

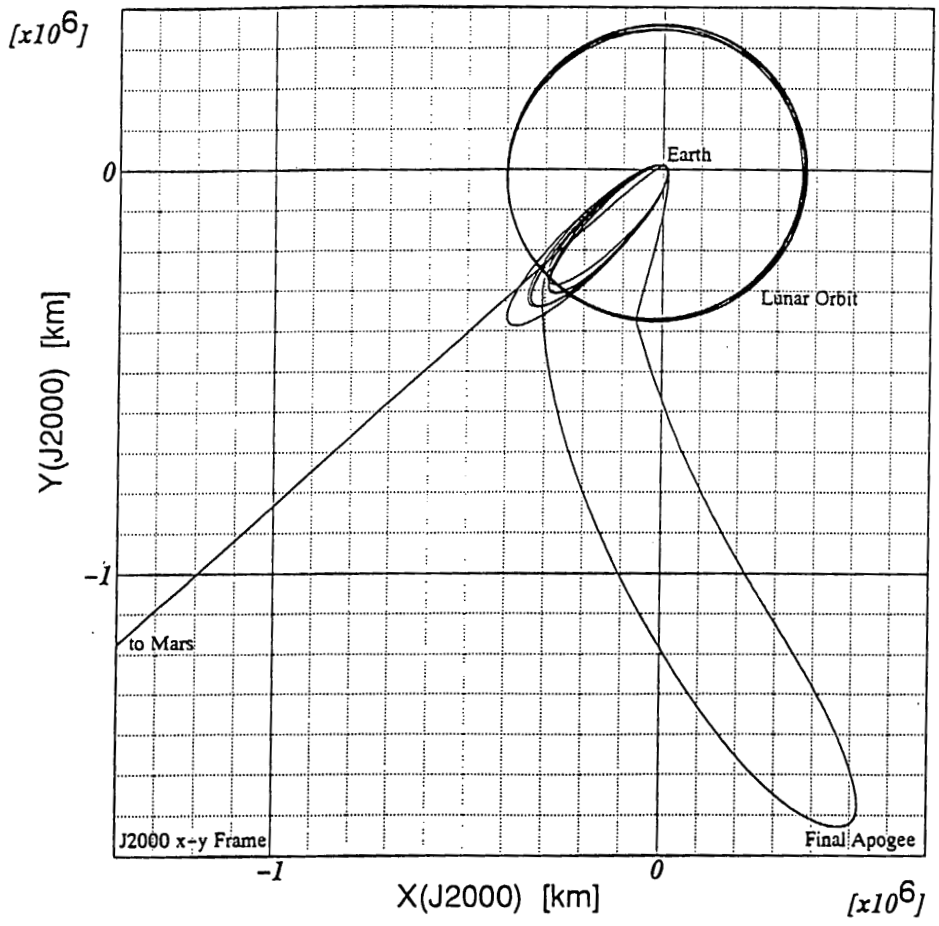

Launch and Earth Orbiting Phase (Translunar Phase)

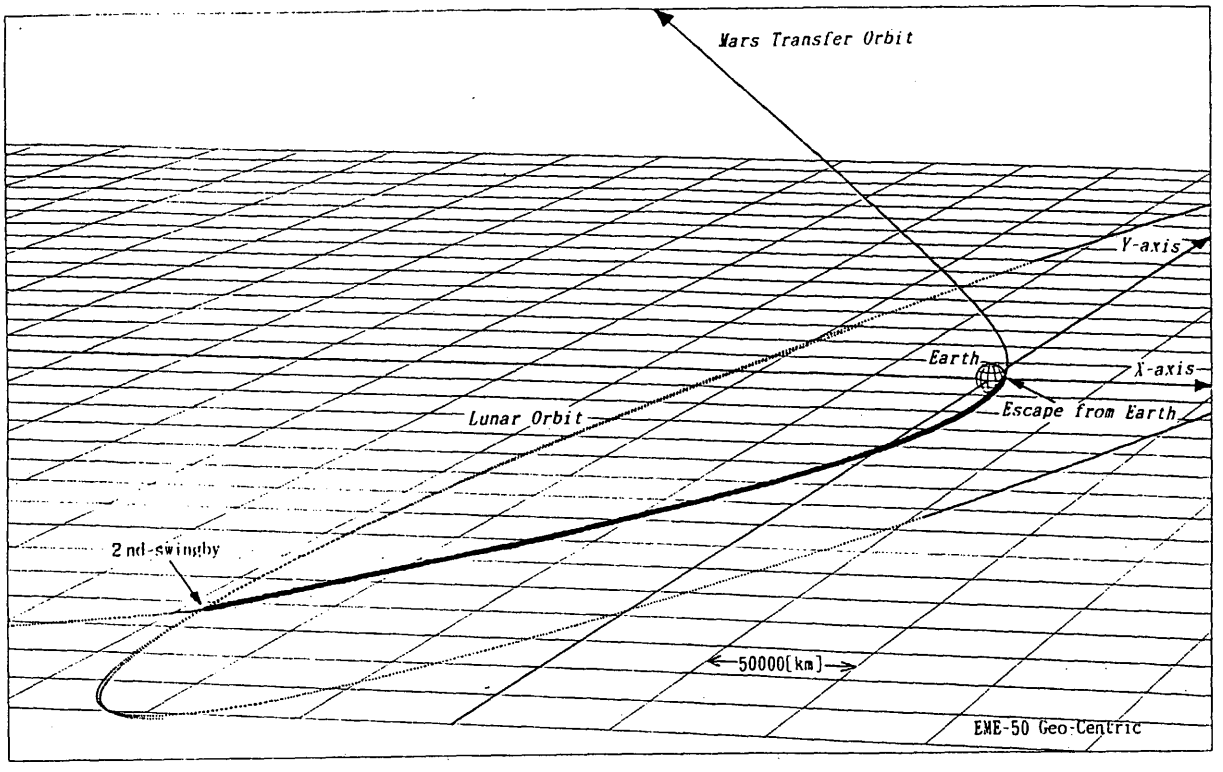

Second Lunar Encounter and Earth Escape into Mars Transfer Orbit

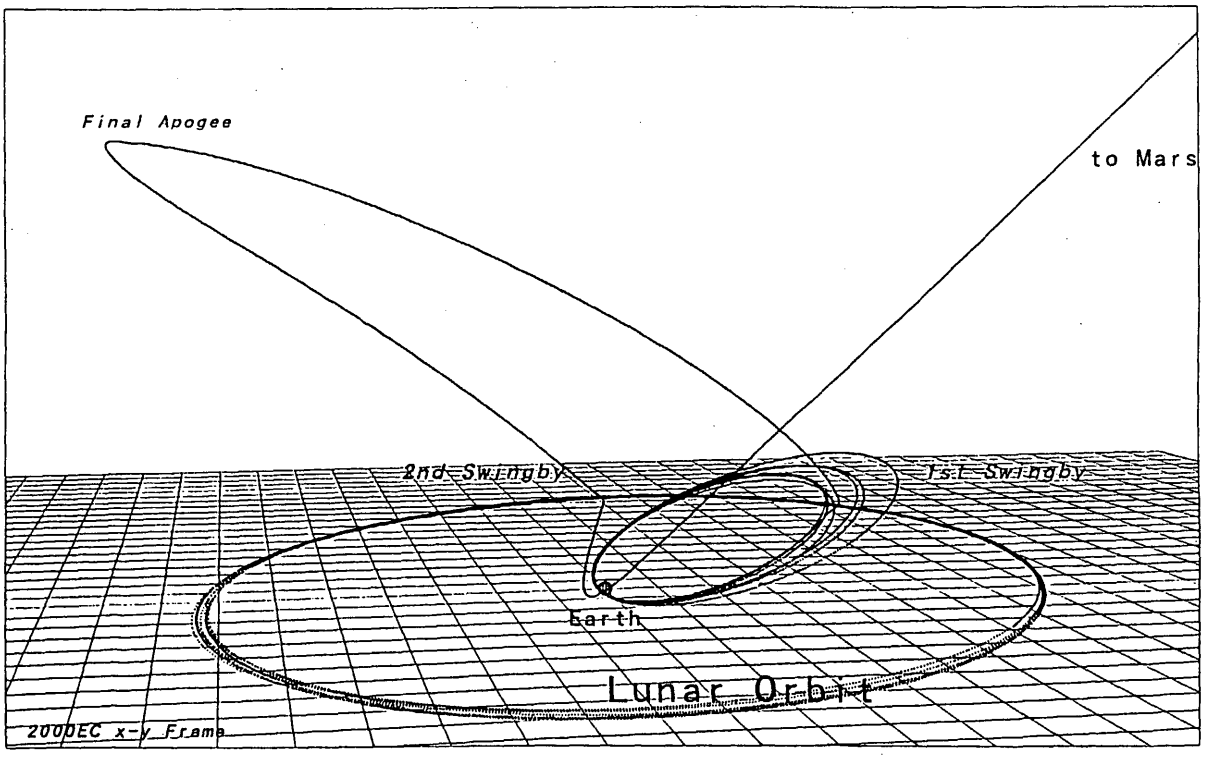

Double Lunar Swingby Orbit in Earth-Moon Gravity Field

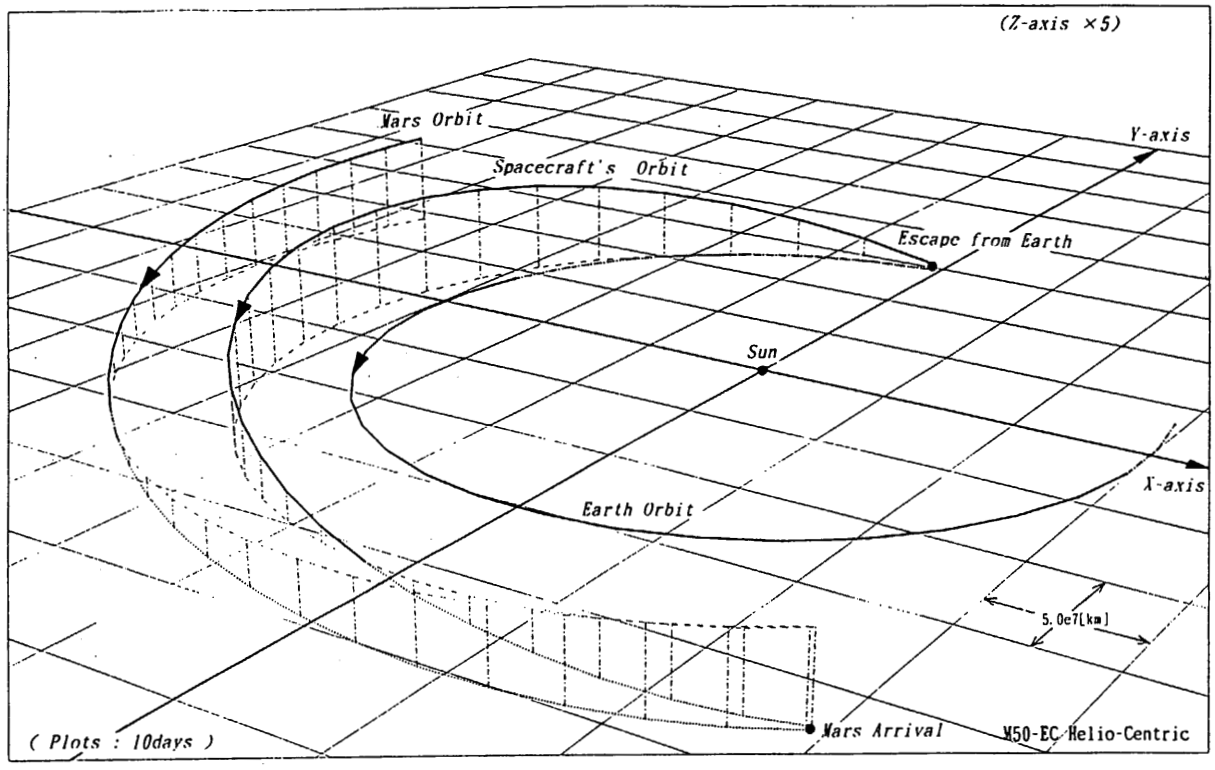

Heliocentric Mars Transfer Orbit

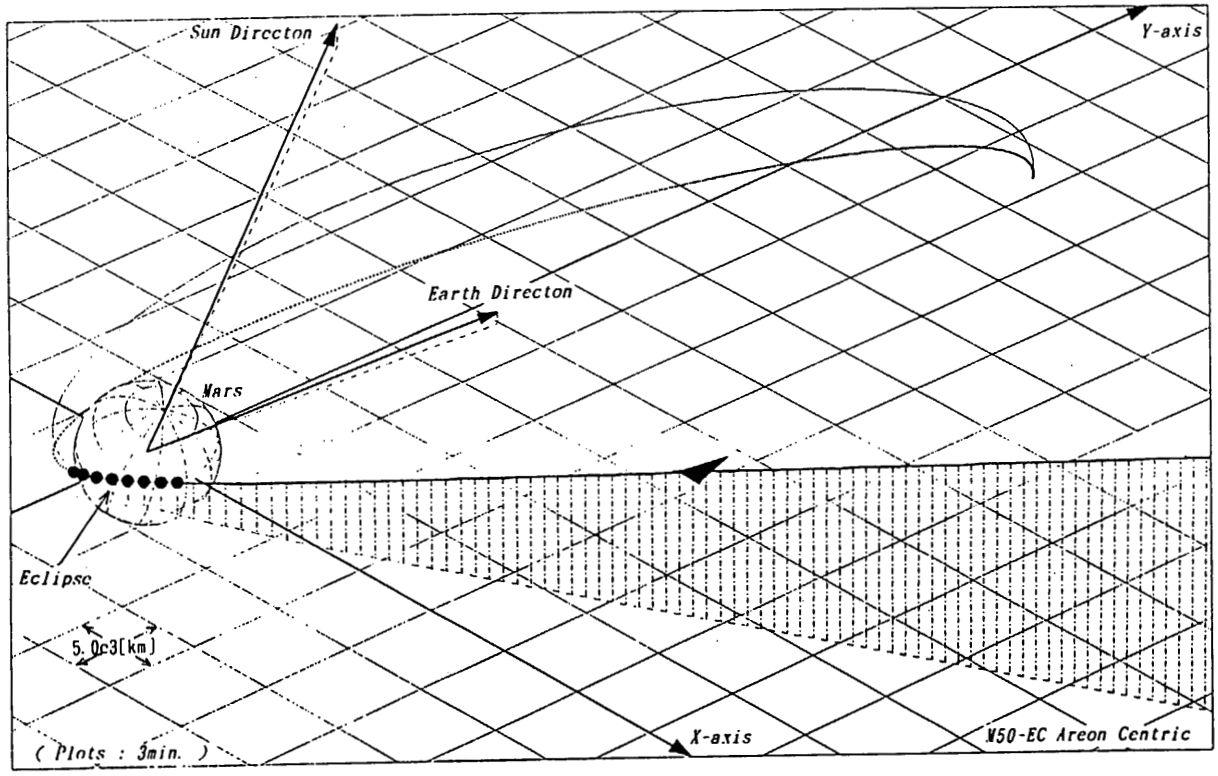

Mars Encounter and Mars Orbit Insertion

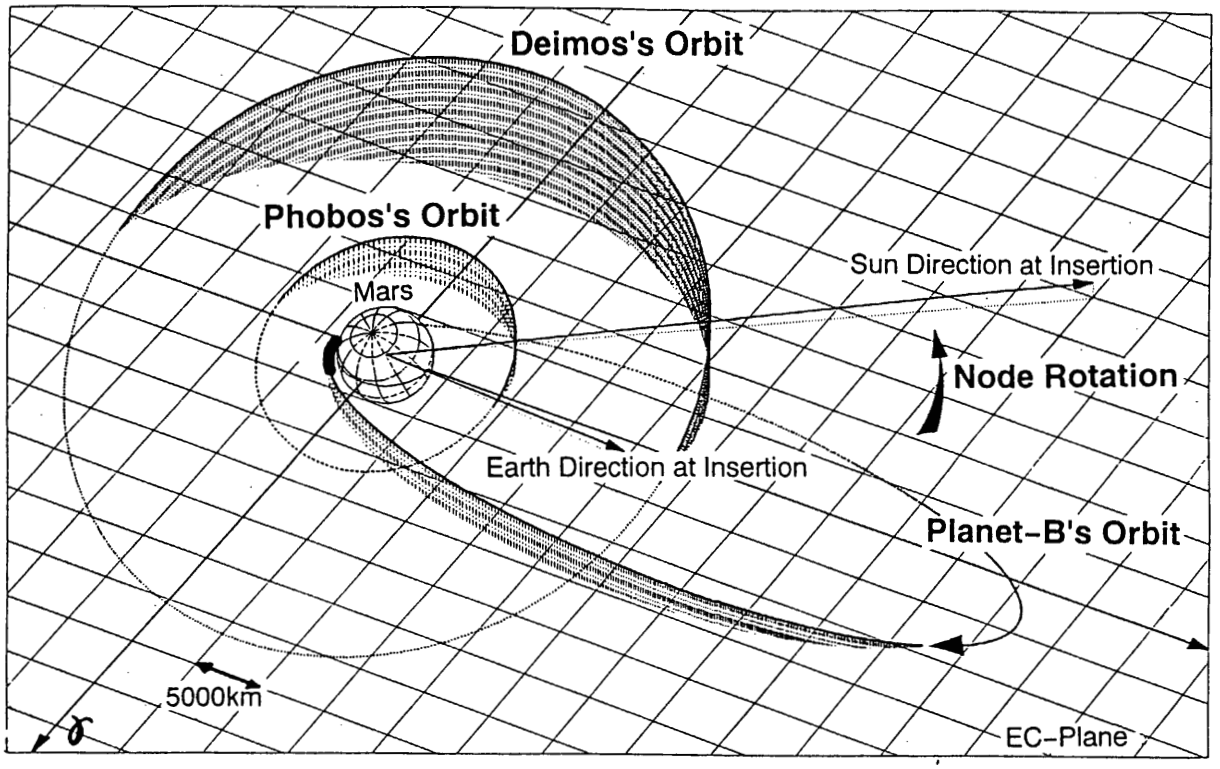

Elliptic Orbit around Mars

11.3 Nominal and Backup Launch Window

11.3.1 Launch Vehicle Capability

For PLANET-B mission, M-V-#3 is utilized as a launch vehicle. The payload mass into a low earth orbit (117 km x 428 km) amounts to 2,039 kg. The LEO payload includes the fourth stage kick motor and the spacecraft, and the mass ratio of them is determined by the velocity increment required in the injection from LEO. Relating to the above LEO capabilities, the wet spacecraft mass together with the required fuel of the spacecraft are listed.

LEO Capability:	2,039 kg (kick stage + spacecraft)
Wet Spacecraft Mass:	540 kg (target)
Required Spacecraft Fuel:	271 kg

11.3.2 Mars Mission Launch Window Analysis (Interplanetary Phase)

In the table below, launch windows for Mars are shown open every 2.1 to 2.2 years, where half revolution as well as one-and-a-half revolution ballistic heliocentric orbits are included. As for VEGA (Venus and Earth Gravity Assist) and Broken Plane strategy which avoids so-called singularity in Hohmann type transfer, they are not shown since no mass-effective windows for Mars were found until 2010. Launch window in Nov.,1996 is the best one within this century and was formerly designated as the nominal window for PLANET-B mission, which provides the largest mass capability. However, the delay of M-V launch vehicle yields shift of launch window to that in December 1998 which is less effective from payload mass capability point of view than in 1996 window. This postponement made the mass budget more tighter and some breakthrough with lunar and solar gravity assists was required for this new 1998 window as was described in the preceding sections. Another window open in Sep.,'98 requires 1.5 revolution orbit with Mars arrival in 2001, which is as nearly mass-effective as in 1996 window. This is currently a backup window. Referring to C3 in the earth departure and the Mars arrival, the departure velocity in the backup plan (2001 Mars arrival) is approximately 250 m/s larger than that in the nominal plan (1999 Mars arrival), while the arrival velocity in the backup plan is approximately 400 m/s smaller than that in the nominal plan.

Launch Windows for Mars

Assumptions
1) LEO:150km x 300km
2) M-V kick stage: Isp=300 sec (stage mass ratio=0.89),
3) spacecraft bi-propellant propulsion system: Isp=310 sec,
4) Mars orbit: 300 km altitude x 15 Mars radii (apoapsis distance)

Earth Departure	Mars Arrival	C3(km2/s2) at Earth departure	Vrel.(km/s) at Mars arrival	dry mass(%)#	wet mass(%)#	
* Sep., '96	March, '99	13.9	2.8	13.6	18.4	
Nov., '96	Sep., '97	9.0	2.9	15.1	20.7	
* Sep., '98	March, '01	12.4	2.5	14.8	19.1	Backup
Dec., '98	Oct., '99	10.2	3.4	13.4	20.2	Nominal
Apr., '01	Oct., '01	10.2	3.5	13.1	20.2	
June.,'03	Jan., '04	8.9	2.7	15.6	20.8	
Aug., '05	Sept., '06	15.9	3.2	12.1	17.6	
Sep., '07	Sept., '08	13.0	2.6	14.4	18.9	

payload ratio to LEO capability * 1.5 revolution heliocentric orbit

11.3.3 PLANET-B Nominal and Backup Launch Windows

Nominal and Backup Launch Windows Outline

	<Nominal Window>	<Backup Window>
Launch Month	July and August, 1998	August to September, 1998
Total Number of Launch Dates	8+11=19 days	21 days
Launch Window	July 3 - July 10 UTC (8 days) = July 4 - July 11 JST July 31 - August 10 UTC (11 days) = August 1 - August 11 JST	August 19-September 8 UTC (21 days) = August 19-September 8 JST
Departure from Earth	December 20, 1998	September 23, 1998
Arrival at Mars	October 11, 1999	March 5, 2001
Flight Time to Mars Arrival	15 months	31 months
C3 at Earth Departure	10.2 km2/sec2	12.4 km2/sec2
Relative Velocity at Mars Arrival	3.4 km/s	2.5 km/s
Revolution in Heliocentric Orbit	0.5	1.5
Stationary Orbit	Highly Elliptic Orbits +Lunar Swingby Orbits before Earth Departure	Highly Elliptic Orbits before Earth Departure
Lunar Swingby	Twice	None

Nominal Launch Window (July and August 1998)
Launch Time and Injection Epoch

3BO Time: launch vehicle 3rd stage burn-out (= Start of Parking Orbit)
Coast: duration from 3BO to injection (centroid of kick stage burn)
KM-Yaw: angle between kick motor delta-V direction and parking orbit plane
Injection: centroid of kick stage burn

year = 1998

Launch Time [UTC]		3BO Time [UTC]	Coast [min]	KM-Yaw [deg]	Injection [UTC]
7/ 3	18:26:00	18:31:24	15.5	11.427	18:46:54
7/ 4	18:20:00	18:25:24	15.5	12.048	18:40:54
7/ 5	18:15:00	18:20:24	15.5	11.995	18:35:54
7/ 6	18:11:00	18:16:24	15.5	11.973	18:31:54
7/ 7	18: 7:00	18:12:24	15.5	11.973	18:27:54
7/ 8	18: 3:00	18: 8:24	15.5	11.985	18:23:54
7/ 9	17:59:00	18: 4:24	15.5	12.581	18:19:54
7/10	17:55:00	18: 0:24	15.5	12.701	18:15:54
7/31	16:38:00	16:43:24	15.7	11.973	16:59:06
8/ 1	16:33:00	16:38:24	15.7	11.890	16:54:06
8/ 2	16:29:00	16:34:24	15.7	11.860	16:50:06
8/ 3	16:25:00	16:30:24	15.7	11.851	16:46:06
8/ 4	16:22:00	16:27:24	15.7	12.681	16:43:06
8/ 5	16:18:00	16:23:24	15.7	12.702	16:39:06
8/ 6	16:15:00	16:20:24	15.7	12.717	16:36:06
8/ 7	16:11:00	16:16:24	15.7	13.659	16:32:06
8/ 8	16:07:00	16:12:24	15.7	13.680	16:28:06
8/ 9	16:03:00	16: 8:24	15.7	13.699	16:24:06
8/10	15:59:00	16: 4:24	15.7	14.760	16:20:06

Nominal Launch Window (July 1998)

Apogee & Perigee Epoch and Distance / Period Allocation

Launch		injection	apo-1	peri-1	apo-2	peri-2	apo-3	peri-3	apo-4	peri-4	apo-5	peri-5	apo-6	peri-6	apo-7	peri-7
7/ 3	Distance[km]	6702	411011	8502	556448	8502	483983	7997	477356	8001	422550	7339	426372	7156	1708828	7873
	Date[UTC]	7/3 19h	7/9 6h	7/14 19h	7/23 10h	8/1 0h	8/8 0h	8/15 0h	8/21 21h	8/28 17h	9/3 10h	9/9 3h	9/14 23h	9/20 19h	11/4 6h	12/20 12h
	Period[day]		(11)		(17)		(14)		(14)		(11)		(12)		(91)	
7/ 4	Distance[km]	6702	385135	8500	556678	8501	483960	7997	477351	8001	421268	7279	425058	7092	1708813	7815
	Date[UTC]	7/4 19h	7/9 18h	7/14 18h	7/23 10h	8/1 0h	8/8 0h	8/15 0h	8/21 21h	8/28 17h	9/3 9h	9/9 2h	9/14 22h	9/20 16h	11/4 6h	12/20 11h
	Period[day]		(10)		(17)		(14)		(14)		(11)		(12)		(91)	
7/ 5	Distance[km]	6702		8503	534864	8503	483949	7997	477347	8001	420693	7311	424448	7122	1708833	7756
	Date[UTC]	7/5 19h	7/10 18h	7/15 18h	7/23 22h	8/1 0h	8/8 0h	8/15 0h	8/21 20h	8/28 17h	9/3 9h	9/9 2h	9/14 21h	9/20 15h	11/4 6h	12/20 11h
	Period[day]		(10)		(16)		(14)		(14)		(11)		(12)		(91)	
7/ 6	Distance[km]	6702	384766	8501	512454	8503	483945	7997	477341	8001	420504	7342	424238	7153	1708769	7680
	Date[UTC]	7/6 19h	7/11 18h	7/16 18h	7/24 10h	8/1 0h	8/8 0h	8/15 0h	8/21 20h	8/28 17h	9/3 9h	9/9 2h	9/14 20h	9/20 15h	11/4 6h	12/20 10h
	Period[day]		(10)		(15)		(14)		(14)		(11)		(12)		(91)	
7/ 7	Distance[km]	6702	384505	8502	489558	8502	483942	7997	477344	8001	420331	7359	424047	7169	1708848	7628
	Date[UTC]	7/7 19h	7/12 18h	7/17 18h	7/24 22h	8/1 0h	8/8 0h	8/15 0h	8/21 20h	8/28 17h	9/3 9h	9/9 1h	9/14 20h	9/20 15h	11/4 6h	12/20 10h
	Period[day]		(10)		(14)		(14)		(14)		(11)		(12)		(91)	
7/ 8	Distance[km]	6702	384291	8501	466044	8501	483939	7997	477343	8001	420149	7370	423848	7179	1708807	7567
	Date[UTC]	7/8 18h	7/13 18h	7/18 18h	7/25 9h	8/1 0h	8/8 0h	8/15 0h	8/21 20h	8/28 17h	9/3 9h	9/9 1h	9/14 20h	9/20 14h	11/4 6h	12/20 9h
	Period[day]		(10)		(13)		(14)		(14)		(11)		(12)		(91)	
7/ 9	Distance[km]	6702	330077	8497	489644	8502	483937	7997	477343	8001	420214	7338	423920	7148	1708753	7612
	Date[UTC]	7/9 18h	7/13 18h	7/17 18h	7/24 22h	8/1 0h	8/8 0h	8/15 0h	8/21 20h	8/28 17h	9/3 9h	9/9 1h	9/14 20h	9/20 14h	11/4 6h	12/20 10h
	Period[day]		(8)		(14)		(14)		(14)		(11)		(12)		(91)	
7/10	Distance[km]	6702	357461	8497	441935	8500	483931	7998	477336	8002	419970	7368	423652	7178	1708807	7537
	Date[UTC]	7/1 18h	7/15 6h	7/19 18h	7/25 21h	8/1 0h	8/8 0h	8/15 0h	8/21 20h	8/28 17h	9/3 9h	9/9 1h	9/14 20h	9/20 14h	11/4 6h	12/20 9h
	Period[day]		(9)		(12)		(14)		(14)		(11)		(12)		(91)	

Nominal Launch Window (August 1998)

Apogee & Perigee Epoch and Distance / Period Allocation

Launch		injection	apo-1	peri-1	apo-2	peri-2	apo-3	peri-3	apo-4	peri-4	apo-5	peri-5
7/31	Distance[km]	6704	386188	7050	574426	7995	421892	7361	425563	7174	1708849	7455
	Date[UTC]	7/31 17h	8/5 17h	8/10 17h	8/19 17h	8/28 17h	9/3 10h	9/9 3h	9/14 22h	9/20 17h	11/4 6h	12/20 9h
	Period[day]	<--------(10)---------><-------(18)--------><--------(11)---------><-------(12)---------><-------(91)-------->										
8/ 1	Distance[km]	6704	386221	7048	552704	8001	421396	7335	425065	7146	1708816	7380
	Date[UTC]	8/1 17h	8/6 17h	8/11 17h	8/20 5h	8/28 17h	9/3 9h	9/9 2h	9/14 22h	9/20 17h	11/4 6h	12/20 8h
	Period[day]	<--------(10)---------><-------(17)--------><--------(11)---------><-------(12)---------><-------(91)-------->										
8/ 2	Distance[km]	6704	385855	7053	530768	8001	421242	7338	424898	7149	1708820	7324
	Date[UTC]	8/2 17h	8/7 16h	8/12 17h	8/20 17h	8/28 17h	9/3 9h	9/9 2h	9/14 22h	9/20 16h	11/4 6h	12/20 8h
	Period[day]	<--------(10)---------><-------(16)--------><--------(11)---------><-------(12)---------><-------(91)-------->										
8/ 3	Distance[km]	6704	385596	7051	508203	8002	421105	7341	424746	7152	1708826	7281
	Date[UTC]	8/3 17h	8/8 16h	8/13 16h	8/21 5h	8/28 17h	9/3 9h	9/9 2h	9/14 21h	9/20 16h	11/4 6h	12/20 8h
	Period[day]	<--------(10)---------><-------(15)--------><--------(11)---------><-------(12)---------><-------(91)-------->										
8/ 4	Distance[km]	6704	358796	7049	508210	8002	421323	7348	424960	7160	1708822	7276
	Date[UTC]	8/4 17h	8/9 4h	8/13 16h	8/21 5h	8/28 17h	9/3 9h	9/9 2h	9/14 22h	9/20 16h	11/4 6h	12/20 7h
	Period[day]	<--------(9)---------><-------(15)--------><--------(11)---------><-------(12)---------><-------(91)-------->										
8/ 5	Distance[km]	6704	358426	7053	485242	8001	421239	7348	424864	7159	1708826	7254
	Date[UTC]	8/5 17h	8/1 4h	8/14 16h	8/21 17h	8/28 17h	9/3 9h	9/9 2h	9/14 22h	9/20 16h	11/4 6h	12/20 7h
	Period[day]	<--------(9)---------><-------(14)--------><--------(11)---------><-------(12)---------><-------(91)-------->										
8/ 6	Distance[km]	6704	358467	7047	461346	8001	421444	7365	425060	7177	1708826	7227
	Date[UTC]	8/6 17h	8/1 4h	8/15 16h	8/22 4h	8/28 17h	9/3 9h	9/9 2h	9/14 22h	9/20 17h	11/4 6h	12/20 7h
	Period[day]	<--------(9)---------><-------(13)--------><--------(11)---------><-------(12)---------><-------(91)-------->										
8/ 7	Distance[km]	6704	330754	7048	461430	8000	421456	7361	425074	7173	1708796	7256
	Date[UTC]	8/7 17h	8/1 16h	8/15 16h	8/22 4h	8/28 17h	9/3 9h	9/9 2h	9/14 22h	9/20 17h	11/4 6h	12/20 7h
	Period[day]	<--------(8)---------><-------(13)--------><--------(11)---------><-------(12)---------><-------(91)-------->										
8/ 8	Distance[km]	6704	330593	7050	437134	8004	421347	7361	424959	7172	1708805	7257
	Date[UTC]	8/8 16h	8/1 16h	8/16 16h	8/22 16h	8/28 17h	9/3 9h	9/9 2h	9/14 22h	9/20 16h	11/4 6h	12/20 7h
	Period[day]	<--------(8)---------><-------(12)--------><--------(11)---------><-------(12)---------><-------(91)-------->										
8/ 9	Distance[km]	6704	330553	7050	412076	8002	421215	7352	424821	7163	1708830	7263
	Date[UTC]	8/9 16h	8/1 16h	8/17 16h	8/23 4h	8/28 17h	9/3 9h	9/9 2h	9/14 21h	9/20 16h	11/4 6h	12/20 7h
	Period[day]	<--------(8)---------><-------(11)--------><--------(11)---------><-------(12)---------><-------(91)-------->										
8/10	Distance[km]	6704	301771	7049	412169	8002	421253	7350	424866	7161	1708838	7299
	Date[UTC]	8/10 16h	8/1 4h	8/17 16h	8/23 4h	8/28 17h	9/3 9h	9/9 2h	9/14 22h	9/20 16h	11/4 6h	12/20 8h
	Period[day]	<--------(7)---------><-------(11)--------><--------(11)---------><-------(12)---------><-------(91)-------->										

Nominal Launch Window (July 1998)
Delta-V, Epoch and Distance

Launch	DV Name	dva1	dvp1	dva2	dvp2	dva3	dvp3	dva4	dvp4	dvc1	dvc2	OME	dvc3	Sum(DV)
7/3	DV[m/s]	1.44	24.54	17.54	11.10	0.86	0.93	6.95	10.78	2.25	14.68	436.75	24.12	551.94
	Date[UTC]	7/9 6h	7/14 18h	7/23 10h	7/31 24h	8/7 23h	8/14 23h	8/21 20h	8/28 16h	9/7 1h	11/4 6h	12/2 11h	12/3 11h	
	Distance[km]	411012	8503	556449	8502	483983	7998	477356	8001	303175	1708828	7873	3124121	
7/4	DV[m/s]	11.46	31.17	15.96	11.05	0.03	0.91	8.23	10.95	4.60	12.20	435.69	20.54	562.79
	Date[UTC]	7/9 18h	7/14 18h	7/23 10h	7/31 24h	8/7 23h	8/14 23h	8/21 20h	8/28 16h	9/7 1h	11/4 6h	12/2 11h	12/3 11h	
	Distance[km]	385136	8501	556679	8501	483961	7998	477351	8001	299273	1708813	7816	3128421	
7/5	DV[m/s]	19.44	28.57	13.40	7.99	0.01	0.90	8.68	11.03	9.15	10.78	434.17	17.32	561.44
	Date[UTC]	7/10 17h	7/15 18h	7/23 21h	7/31 24h	8/7 23h	8/14 23h	8/21 20h	8/28 16h	9/7 1h	11/4 6h	12/2 10h	12/3 11h	
	Distance[km]	384946	8503	534865	8503	483950	7998	477347	8001	297505	1708833	7756	3132574	
7/6	DV[m/s]	23.92	25.66	10.82	4.59	0.12	0.90	8.80	11.06	11.31	9.78	431.96	13.33	552.25
	Date[UTC]	7/11 17h	7/16 18h	7/24 9h	7/31 24h	8/7 23h	8/14 23h	8/21 20h	8/28 16h	9/7 1h	11/4 6h	12/2 10h	12/3 11h	
	Distance[km]	384767	8501	512454	8503	483945	7998	477342	8002	296907	1708770	7681	3137635	
7/7	DV[m/s]	26.24	22.43	7.93	0.82	0.20	0.90	8.94	11.09	12.63	8.93	430.46	10.47	541.04
	Date[UTC]	7/12 17h	7/17 18h	7/24 21h	7/31 24h	8/7 23h	8/14 23h	8/21 20h	8/28 16h	9/7 1h	11/4 6h	12/2 9h	12/3 11h	
	Distance[km]	384506	8502	489558	8502	483943	7998	477344	8001	296386	1708849	7628	3141173	
7/8	DV[m/s]	26.89	18.69	4.66	3.43	0.21	0.90	9.10	11.12	13.51	8.31	428.67	7.13	532.62
	Date[UTC]	7/13 17h	7/18 18h	7/25 9h	7/31 24h	8/7 23h	8/14 23h	8/21 20h	8/28 16h	9/7 1h	11/4 6h	12/2 9h	12/3 11h	
	Distance[km]	384292	8501	466044	8501	483940	7998	477344	8001	295830	1708807	7568	3145271	
7/9	DV[m/s]	30.74	39.43	7.78	0.82	0.006	0.90	9.13	11.10	11.41	8.82	430.01	9.55	559.696
	Date[UTC]	7/13 17h	7/17 18h	7/24 21h	7/31 24h	8/7 23h	8/14 23h	8/21 20h	8/28 16h	9/7 0h	11/4 6h	12/20 9h	12/31 1h	
	Distance[km]	330077	8498	489644	8502	483938	7998	477343	8002	300005	1708754	7612	3142292	
7/10	DV[m/s]	27.47	22.00	1.07	8.25	0.12	0.89	9.31	11.14	13.47	7.95	427.85	5.44	534.96
	Date[UTC]	7/15 5h	7/19 18h	7/25 21h	7/31 24h	8/7 23h	8/14 23h	8/21 20h	8/28 16h	9/7 0h	11/4 6h	12/20 9h	12/31 1h	
	Distance[km]	357462	8498	441936	8501	483931	7998	477336	8002	300003	1708807	7538	3147311	

Nominal Launch Window (August 1998)
Delta-V, Epoch and Distance

Launch	DV Name	dva1	dvp1	dva2	dvp2	dvc1	dvc2	OME	dvc3	Sum(DV)
7/31	DV[m/s]	6.93	30.06	13.90	25.11	3.71	8.70	424.37	1.85	514.63
	Date[UTC]	8/5 16h	8/10 16h	8/19 17h	8/28 16h	9/7 1h	11/4 5h	12/2 8h	12/3 11h	
	Distance[km]	386188	7051	574426	7996	301165	1708850	7456	3152112	
8/1	DV[m/s]	3.53	27.76	14.49	22.42	0.39	8.00	422.30	3.61	502.50
	Date[UTC]	8/6 16h	8/11 16h	8/20 5h	8/28 16h	9/7 1h	11/4 5h	12/2 8h	12/3 11h	
	Distance[km]	386222	7048	552705	8002	299669	1708816	7381	3157268	
8/2	DV[m/s]	9.62	25.40	15.18	19.42	1.84	7.84	420.61	6.81	506.72
	Date[UTC]	8/7 16h	8/12 16h	8/20 16h	8/28 16h	9/7 1h	11/4 5h	12/2 7h	12/3 11h	
	Distance[km]	385855	7053	530768	8001	299254	1708821	7324	3161072	
8/3	DV[m/s]	13.00	22.71	16.47	16.06	2.47	7.84	419.33	9.37	507.25
	Date[UTC]	8/8 16h	8/13 16h	8/21 4h	8/28 16h	9/7 1h	11/4 5h	12/2 7h	12/3 11h	
	Distance[km]	385596	7051	508204	8002	298840	1708827	7281	3164000	
8/4	DV[m/s]	13.55	29.77	16.32	16.03	0.55	7.94	419.06	9.60	512.82
	Date[UTC]	8/9 4h	8/13 16h	8/21 4h	8/28 16h	9/7 1h	11/4 5h	12/2 7h	12/3 11h	
	Distance[km]	358796	7050	508210	8002	299512	1708823	7276	3164237	
8/5	DV[m/s]	14.24	26.75	18.03	12.30	0.43	7.97	418.41	10.91	509.04
	Date[UTC]	8/10 4h	8/14 16h	8/21 16h	8/28 16h	9/7 1h	11/4 5h	12/2 7h	12/3 11h	
	Distance[km]	358427	7054	485243	8002	299261	1708826	7255	3165723	
8/6	DV[m/s]	13.58	23.07	20.10	8.00	0.66	8.15	417.47	12.45	503.48
	Date[UTC]	8/11 4h	8/15 16h	8/22 4h	8/28 16h	9/7 1h	11/4 5h	12/2 7h	12/3 11h	
	Distance[km]	358467	7048	461347	8001	299885	1708827	7228	3167410	
8/7	DV[m/s]	12.53	31.56	20.08	8.01	1.76	8.09	418.36	10.69	511.08
	Date[UTC]	8/11 16h	8/15 16h	8/22 4h	8/28 16h	9/7 1h	11/4 5h	12/2 7h	12/3 11h	
	Distance[km]	330754	7049	461431	8001	299923	1708797	7257	3165470	
8/8	DV[m/s]	10.86	27.39	22.85	3.22	1.87	8.03	418.45	10.70	503.37
	Date[UTC]	8/12 16h	8/16 16h	8/22 16h	8/28 16h	9/7 1h	11/4 5h	12/20 7h	12/31 1h	
	Distance[km]	330593	7051	437134	8005	299993	1708805	7258	3165468	
8/9	DV[m/s]	8.71	22.43	26.01	2.28	1.98	7.92	418.71	10.40	498.44
	Date[UTC]	8/13 16h	8/17 16h	8/23 4h	8/28 16h	9/7 1h	11/4 5h	12/20 7h	12/31 1h	
	Distance[km]	330554	7050	412076	8003	299996	1708831	7263	3165145	
8/10	DV[m/s]	7.67	32.88	26.01	2.27	2.50	7.84	419.84	8.23	507.24
	Date[UTC]	8/14 4h	8/17 16h	8/23 4h	8/28 16h	9/7 1h	11/4 5h	12/20 7h	12/31 1h	
	Distance[km]	301771	7050	412169	8003	300008	1708838	7300	3162719	

Nominal Launch Window (July & August 1998)
1st and 2nd Swingby Conditions

Distance: perilune distance
Theta: target plane angle (Mean-Of-Date Ecliptic)
Vrat: perilune velocity

	1st Lunar Swingby				2nd Lunar Swingby			
Launch	Date [UTC]	Distance [km]	Theta [deg]	Vrat [km/s]	Date [UTC]	Distance [km]	Theta [deg]	Vrat [km/s]
7/ 3	9/24 11:52	6452.647	-11.664	1.5228	12/18 11:10	4628.370	184.465	2.3163
7/ 4	9/24 9:58	6351.716	-13.653	1.5306	12/18 10:38	4641.500	186.565	2.3123
7/ 5	9/24 9:14	6293.877	-14.480	1.5361	12/18 10:11	4634.820	187.636	2.3121
7/ 6	9/24 9: 4	6260.409	-14.873	1.5401	12/18 9:40	4616.632	188.257	2.3140
7/ 7	9/24 8:54	6228.174	-15.261	1.5440	12/18 9:18	4603.264	188.832	2.3153
7/ 8	9/24 8:42	6198.415	-15.629	1.5475	12/18 8:53	4588.388	189.350	2.3168
7/ 9	9/24 8:42	6217.675	-15.439	1.5449	12/18 9:11	4601.742	189.003	2.3153
7/10	9/24 8:28	6175.245	-15.938	1.5500	12/18 8:40	4582.647	189.739	2.3171
7/31	9/24 11:15	6269.796	-14.287	1.5454	12/18 8:19	4526.463	188.227	2.3276
8/ 1	9/24 10:34	6212.572	-15.181	1.5513	12/18 7:45	4514.193	189.264	2.3281
8/ 2	9/24 10:26	6182.017	-15.568	1.5551	12/18 7:21	4500.196	189.789	2.3295
8/ 3	9/24 10:17	6156.853	-15.889	1.5581	12/18 7: 2	4489.808	190.216	2.3305
8/ 4	9/24 10:36	6170.024	-15.665	1.5573	12/18 7: 2	4484.841	190.005	2.3316
8/ 5	9/24 10:30	6155.970	-15.848	1.5589	12/18 6:52	4479.893	190.238	2.3320
8/ 6	9/24 10:50	6160.644	-15.716	1.5593	12/18 6:43	4468.790	190.176	2.3338
8/ 7	9/24 10:49	6173.333	-15.564	1.5574	12/18 6:55	4477.127	189.949	2.3328
8/ 8	9/24 10:39	6165.386	-15.693	1.5580	12/18 6:54	4479.216	190.081	2.3323
8/ 9	9/24 10:27	6156.058	-15.843	1.5587	12/18 6:56	4482.998	190.223	2.3315
8/10	9/24 10:28	6171.072	-15.661	1.5567	12/18 7:11	4492.844	189.961	2.3304

Nominal Launch Window (July & August 1998)
Mars Orbit Insertion (tentative plan)

Distance: perilune distance
Theta: target plane angle (Mean-Of-Date Ecliptic)
Vrat: perilune velocity
* Theta is tentatively set at 180 deg which is not nominal.
(see Section 11.4 for nominal value and more detailed info.)

Launch	Date [UTC]	Distance [km]	Theta [deg]	Vrat [km/s]
7/ 3	10/11 7:45	3397.000	180.000	5.9268
7/ 4	10/11 8:09	3397.001	180.000	5.9266
7/ 5	10/11 8:35	3397.005	180.000	5.9261
7/ 6	10/11 9:03	3397.002	180.000	5.9261
7/ 7	10/11 9:22	3397.001	180.000	5.9260
7/ 8	10/11 9:44	3397.003	180.000	5.9265
7/ 9	10/11 9:28	3397.002	180.000	5.9256
7/10	10/11 9:55	3397.003	180.000	5.9259
7/31	10/11 10:19	3397.003	180.000	5.9262
8/ 1	10/11 10:47	3397.002	180.000	5.9265
8/ 2	10/11 11:16	3397.002	180.000	5.9268
8/ 3	10/11 11:37	3397.003	180.000	5.9270
8/ 4	10/11 11:39	3396.999	180.000	5.9270
8/ 5	10/11 11:51	3397.002	180.000	5.9271
8/ 6	10/11 12:03	3397.003	180.000	5.9272
8/ 7	10/11 11:49	3397.000	180.000	5.9271
8/ 8	10/11 11:49	3396.999	180.000	5.9271
8/ 9	10/11 11:46	3397.001	180.000	5.9271
8/10	10/11 11:29	3397.000	180.000	5.9269

Backup Launch Window (August-September 1998)

Launch Epoch / Injection epoch
Shadow information during and after parking orbit

lift-off(UTC)						B3-BO(UTC)			KM-IG(UTC)			sunlit	shadow	shadow
year	mo	day	hr	min	sec	hr	min	sec	hr	min	sec	(before & after KM IG)		(min)
1998	8	19	4	46	49 /	4	52	13 /	5	26	0 /	18	16	12
1998	8	20	4	42	49 /	4	48	13 /	5	22	0			
1998	8	21	4	38	49 /	4	44	13 /	5	18	0			
1998	8	22	4	34	49 /	4	40	13 /	5	14	0			
1998	8	23	4	30	49 /	4	36	13 /	5	10	0			
1998	8	24	4	26	49 /	4	32	13 /	5	6	0			
1998	8	25	4	22	49 /	4	28	13 /	5	2	0			
1998	8	26	4	18	49 /	4	24	13 /	4	58	0			
1998	8	27	4	14	49 /	4	20	13 /	4	54	0			
1998	8	28	4	10	49 /	4	16	13 /	4	50	0			
1998	8	29	4	6	49 /	4	12	13 /	4	46	0			
1998	8	30	4	2	49 /	4	8	13 /	4	42	0 /	21	13	13
1998	8	31	3	58	49 /	4	4	13 /	4	38	0			
1998	9	1	3	54	49 /	4	0	13 /	4	34	0			
1998	9	2	3	50	49 /	3	56	13 /	4	30	0			
1998	9	3	3	46	49 /	3	52	13 /	4	26	0			
1998	9	4	3	42	49 /	3	48	13 /	4	22	0			
1998	9	5	3	38	49 /	3	44	13 /	4	18	0			
1998	9	6	3	34	49 /	3	40	13 /	4	14	0			
1998	9	7	3	30	49 /	3	36	13 /	4	10	0			
1998	9	8	3	26	49 /	3	32	13 /	4	6	0 /	23	11	15

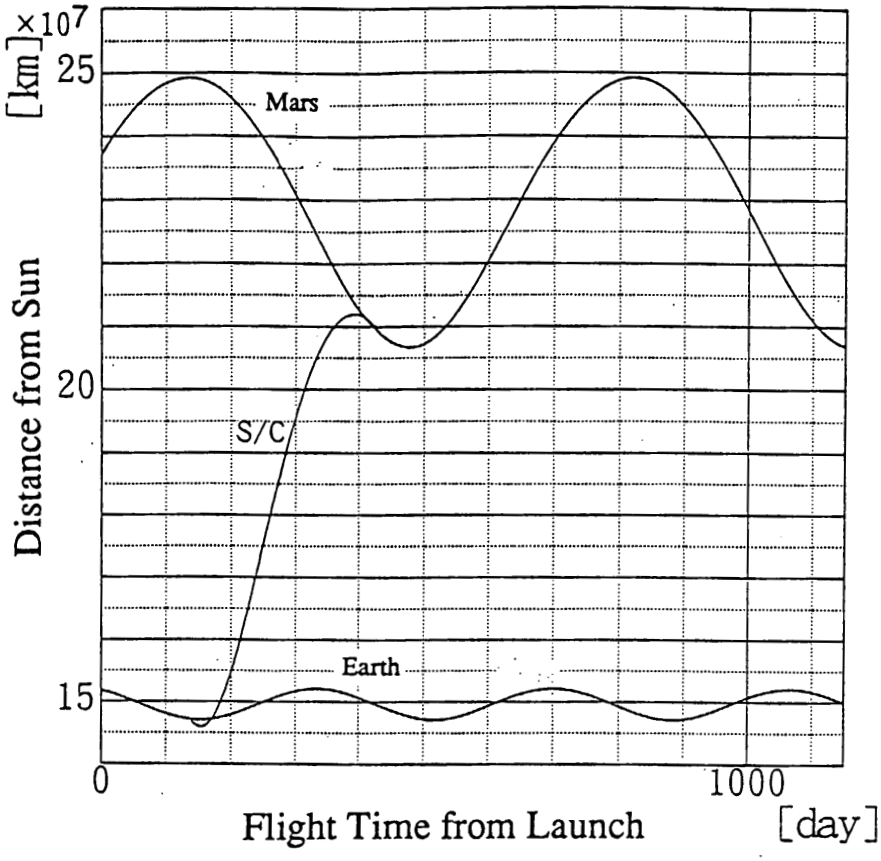

Distance Info (Nominal Launch Window, Mars arrival:1999)

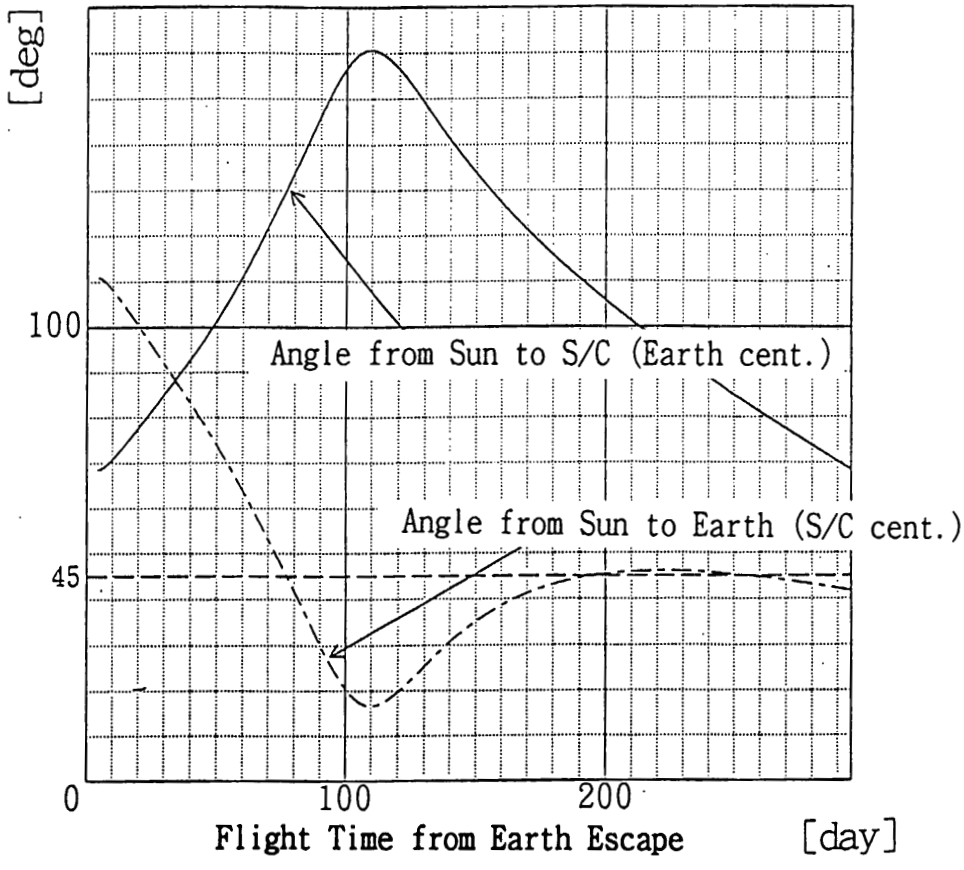

Angle Info (Nominal Launch Window, Mars arrival:1999)

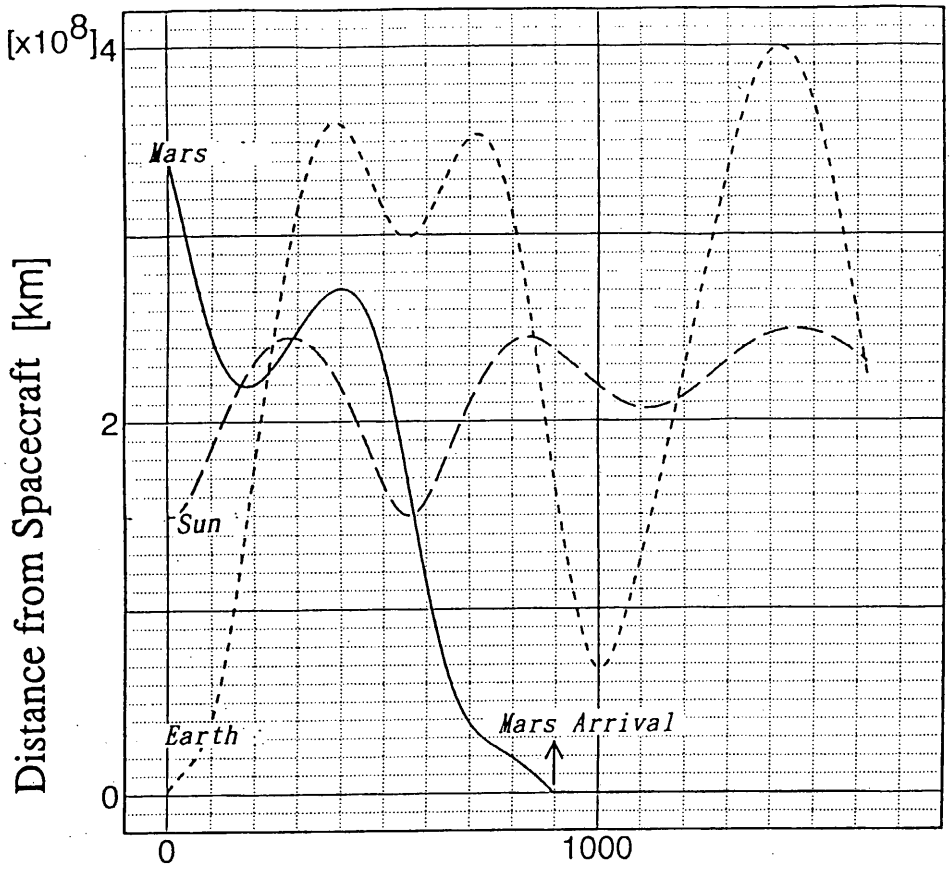

Distance Info (Backup Launch Window, Mars arrival:2001)

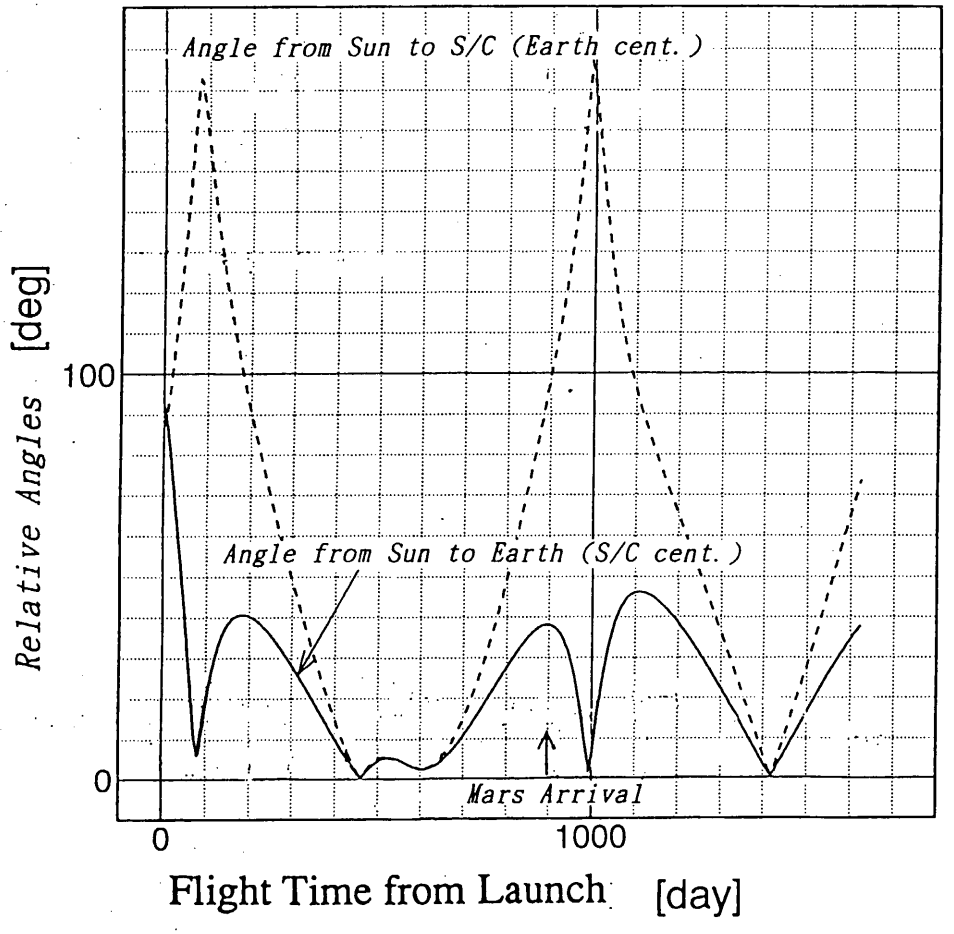

Angle Info (Backup Launch Window, Mars arrival:2001)

Mass Budget (Nominal Launch Window, Mars arrival:1999)

改版

平成9年12月23日

Table－1　Planet-B　1／2液燃料配分

	(a)	(b)	(c)	(d)	(e)	(f)	(g)	(h)	(i)	(j)	(k)	(l)	(m)	(n)	(o)	(p)	(q)	(r)	(s)	(t)	(u)
		初期条件		制御量				消費燃料					衛星質量	個別 消費		通算 消費		個別 消費		残量	[kg]
	イベント	Iz [kgm2]	ω [rpm]	2液ΔV [m/s]	1液ΔV [m/s]	reo. [deg]	Δω [rpm]	2液ΔV [kg]	1液ΔV [kg]	reo. [kg]	Δω [kg]	小計 [kg]	[kg] 540.000	2液	1液	2液	1液	N2H4	NTO	N2H4	NTO
(1)	ANC	179	60.0				10.000	0.00	0.000	0.000	0.128	0.128	539.872	0.0	0.1	0.0	0.1	0.1	0.0	171.8	101.4
(2)	スピンダウン(60-->2.7rpm)	179	51.0				57.3	0.00	0.000	0.000	0.731	0.731	539.142	0.0	0.7	0.0	0.9	0.9	0.0	171.0	101.4
(3)	パドル展開(2.7-->2rpm)	179	2.7					0.00	0.000	0.000	0.000	0.000	539.142	0.0	0.0	0.0	0.9	0.9	0.0	171.0	101.4
(4)	スピンアップ(2-->10rpm)	257	2.0				8.0	0.00	0.000	0.000	0.146	0.146	538.995	0.0	0.1	0.0	1.0	1.0	0.0	170.9	101.4
(5)	スラスタ較正、他	257	10.0			10	1.0	0.00	0.000	0.034	0.018	0.052	538.943	0.0	0.1	0.0	1.1	1.1	0.0	170.8	101.4
(6)	軸変更ΔV	257	10.0	20		60		3.54	0.000	0.203	0.000	3.740	535.204	3.5	0.2	3.5	1.3	3.3	1.5	168.6	99.9
(7)	周期調整ΔV	257	10.0	100	30	300		17.33	9.102	1.015	0.000	27.447	507.756	17.3	10.1	20.9	11.4	23.4	8.9	148.5	92.5
(8)	近地点高度上げΔV	256	10.0		33	5		0.00	9.499	0.017	0.000	9.516	498.241	0.0	9.5	20.9	20.9	32.9	8.9	139.0	92.5
(9)	1stスウィングバイターゲット補正ΔV	255	10.0		1	5		0.00	0.282	0.017	0.000	0.299	497.941	0.0	0.3	20.9	21.2	33.2	8.9	138.7	92.5
(10)	2ndスウィングバイターゲットΔV	255	10.0		10	5		0.00	2.823	0.017	0.000	2.840	495.102	0.0	2.8	20.9	24.0	36.0	8.9	135.9	92.5
(11)	2ndスウィングバイターゲット補正ΔV	255	10.0		2	5		0.00	0.561	0.017	0.000	0.578	494.524	0.0	0.6	20.9	24.6	36.6	8.9	135.3	92.5
(12)	地球発OME(コサインロス考慮)	255	10.0	420		210		63.85	0.000	0.707	0.000	64.559	429.965	63.9	0.7	84.7	25.3	74.0	36.0	97.9	65.4
(13)	地球発OME補正ΔV	246	10.0	36		180		5.06	0.000	0.584	0.000	5.649	424.316	5.1	0.6	89.8	25.9	77.5	38.2	94.4	63.2
(14)	ミッドコースΔV	245	10.0		8	10		0.00	1.924	0.032	0.000	1.957	422.360	0.0	2.0	89.8	27.9	79.5	38.2	92.4	63.2
(15)	火星着OME(コサインロス考慮)	245	10.0	1257		210	30.0	143.11	0.000	0.677	0.523	144.313	278.047	143.1	1.2	232.9	29.1	162.9	99.0	9.0	2.4
(16)	伸展物展開	206	10.0			5		0.00	0.000	0.014	0.000	0.014	278.034	0.0	0.0	232.9	29.1	162.9	99.0	9.0	2.4
(17)	近火点保持ΔV	309	7.5		10	10		0.00	1.576	0.031	0.000	1.607	276.427	0.0	1.6	232.9	30.7	164.5	99.0	7.4	2.4
(18)	近火点変更ΔV	309	7.5		20	10		0.00	3.134	0.031	0.000	3.165	273.262	0.0	3.2	232.9	33.8	167.7	99.0	4.2	2.4
(19)	周期調整(フライバイ)ΔV	308	7.5		2			0.00	0.310	0.000	0.000	0.310	272.952	0.0	0.3	232.9	34.2	168.0	99.0	3.9	2.4
(20)	地球追尾(地球発70日～ミッションエンド)	308	7.5			500		0.00	0.000	1.521	0.000	1.521	271.432	0.0	1.5	232.9	35.7	169.5	99.0	2.4	2.4
(21)	スピンレート維持	307	7.5				5.0	0.00	0.000	0.000	0.109	0.109	271.322	0.0	0.1	232.9	35.8	169.6	99.0	2.3	2.4
(22)	合体時の姿勢安定維持	307	7.5				10.0	0.00	0.000	0.000	0.219	0.219	271.104	0.0	0.2	232.9	36.0	169.8	99.0	2.0	2.4
(23)	セーフホールド	307	7.5			300		0.00	0.000	0.910	0.000	0.910	270.193	0.0	0.9	232.9	36.9	170.8	99.0	1.1	2.4
(24)	地球サーチ	307	7.5			180		0.00	0.000	0.546	0.000	0.546	269.647	0.0	0.5	232.9	37.5	171.3	99.0	0.6	2.4
				1833	116	2005	121	232.90	29.212	6.371	1.874	270.353									

制御後の値

2液(ΔV)比推力	310	[sec]
1液(ΔV)比推力	180	[sec]
姿勢変更スラスタ比推力	150	[sec]
スピンレート調整スラスタ比推力	150	[sec]
姿勢変更スラスタトルクアーム	0.94	[m]
スピンレート調整スラスタトルクアーム	1.00	[m]

消費量(nominal)			271.3
1液	32.3		32.3
2液:MR=0.74	137.4	101.6	239.0
	N2H4	NTO	[kg]

(MHI殿;有効推薬量)

(b) tear_dropを考慮した燃料分布関数近似式を用いて計算。
(c) 制御開始時のスピンレート
(d) OMEでのΔV量
(e) RCSでのΔV量
(f) RCSでの姿勢変更量
(g) スピンレート変更量
(h)～(k) 各制御に対応した消費燃料(2液ΔVはN2H4とNTOの合計量。それ以外はN2H4の消費量)
(l) 各制御での燃料消費小計(N2H4＋NTO)
(m) 初期衛星重量を540kgと仮定したときの、制御開始時の衛星重量
(n)(o) 2液／1液、それぞれの消費量(2液はN2H4＋NTO)
(p)(q) 2液／1液、それぞれの通算消費量(2液はN2H4＋NTO)
(r)(s) N2H4／NTOそれぞれの個別消費量
(t)(u) N2H4／NTOの通算消費量
今回の燃料配分では、最後にN2H4＝0. 6kg、NTO＝2. 4kg残。

11.4 Mars Orbit Insertion Conditions (Nominal Launch Window)

Below is the nominal MOI (Mars Orbit Insertion) condition described in various coordinate systems. Both pre-MOI and post-MOI conditions are listed. Constants used for coordinate transformation are also shown for reference.

Mars gravity constant: 42828.310 km3/s2.

[Pre MOI ; Mars Centered Earth Mean Equatorial Plane of 2000 Coordinate System]
Epoch : 1999/10/11 7:45:14 (UTC) (Julian Date=2451462.8230750)

x	:	-382.58568	[km]
y	:	-3398.56381	[km]
z	:	-1403.99734	[km]
vx	:	-5.74047323008	[km/sec]
vy	:	1.06788800043	[km/sec]
vz	:	-1.00400693697	[km/sec]

Epoch : 1999/10/11 7:45:14 (UTC) (Julian Date=2451462.8230750)

[Post MOI ; Mars Centered Earth Mean Equatorial Plane of 2000 Coordinate System]

x	:	-382.58568	[km]	semi-major axis	: 29025.564 [km]
y	:	-3398.56381	[km]	eccentricity	: 0.872629645 [-]
z	:	-1403.99734	[km]	inclination	: 155.4160123 [deg]
vx	:	-4.51285933032	[km/sec]	ascending node	: 147.3851014 [deg]
vy	:	0.83951760305	[km/sec]	argument of periapsis	: 246.0326541 [deg]
vz	:	-0.78929765746	[km/sec]	mean anomaly	: 359.9956292 [deg]

[Post MOI ; Mars Centered Earth Mean Orbital Plane (Ecliptic) of 2000 Coordinate System]

x	:	-382.58568	[km]	semi-major axis	: 29025.564 [km]
y	:	-3676.59941	[km]	eccentricity	: 0.872629645 [-]
z	:	63.72867	[km]	inclination	: 166.8317608 [deg]
vx	:	-4.51285933032	[km/sec]	ascending node	: 79.8333058 [deg]
vy	:	0.45627776446	[km/sec]	argument of periapsis	: 175.7919922 [deg]
vz	:	-1.05810736674	[km/sec]	mean anomaly	: 359.9956292 [deg]

[Post MOI ; Mars Centered Mars-True-Equator of Date Coordinate System
(x-axis: Mars autumnal equinox)]

x	:	-3694.05183	[km]	semi-major axis	: 29025.564 [km]
y	:	116.76975	[km]	eccentricity	: 0.872629645 [-]
z	:	90.34532	[km]	inclination	: 140.1267756 [deg]
vx	:	0.04504885181	[km/sec]	ascending node	: 356.5125634 [deg]
vy	:	3.57600836638	[km/sec]	argument of periapsis	: 177.9470163 [deg]
vz	:	-2.98392605432	[km/sec]	mean anomaly	: 359.9956292 [deg]

X-axis: is Mars autumnal equinox i.e. ascending node
of the Mars equator on the Mars orbit
Z-axis: is the Mars north pole
Y-axis: completes right-hand system

[Post MOI ; Mars Centered Mars-True-Equator of Date Coordinate System
(x-axis: Mars prime meridian)]

x	:	672.93834 [km]	semi-major axis	:	29025.564 [km]
y	:	3634.11723 [km]	eccentricity	:	0.872629645 [-]
z	:	90.34532 [km]	inclination	:	140.1267756 [deg]
vx	:	3.52824995622 [km/sec]	ascending node	:	257.8323213 [deg]
vy	:	-0.58422382859 [km/sec]	argument of periapsis	:	177.9470163 [deg]
vz	:	-2.98392605432 [km/sec]	mean anomaly	:	359.9956292 [deg]

X-axis: is Mars prime meridian
Z-axis: is the Mars north pole
Y-axis: completes right-hand system

Constants used in coordinate transformation

Reference 'Report of the IAU/IAG/COSPAR Working Group on Cartographic Coordinates and Rotational Elements of the Planets and Satellites:1994'

* TDB(Barycentric Dynamic Time) T
* centuries past J2000 (TDB) TMARS = (T - 2451545.0D0) / 36525.0D0
* days past J2000 (TDB) TTMARS = (T - 2451545.0D0) / 1.0D0
* right ascension of the Mars north pole w.r.t.J2000 Earth equator (deg)
A0 = 317.681D0 - 0.108D0 * TMARS
* declination of the Mars north pole w.r.t.J2000 Earth equator (deg)
D0 = 52.886D0 - 0.061D0 * TMARS
* Mars prime meridian as a rotation about the Mars north pole (deg)
PM = 176.901D0 + 350.8919830D0 * TTMARS
* Mars orbit inclination with respect to J2000 Earth ecliptic (deg)
DI = 1.85457861524142 9D0
* Mars orbit ascending node with respect to J2000 Earth ecliptic (deg)
DLO = 49.560469440696 12D0

11.5 Mars Orbiter Phase Characteristics (Nominal Launch Window)

In the following figures, depicted are properties of the orbit around Mars such as a distance from the earth, periapsis angles, shadow durations, altitude changes of ascending and descending nodes, and so forth. These figures indicate geometric relations among the spacecraft, Mars, the earth and the sun, for the purpose of designing scientific observation plans.

Figures

A : Earth-Mars distance / Shadow duration / Periapsis angle from the Sun direction (sub-solar angle).

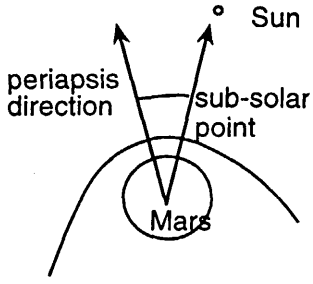

B : Periapsis Altitude / Periapsis In-Plane Angle and Out-of-Plane Angle in the Sun-Mars Coordinate System

Periapsis in-plane and out-of-plane angles are defined in the Sun-Mars rotating coordinate, where 0 deg points to the sun. In order to grasp tendency in the vicinity of periapsis, the following three points are examined.

P(×) : Periapsis (0 deg in true anomaly)
P(△) : Forward (+30 deg in true anomaly)
P(◆) : Backward (-30 deg in true anomaly)

C : Altitude of Ascending/Descending Nodes in Mean-Of-Date-Ecliptic Plane Coordinate System

D : Altitude of Ascending/Descending Nodes in AREO-EQ
(Mars-True-Equator of Date Coordinate System, x-axis: Mars autumnal equinox)

E : Inclination in Mean-Of-Date-Ecliptic Plane Coordinate System
Inclination in AREO-EQ
(Mars-True-Equator of Date Coordinate System, x-axis: Mars autumnal equinox)
Relative Angles from Earth
to Normal direction with respect to Orbit Plane, Periapsis direction and Periapsis Velocity

F : Apoapsis Altitude / Orbital Period / Altitude of Shadow Region
Altitude of Orthogonal Points to the Earth Direction

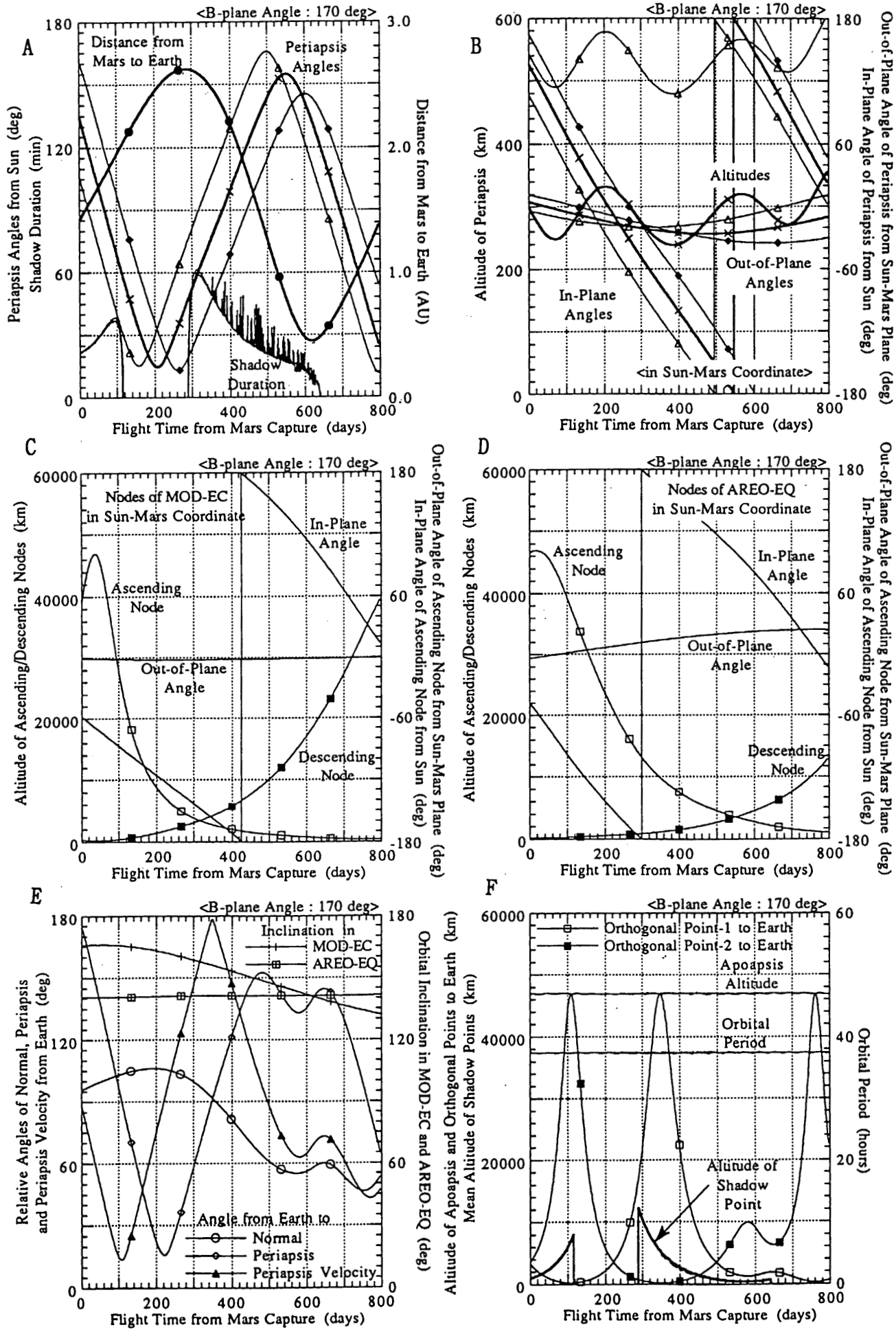

Properties of Orbits around Mars

11.6 Initial Operations Plan (Nominal Launch Window)

Nominal Sequence of Events for the Initial Phase

from Launch	AOCS Timer	Event
X+0000sec		1st Stage IG
0075sec		2nd Stage IG
0218sec		3rd Stage IG
0324sec		3rd Stage BO
0402sec		JKSC Elev.=0deg
1195sec	0sec	Spacecraft AOCS Sequence Timer Start
1201sec		4th Stage IG
1203sec	8sec	Active Nutation control Start
1271sec		4th Stage BO
1365sec	170sec	Active Nutation Control Stop
1370sec		4th Stage SEP
1495sec	300sec	S/C Spin_down-1 Start (51->8rpm)
1795sec	600sec	S/C Spin_down_2 Start (->2.7rpm)
1975sec	780sec	Paddle Deployment
2095sec	900sec	S/C Spin_up Start (->10rpm)

Nominal Sequence of Events for the First Pass from JKSC

from Launch	Event
X+ 11hour 0min.	JKSC Elev.>0deg
120min.	Attitude Determination
150min.	Reorientation-1
180min.	Reorientation-2
240min.	Injection Error Correction Delta-V
270min.	Reorientation-3
300min.	Reorientation-4
330min.	R&RR

Nominal AOCS Sequence of Events (0-2 Pass)

Launch Date: 7/3(UTC)											
						Software					
hh:mm (UTC)	hh:mm (JST)	hh:mm X+	Event	S/C MNV	ORB PLN	ADS	RCS CMD	CMD EST	DV MON		
<<0-pass>>											
<7/3>	<7/4>										
18:26	3:26	0:00	Launch								
18:31	3:31	0:05	3BO								
18:40	3:40	0:14	3BO Status (<--JKSC)		@						
18:47	3:47	0:21	KM BO	ANC SPN							
19:00	4:00	0:34	KM Status (<--Christmas)		v						
19:24	4:24	0:58	Wallops AOS								
21:42	6:42	3:16	Goldstone AOS(50,000km)								
23:00	8:00	4:34	*Fax-1 <--JPL		@						
<7/4>											
01:00	10:00	6:34	*Fax-2 <--JPL		@						
03:00	12:00	8:34	*Fax-3 <--JPL		@						#
04:07	13:07	9:41	: Wallops LOS								
<<1-pass>>											
05:11	14:11	10:45	JKSC AOS(120,000km)		v						
			*AOS Check								#
			*TLM Mode Change								#
			*ACM Bias Estimation								#
05:15	14:15	10:49	*Attitude Determination			@					#
<<Reo-1>>											
05:40	14:40	11:14	*Reo.Command-1 Generation			v	@				#
06:00	15:00	11:34	*CMD TX & Exec.(A1-4;200ms)	@ R E			v				
06:10	15:10	11:44	*Attitude Determination	v O		@					
			*RCS Calibration								#
<<Reo-2>>											
06:30	15:30	12:04	*Reo.Command-2 Generation			v	@				#
06:50	15:50	12:24	*TX CMD & Exec.(A1-4;200ms)	@ R	@		v				

```
|     |     |     | |                          || E| | |   |   |   |   |
|07:10|16:10|12:44| *Attitude Determination    |v O| | | @ |   |   |   |
+<<DeltaV>>-+-----+-|--------------------------+---+---+-|-+---+---+---+
|07:20|16:20|12:54| *DeltaV Command Generation |   | v | v | @ |   |   |#
|     |     |     | |                          |   |   |   | | |   |   |
|07:40|16:40|13:14| *DeltaV Command Estimation |   |   |   | v | @ |   |#
|     |     |     | |                          |   |   |   |   | | |   |
|07:50|16:50|13:24| *CMD TX & Exec.(OME;max60s)|@ D|   |   |   | v | @ |
|     |     |     | |                          || T|   |   |   |   | v |
|07:51|16:51|13:25| *Attitude Determination    |v V|   | @ |   |   |   |
+<<Reo-3>>--+-----+-|--------------------------+---+---+-|-+---+---+---+
|08:00|17:00|13:34| *Reo.Command-3 Generation  |   |   | v | @ |   |   |#
|  |  |     |     | |    (Prepared CMD)        |   |   |   | | |   |   |
|08:00|17:00|13:34| *CMD TX & Exec.(A1^4;200ms)|@ R|   |   | v |   |   |
|     |     |     | |                          || E|   |   |   |   |   |
|08:20|17:20|13:54| *Attitude Determination    |v O|   | @ |   |   |   |
+<<DR/R&RR>>+-----+-|--------------------------+---+---+-|-+---+---+---+
|08:30|17:30|14:04| *DR REP                    |   |   | v |   |   |   |#
|     |     |     | *R&RR                      |   |   |   |   |   |   |
|14:56|23:56|20:30| |     Madrid AOS(182,000km)|   |   |   |   |   |   |
|     |     |     | *LOS Check               | |   |   |   |   |   |   |
|     |<7/5>|     | |                        | |   |   |   |   |   |   |
|15:08| 0:08|20:42|JKSC LOS(183,000km)       | |   |   |   |   |   |   |
+-----+-----+-----+------------------------|--+---+---+---+---+---+---+
|22:17| 7:17|27:51|Goldstone AOS(218,000km) | |   |   |   |   |   |   |
|23:55| 8:55|29:29|    :  Madrid LOS(226,000km)|   |   |   |   |   |   |
+-----+-----+-----+----:---------------------+---+---+---+---+---+---+
      11:00/11:25 Kagoshima(JAS/JAL)
        |     |     |
      12:35/13:00 Haneda
+<7/5>+-----+-----+--------------------------+---+---+---+---+---+---+
|05:30|14:30|35:04|JKSC AOS(249,000km)       |   |   |   |   |   |   |   |
|     |<7/6>|     | |                        |   |   |   |   |   |   |   |
|15:41| 0:41|45:15|JKSC LOS(286,000km)       |   |   |   |   |   |   |   |
|     |     |     |                          |   |   |   |   |   |   |   |
|22:23| 7:23|51:57|Goldstone AOS(306,000km)  |   |   |   |   |   |   |   |
|<7/6>|     |     |    |                     |   |   |   |   |   |   |   |
|08:07|17:07|61:41|Goldstone LOS(332,000km)  |   |   |   |   |   |   |   |
+-----+-----+-----+--------------------------+---+---+---+---+---+---+
<<Remarks>>
      @: Start   v: End   #: 6/11 Rehearsal Item
<<Software>>
      *ORB PLN: Orbital Design Software(ISAS/NEC)
      *ADS    : Attitude Determination Software(NEC)
      *RCS CMD: RCS Command Generation & Simulation Software(NEC)
      *CMD EST: Estimation Software for RCS Command(ISAS/FJT)
      *DV MON : Maneuver(DeltaV) Monitoring Software(ISAS/FJT)
```

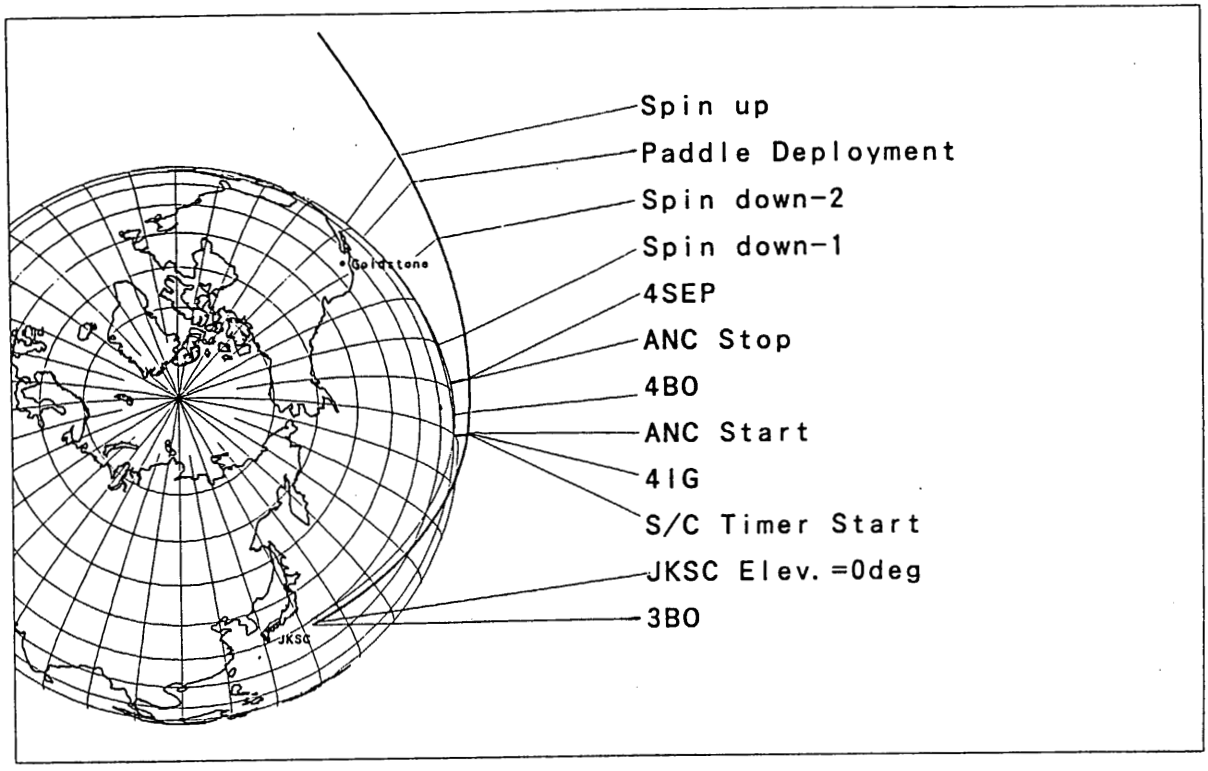

Initial Sequence of Events

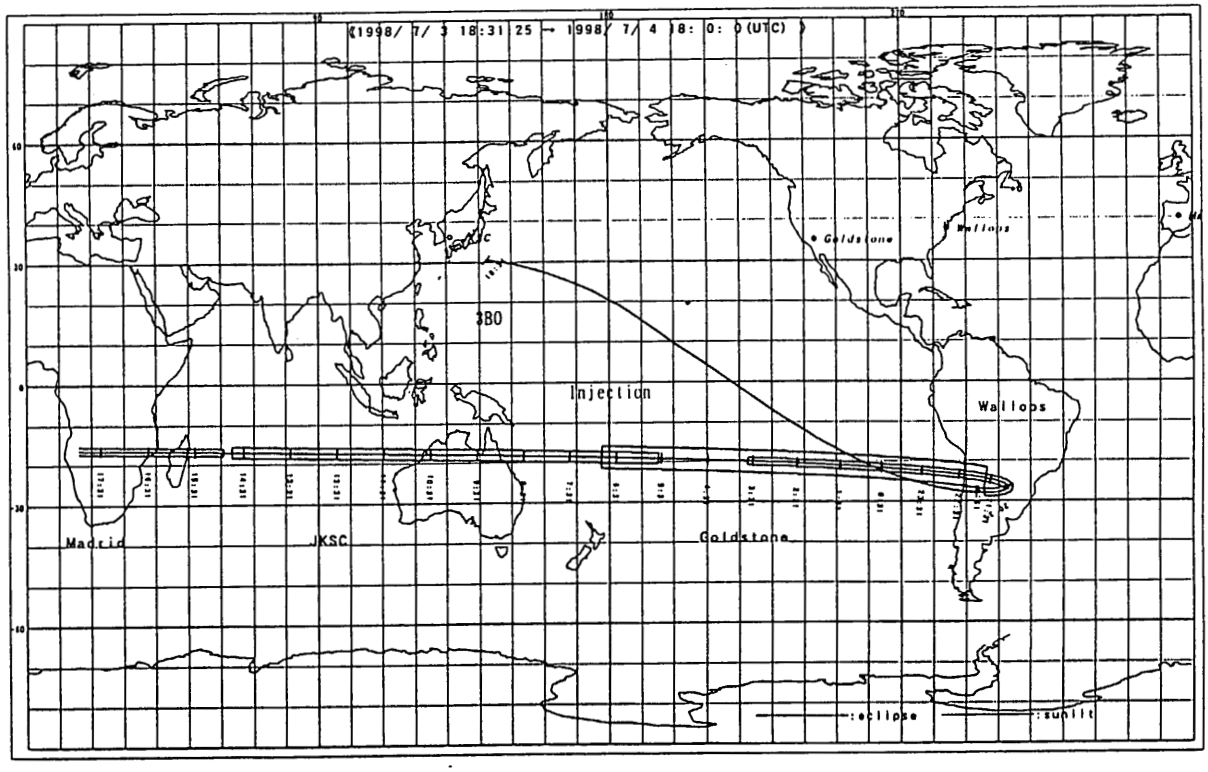

Foot Print from Third-Stage Burn-Out to 1st Pass from JKSC

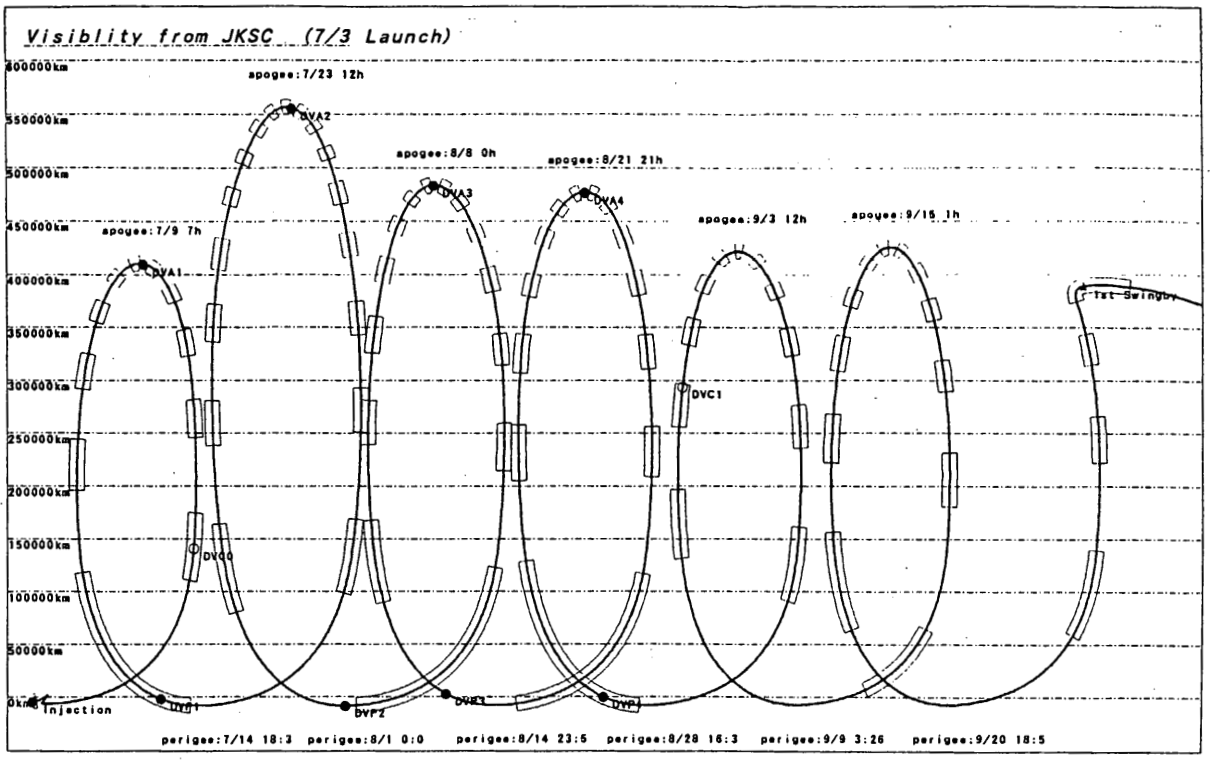

Visibility from JKSC (from Launch to 1st Lunar Swingby)

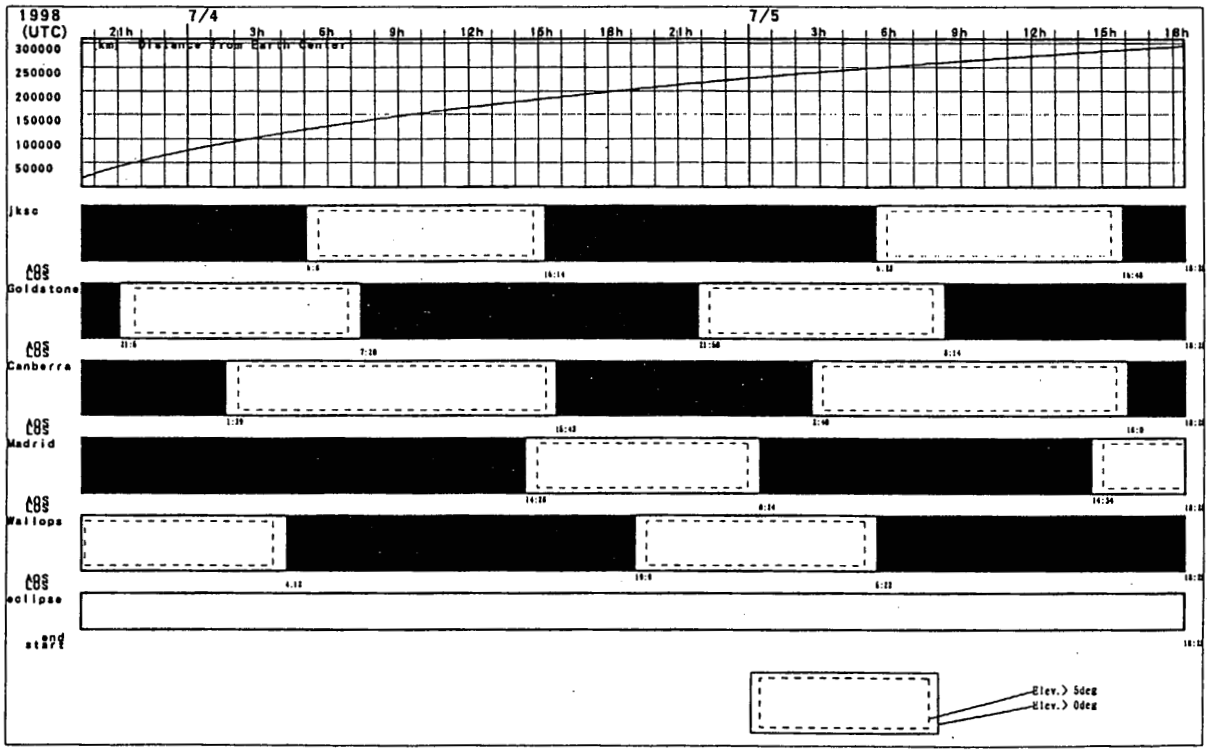

Visibility from Various Stations (from Launch to 2nd Pass)

11.7 Mars Orbit Insertion Operations Plan (Nominal Launch Window)

MOI AOCS Sequence

-10 day	Trim-ΔV1
-5 day	Trim-ΔV2
-53 min.	Reorientation Start
-28 min.	Reorientation End
-23 min.	Spin up (10->25rpm)
-20 min.	Eclipse Start
-10 min.	Occultation Start
-8 min.	OME IG
0 min.	Peri-Areon <---MOI
+5 min.	Eclipse End
+7 min.	OME BO
+12 min.	Spin Down (25rpm->10rpm)
+14 min.	Occultation End
+17 min.	Reorientation Start
+37 min.	Reorientation End (Earth acquisition)

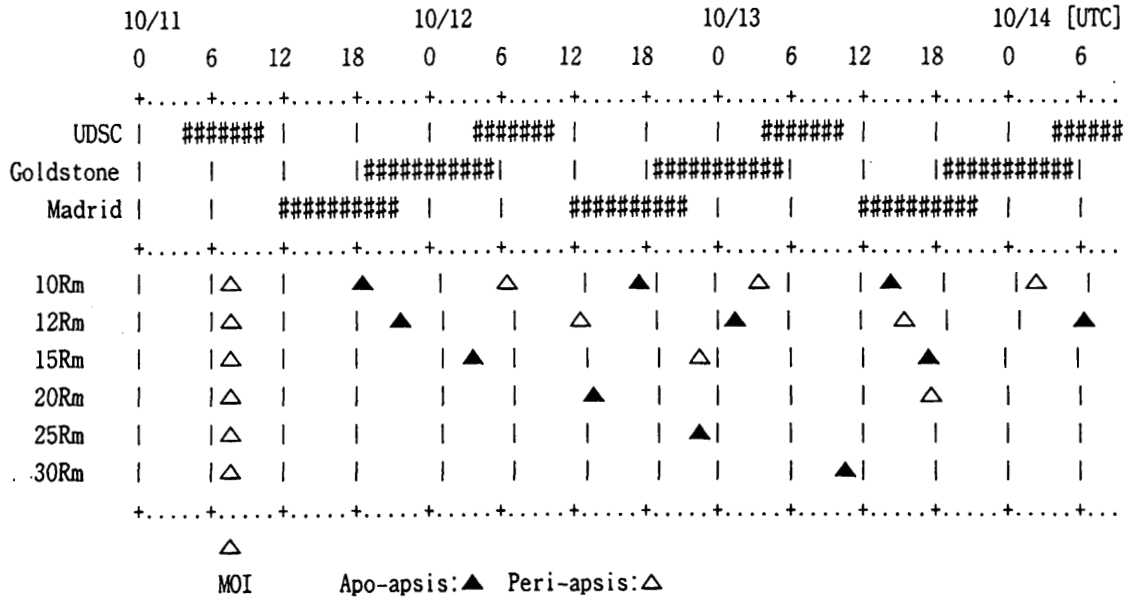

Visibility after MOI as a Function of Apoapsis Distance

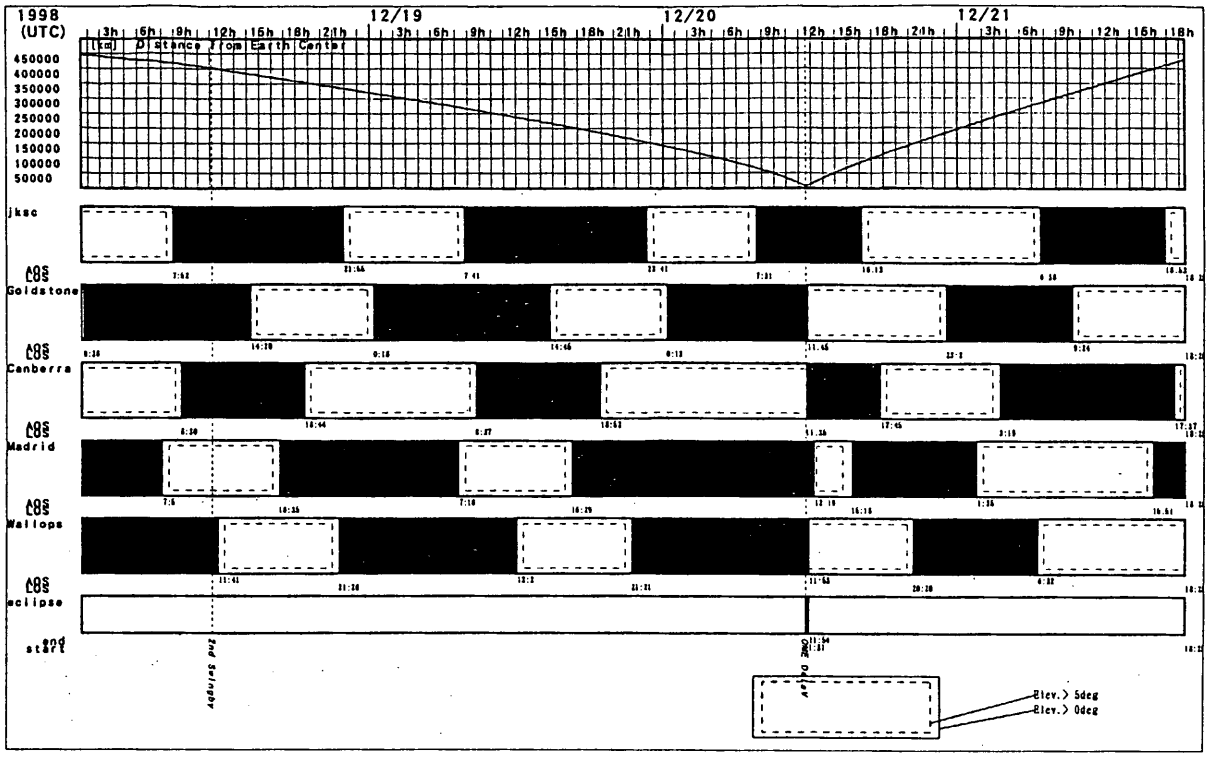

Visibility from Various Stations (around Earth Escape delta-V)

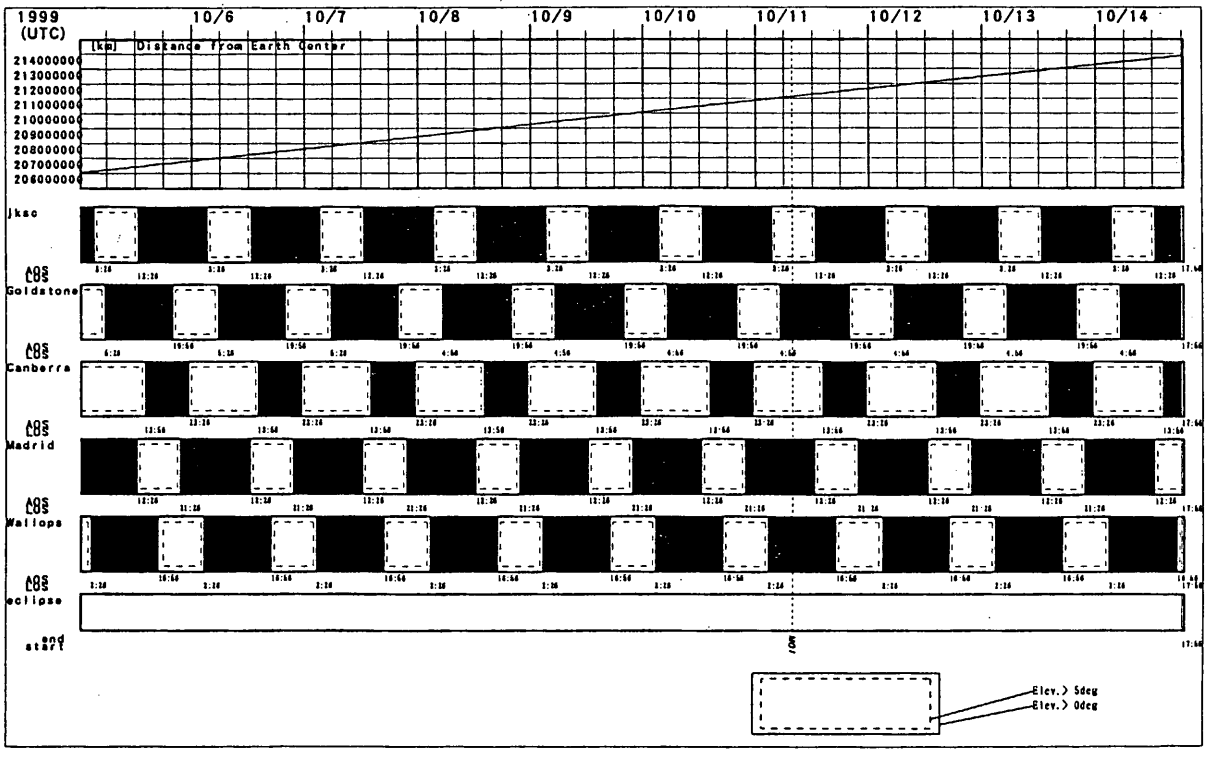

Visibility from Various Stations (around Mars Orbit Insertion)

12. Ground System and Mission Operations

12.1 Spacecraft Checkout, Tracking and Operation System

12.1.1 General

The ISAS's ground systems for operating deep space probes consist of :

(1) The Spacecraft Checkout System for function verification and performance tests of spacecraft prior to launch

(2) Sagamihara Spacecraft Operation Center (SSOC) for spacecraft control and monitor, data collection, and data processing.

(3) Usuda Deep Space Center (UDSC) for telecommunication and tracking of spacecraft.

(4) Kagoshima Space Center (KSC) for telecommunication and tracking of spacecraft

(5) The data communication networks connecting SSOC, UDSC and KSC.

The system configuration of the Spacecraft Checkout System is shown in Figure 1-1 and that of Spacecraft Tracking and Operation System (KSC, UDSC and SSOC) is shown in Figure 1-2.

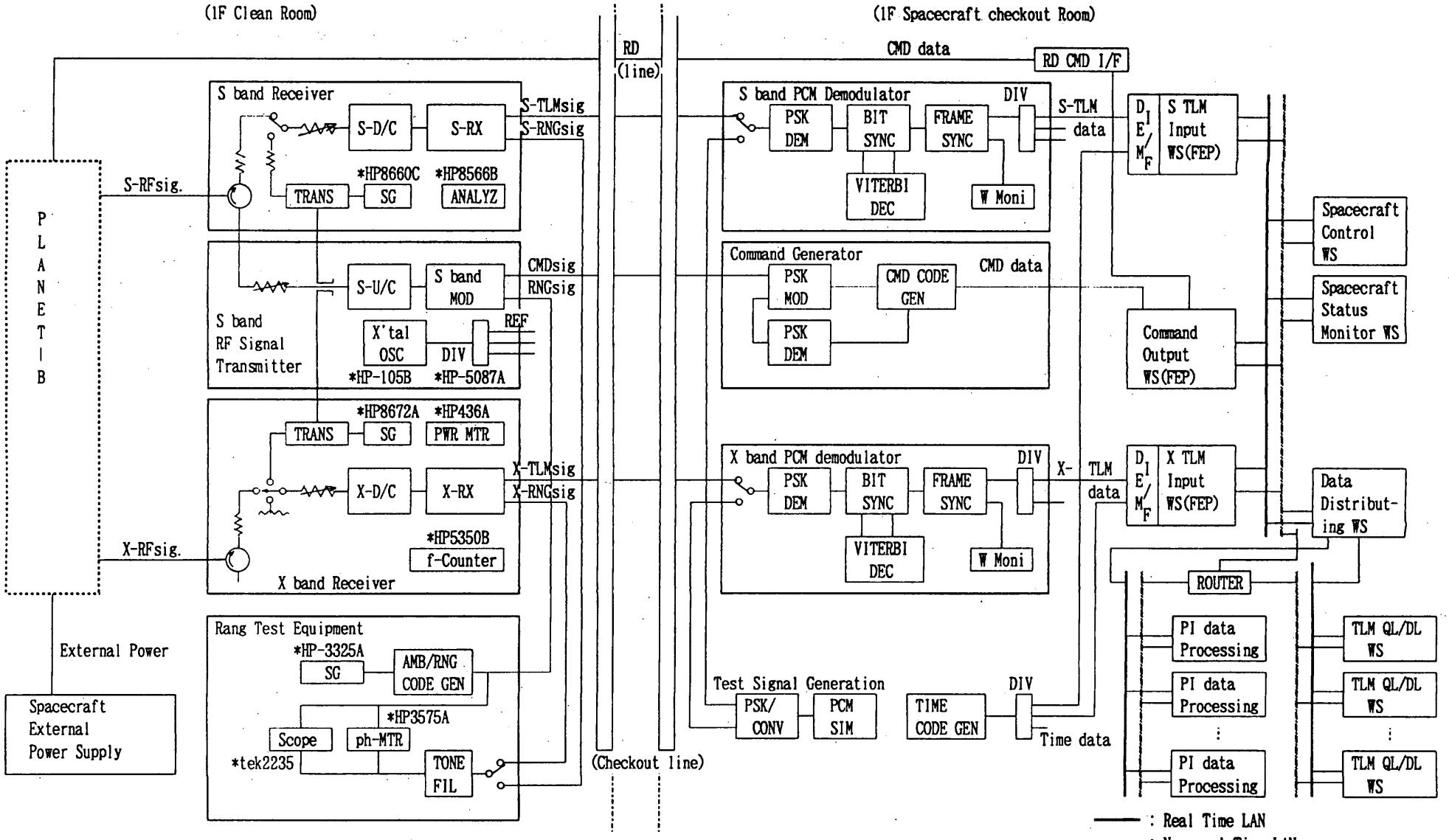

* Note : Measurement equipment on the market

Figure 1-1 System configuration of the spacecraft checkout system (Plan)

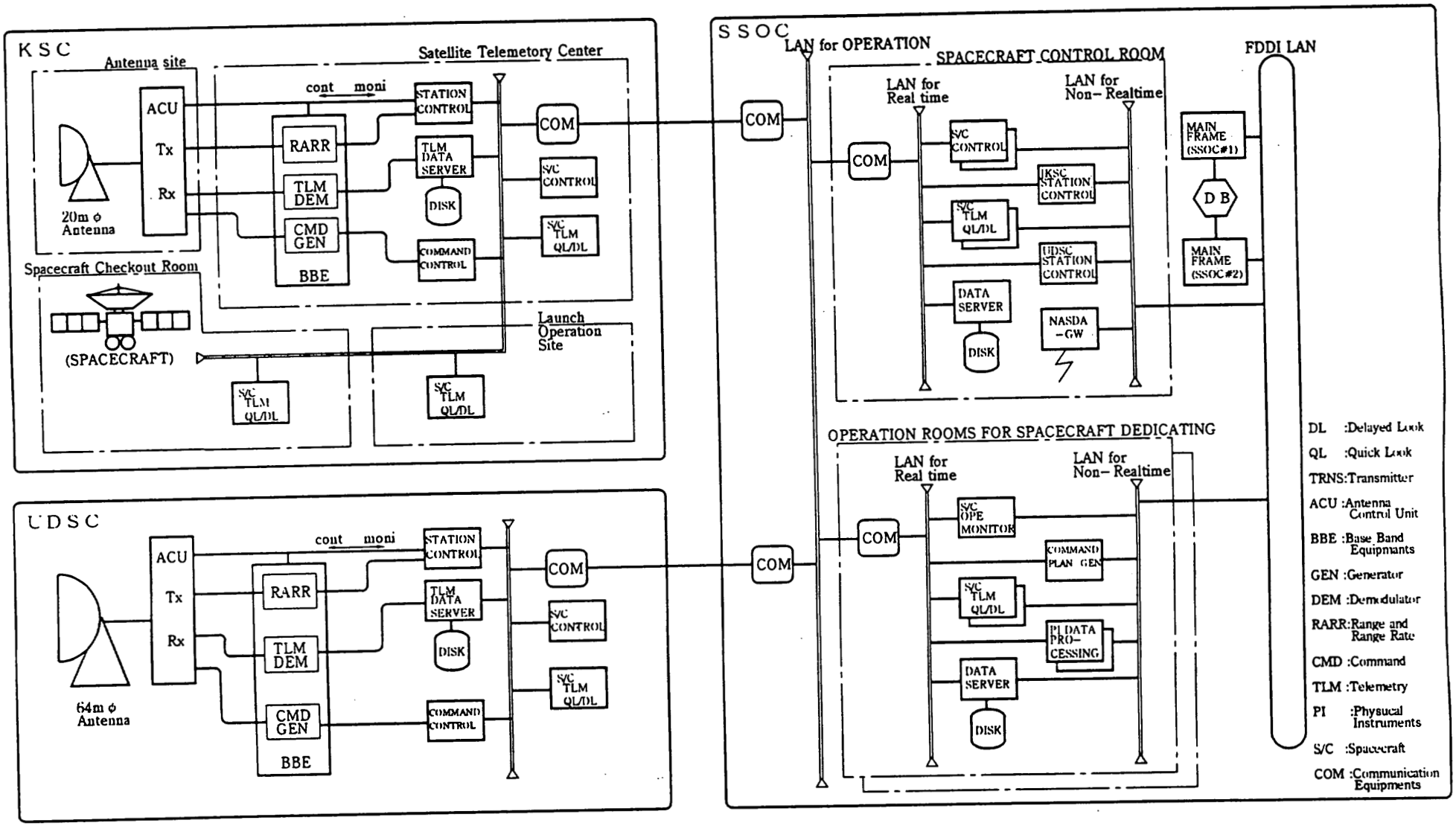

Figure 1–2 System configuration of spacecraft tracking and operation system(UDSC,KSC and SSOC).

12.1.2 Function of Spacecraft Checkout System

The spacecraft checkout system has the functions of spacecraft verification and performance tests which checks all the functions of the PLANET-B spacecraft on flight in Sagamihara campus.

Following are the major functions and performances of the Spacecraft Checkout System.

(1) S band transmitting function

Wire or wireless connection for S band transmission between the spacecraft and the checkout equipment

(2) X band receiving function

Wire or wireless connection for X band reception between the spacecraft and the checkout equipment

(3) S band receiving function

Wire or wireless connection for S band reception between the spacecraft and the checkout equipment

(4) X band telemetry demodulation

PCM,PCM-PSK,PCM-CONV and PCM-CONV-PSK demodulation for X band

(5) S band telemetry demodulation

PCM,PCM-PSK,PCM-CONV and PCM-CONV-PSK demodulation for S band

(6) Command generation

Command code generation and transmission for spacecraft control

(7) Spacecraft control and monitor function

Generating command plans, controlling transmission of command code, and monitoring spacecraft status

(8) Spacecraft data analysis

Spacecraft bus and PI data analysis.

12.1.3 Functions of Spacecraft Tracking and Operation System

12.1.3.1 Sagamihara Spacecraft Operation Center (SSOC)

The Sagamihara Spacecraft Operation Center(SSOC) operates ISAS's spacecraft. Telemetry, commanding and tracking operations are conducted at SSOC which is connected to UDSC and KSC by terrestrial data communication networks.

The major functions of SSOC are :

(1) Spacecraft operation and control

(2) Health and safety monitoring of the onboard instruments

(3) Command/telemetry processing

(4) Engineering trend analysis

(5) Attitude and orbit determination

(6) Management of operations(command planning)

12.1.3.2 Usuda Deep Space Center (UDSC) and Kagoshima Space Center(KSC)

The Usuda Deep Space Center(UDSC) is a ground station for Tracking,Telemetry and Command(TT&C) communication for deep space probes. The Kagoshima Space Center(KSC) supports TT&C communication during a launch phase and an initial orbit phase of interplanetary spacecraft. Range and Range Rate(RARR) measurements are carried out at UDSC and KSC.

The major functions of UDSC and KSC are :

(1) Reception and demodulation of telemetry signal by S-band down link.

(2) Reception and demodulation of telemetry signal by X-band down link.

(3) Transmitting command signal by S-band up link.

(4) Range and Range Rate(RARR) measurement by:

- S-band up link / S-band down link
- S-band up link / X-band down link
- S-band up link / S-band and X-band down link

The UDSC ground station consists of : a 64-meter diameter antenna, a

S-band transmitter, S/X-band receivers, telemetry demodulators, a command generator, a range and range rate measurement equipment, data communications terminal and consoles for station and spacecraft control.

The KSC ground station consists of : a 20-meter diameter antenna, a S-band transmitter, S/X-band receivers, telemetry demodulators, a command generator, a range and range rate measurement equipment, data communications terminal and consoles for station and spacecraft control.

12.1.3.3 Data communication networks connecting SSOC, UDSC and KSC.

The commands generated at SSOC are transmitted to UDSC or KSC, and the telemetry and RARR data are transmitted from UDSC or KSC to SSOC. Monitor information on the ground stations is also transmitted on this network. The network consists of terminal computers, data multiplexers, two 384 kbps circuits, and the main computer at SSOC.

12.1.4 Characteristics of the Spacecraft Checkout, Tracking and Operation System and their Equipment

Major performance of Checkout Equipment are shown on Table 4-1, major performance of Tracking and Operation System are shown on Table 4-2, and the subsystem specifications of Tracking and Operation System are shown on Table 4-3.

Table 4-1(1/2) Major performance of Spacecraft Checkout equipments

No	Items	Specification
S-band Transmitter		
1	Frequency	
2	Power	-35~-85dBm
3	Carrier Sweep	
	(1)Sweep Rate	± 30KHz/sec max
	(2)Sweep Band Width	±120KHz max
4	Modulation	PM
5	Modulation Index	2.0rad max
6	Modulation Signals	CMD : 50Hz~50KHz RNG : 1KHz~2MHz
S/X-band Receiver		
1	Frequency	S-band : 2200~2300MHz X-band : 8400~8500MHz
2	Input Level	+30~-40 dBm(S/X-band)
3	Carrier Tracking	PLL
	(1)Tracking Range	S-band : ±120KHz X-band : ±120kHz (additional doppler aid)
	(2)Loop Band Width (2BL)	3KHz/1KHz/300Hz/ 100Hz/30Hz
4	Demodulation	PM 1.5rad max
5	Demodulation Signals	TLM : 1.5MHz RNG : 1.5MHz

Table 4-1(2/2) Major performance of Spacecraft Checkout equipments

No	Items	Specification
Telemetry Demodulator (S/X BAND)		
1	Demodulation	PCM,PCM-PSK, PCM-CONV,PCM-CONV-PSK
2	PCM Input Codes	NRZ-L,M,S BiPH-L,M,S
3	Convolutional Code	Constant Length : 7 Rate : 1/2
4	PSK Subcarrier Frequency	200Hz~1MHz
5	PCM Symbol Rate	50sps~600Ksps
6	PSK Subcarrier /PCM Symbol Rate	4 ~1000
7	Required S/N_0	STs/N_0 : 5.5dB (with CONV) STs/N_0 : 11.0dB (without CONV)
Command Generator		
1	Modulation	PCM(PN)-PSK
2	PSK Subcarrier Frequency	100Hz~16.384KHz
3	Bit Rate	100/256~16384/2 bps
4	PCM Code	NRZ-L/BiPH-L

Table 4-2 Major performance of Tracking and Operation System

No	Items	Usuda Deep Space Center (UDSC)	Kagoshima Space Center (KSC)
1	Transmit Frequency	S-band : 2025～2120MHz	S-band : 2025～2120MHz
2	Receiving Frequency	S-band : 2200～2300MHz	S-band : 2200～2300MHz
		X-band : 8400～8500MHz	X-band : 8400～8500MHz
3	Antenna Mount	64m ϕ Az-EL Mount	20m ϕ Az-EL Mount
4	EIRP	S-band : 132.4dBm (at 2.12GHz)	S-band : 121.2dBm (at 2.12GHz)
5	G/T (EL 90°)	S-band : 42.0dB/K (at 2.3GHz)	S-band : 32.8dB/K (at 2.3GHz)
		X-band : 51.2dB/K (at 8.5GHz)	X-band : 43.0dB/K (at 8.5GHz)
6	Polarization(TX)	S-band : RHCP／(LHCP)	S-band : RHCP／LHCP
7	Polarization(RX)	S-band : RHCP／(LHCP)	S-band : Polarization Diversity Receiving
		X-band : RHCP／(LHCP)	X-band : Polarization Diversity Receiving
8	RARR		
	(1)Range Measuring	about 3 AU	about 500,000Km
	(2)Ranging Method	Sequential code	PN-code
	(3)Ranging Frequency	fup/2^{11}～2^{14} (1000/500/250/125KHz)	500／100／20KHz
	(4)Doppler Measuring	± 30Km/sec	± 12Km/sec
	(5)Doppler Measuring Mode	1WAY/2WAY	1WAY/2WAY
9	Telemetry Demodulator		
	(1)Demodulation	PCM,PCM-PSK,PCM-CONV ,PCM-CONV-PSK	PCM,PCM-PSK,PCM-CONV ,PCM-CONV-PSK
10	Command Generator		
	(1)Modulation	PCM(PN)-PSK	PCM(PN)-PSK

Table 4-3(1/4) Subsystems specification of Tracking and Operation System

No	Items	Usuda Deep Space Center (UDSC)	Kagoshima Space Center (KSC)
Antenna			
1	Transmit Frequency	S-band : 2080~2120MHz	S-band : 2025~2120MHz
2	Receiving Frequency	S-band : 2200~2300MHz	S-band : 2200~2300MHz
		X-band : 8400~8500MHz	X-band : 8400~8500MHz
3	Method	64mϕ Cassegrain	20mϕ Cassegrain
4	Polarization(TX)	S-band : RHCP/(LHCP)	S-band : RHCP/LHCP
5	Polarization(RX)	S-band : RHCP/(LHCP)	S-band : RHCP/LHCP
		X-band : RHCP/(LHCP)	X-band : RHCP/LHCP
6	Antenna Gain	S-band TX : 59.9dB (at 2.12GHz)	S-band TX : 51.5dB (at 2.12GHz)
		S-band RX : 61.5dB (at 2.3GHz)	S-band RX : 52.2dB (at 2.3GHz)
		X-band RX : 70.6dB (at 8.5GHz)	X-band RX : 62.8dB (at 8.5GHz)
7	Antenna Noise Temp(EL 90°)	S-band RX : 44K	S-band RX : 41K
		X-band RX : 31K	X-band RX : 39K
8	Driving Angle	Az : ±270° (South Center)	Az : ±270° (South Center)
		EL : 5° ~ 92°	EL : −1° ~ 91°
9	Driving Speed	Az : 0.5°/sec, 0.5°/sec^2	Az : 5°/sec, 5°/sec^2
		EL : 0.5°/sec, 0.5°/sec^2	EL : 2.5°/sec, 2.5°/sec^2
10	Driving Mode	Auto Tracking(S-band), Program,Program Scan, Manual	Auto Tracking(S/X-band), Coasting,Program,Slave, Manual

Table 4-3(2/4) Subsystems specification of Tracking and Operation System

No	Items	Usuda Deep Space Center (UDSC)	Kagoshima Space Center (KSC)
S-band Transmitter			
1	Frequency	2080~2120MHz	2025~2120MHz
2	Power	20/2/0.2KW	10/1/0.1KW
3	Feed Loss	less than 0.5dB	less than 0.5dB
4	Carrier Sweep		
	(1)Sweep Rate	±30KHz/sec max	±30KHz/sec max
	(2)Sweep Band Width	±300KHz max	±300KHz max
5	Modulation	PM	PM
6	Modulation Index	2.0rad max	2.0rad max
7	Modulation Signals	CMD : 50Hz~200KHz RNG : 1KHz~1.5MHz	CMD : 50Hz~200KHz RNG : 1KHz~1.5MHz
S/X-band Receiver			
1	Frequency	S-band : 2200~2300MHz X-band : 8400~8500MHz	S-band : 2200~2300MHz X-band : 8400~8500MHz
2	Receiving Noise Temperature	S-band : 45K X-band : 55K	S-band : 45K X-band : 55K
3	Input Level	−85~−162dBm(S/X-band)	−55~−155dBm(S/X-band)
4	Auto Tracking Input Level	−85~−140dBm (S-band Only)	−55~−140dBm(S/X-band)
5	Receiving Method	Single (S/X-band)	Polarization Diversity Receiving (S/X-band)
6	Carrier Tracking	PLL	PLL
	(1)Tracking Range	S-band : ±500KHz X-band : ±2MHz (additional doppler aid)	S-band : ±500KHz X-band : ±2MHz (additional doppler aid)
	(2)Loop Band Width (2BL)	1KHz/300Hz/100Hz/ 30Hz/10Hz/3Hz	3KHz/1KHz/300Hz/ 100Hz/30Hz/10Hz
7	Demodulation	PM 1.5rad max	PM 1.5rad max
8	Demodulation Signals	TLM : 1.5MHz RNG : 1.5MHz	TLM : 1.5MHz RNG : 1.5MHz

Table 4-3(3/4) Subsystems specification of Tracking and Operation System

No	Items	Usuda Deep Space Center (UDSC)	Kagoshima Space Center (KSC)
RARR Measurement			
1	Range Measuring Method	Sequential Code	PN-Code
2	Ranging Frequency	fup/2^{11}～fup/2^{14} (1000/500/250/125KHz)	500/100/20KHz
3	Range Modulation Index	0.2～1.0rad	0.2～1.5rad
4	Range Measuring	about 3AU	about 500,000Km
5	Range Measuring Accuracy	less than 2m rss (at 500KHz)	less than 1m rss (at 500KHz)
6	Range Measuring Resolution	0.15m	0.15m
7	Required S/N_0	9 dBHz	27 dBHz
8	Data Sampling Rate	1～60 data/time	1,1/2,1/4 data/sec
9	Range Rate Measuring Method	Integrated Doppler	Integrated Doppler
10	Doppler Measuring	±30Km/sec	±12Km/sec
11	Range Rate Measuring Accuracy		
	(1)1WAY	less than 0.5mm/sec rss (at 1/60data/sec)	less than 5 cm/sec rss (at 1data/sec)
	(2)2WAY	less than 0.1mm/sec rss (at 1/60data/sec)	less than 1 cm/sec rss (at 1data/sec)
12	Range Rate Measuring Resolution		
	(1)1WAY	0.01 cycle	1 cm/sec
	(2)2WAY	0.01 cycle	0.05 cm/sec
13	Data Sampling Rate	1,1/2,1/10,1/30,1/60 data/sec	1,1/2,1/4 data/sec

Table 4-3(4/4) Subsystems specification of Tracking and Operation System

No	Items	Usuda Deep Space Center (UDSC)	Kagoshima Space Center (KSC)
Telemetry Demodulator			
1	Demodulation	PCM,PCM-PSK,PCM-CONV, PCM-CONV-PSK	PCM,PCM-PSK,PCM-CONV, PCM-CONV-PSK
2	PCM Input Codes	NRZ-L,M,S BiPH-L,M,S	NRZ-L,M,S BiPH-L,M,S
3	Convolutional Code	Constant Length : 7 Rate : 1/2	Constant Length : 7 Rate : 1/2
4	PSK Subcarrier Frequency	100Hz～999KHz	100Hz～999KHz
5	PCM Symbol Rate	5sps～600Ksps	5sps～600Ksps
6	PSK Subcarrier /PCM Symbol Rate	4 ～1000	4 ～1000
7	Required S/No	STs/No : 5.5dB (with CONV) STs/No : 11.0dB (without CONV)	STs/No : 5.5dB (with CONV) STs/No : 11.0dB (without CONV)
Command Generator			
1	Modulation	PCM(PN)-PSK	PCM(PN)-PSK
2	PSK Subcarrier Frequency	100Hz～16.384KHz	100Hz～16.384KHz
3	Bit Rate	100/256～16384/2 bps	100/256～16384/2 bps
4	PCM Code	NRZ-L/BiPH-L	NRZ-L/BiPH-L

12.2 Orbit Determination System

ISAS OD group
FUJITSU limited

12.2.1 Introduction

The estimation and prediction of PLANET-B orbit is carried out by using orbit determination system constructed in SSOC (Sagamihara Spacecraft Operation Center). PLANET-B mission cruising several orbiting phase in the navigation and guidance as following shown.

(1) orbit injection and earth orbiting phase
(2) trans-mars phase
(3) mars orbit insertion and mars orbiting phase

(1) orbit injection and earth orbiting phase

In the initial pass after launching, S-band range and range rate (RARR) data are transmitted from KSC main control station to SSOC. In this phase, the orbital elements estimated by JPL Nav. team are utilized for antenna prediction and maneuver planning.

After the second pass, main control station is changed to UDSC, and S-band RARR data are transmitted from UDSC to SSOC. In case of orbit maneuver, Doppler data are monitored in real time at SSOC. JPL's orbital elements and tracking data are also used in critical phases, such as lunar swing-by.

(2) trans-mars phase

S-band RARR data obtained from UDSC are used for orbit determination. Tracking data obtained in KSC 34m antenna is also capable from 1999 spring. Moreover, X-band 1-way Doppler data is obtained by using with on-board ultra-stable oscillator in this phase.

(3) mars orbit injection and mars orbiting phase

Just before mars orbit injection, UDSC and JPL/DSN tracking data are utilized for orbit determination. ISAS and JPL Nav. team estimate orbit elements and the other parameters by using exchange tracking data between DSN stations and USUDA station. After injection to mars, orbit determination is performed using S-band range and X-band 1-way Doppler data (2-way coherent Doppler data) obtained UDSC and KSC34, respectively.

The orbit determination system for PLANET-B operation is newly developed on a workstation system. This system consists of the following programs.

(1) orbit determination program
(2) orbit prediction program
(3) real time monitor program

In the following sections, orbit determination system data flow and the main functions of each program are reviewed

12.2.2 Orbit Determination System Data Flow

The data flow of orbit determination system is shown in figure 12.2-1. Range and range rate data obtained in each tracking station are transferred to the data distribution and accumulation equipment in SSOC, and are distributed to orbit determination system in non-real FTP mode and real-time socket mode.

Tracking data distributed in FTP mode are processed in orbit determination program, and estimated orbital elements are acquired. By using these estimated elements, station visibility and antenna prediction data are calculated by orbit prediction program. The prediction data are transferred to each tracking station through data distribution and accumulation equipment.

Real-time socket mode is used when Doppler data monitoring is needed. The tracking data is transferred to real-time monitor program in quasi-real-time. By monitoring the Doppler data of the spacecraft, the difference between the predicted orbit and the actual orbit can be evaluated.

The interface data orbit determination system and other systems are shown in table 12.2-1.

Data	In/Out	other system/ group
Orbital elements	O	Orbit maneuver planning system
Planned orbital elements	I	Orbit maneuver planning system
Spacecraft ephemeris	O	Science group, Operation Planning System
Station visibility	O	Science group, Operation Planning System

Table 12.2-1 Interface Data

12.2.3 Orbit Determination Program

Orbit determination program has the following functions.

(1) preprocessing of tracking data
(2) estimation of orbital elements and dynamical parameters
(3) statistical evaluation of orbit estimation result

(1) preprocessing of tracking data

The raw data transferred from tracking stations are archived and checked data quality by using Q/D flag. The data treated in this process are S-band and X-band range and Doppler data (1-way and 2-way).

(2) estimation of orbital elements and dynamical parameters

By using preprocessed tracking data, orbital elements and some dynamical parameters are estimated. In this process, tracking data are corrected for following items.

- station delay and spacecraft transponder delay
- tropospheric and ionospheric refraction

The adopted filtering methods are least-square batch filter and batch sequential filter.

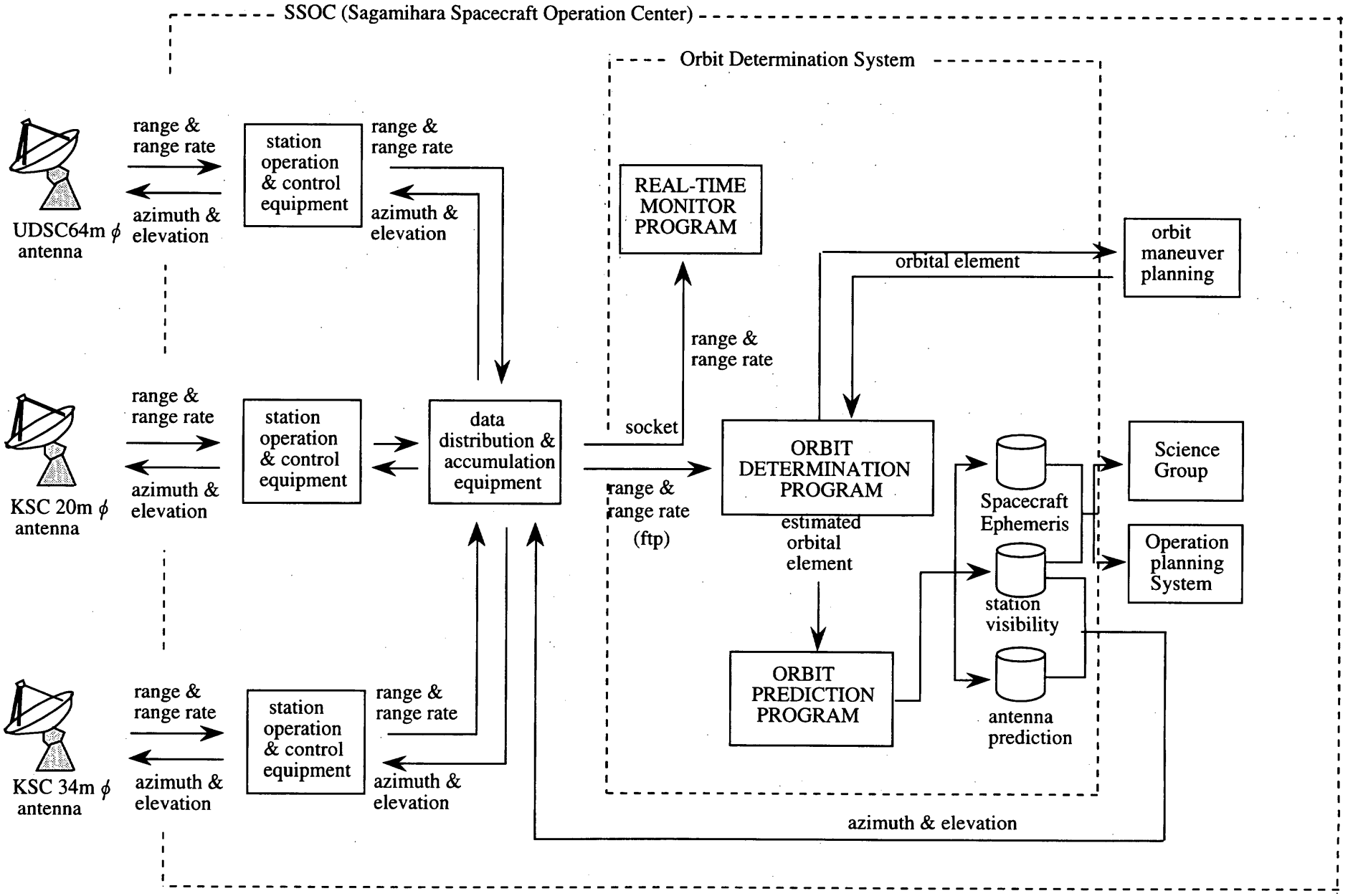

FIG.12.2-1 Orbit Determination System Data Flow

(3) statistical evaluation of orbit estimation result

Orbit determination program calculates statistical information, such as rms of observation data residual and a posteriori covariance matrix, using the final iteration result of orbit determination process.

12.2.4 Orbit Prediction Program

The function of orbit prediction program is as follows.

(1) generation of spacecraft trajectory
(2) calculation of visibility information from tracking station
(3) calculation of antenna prediction data

(1) generation of spacecraft trajectory

Using the orbit estimation result, ephemeris of the spacecraft is calculated (2) calculation of visibility information from tracking station

Using the spacecraft ephemeris, visibility information is calculated. In this calculation, occultation by Mars is also considered as well as the station AOS and LOS.

(3) calculation of antenna prediction data

After the calculation of visibility information, predicted azimuth and elevation angles in the station are evaluated. The predicted range and range rate data with considering the propagation time of light are also obtained.

12.2.5 Real Time Monitor Program

The objective of this program is to display the difference between observable and calculated values of tracking data (O-C) in real time, and to support the guidance and control to the spacecraft at the orbit and attitude maneuvering.

The function of real time monitor program is as follows.

(1) calculation of predicted Doppler data
(2) quasi-real time preprocessing of Doppler data
(3) calculation and data display of (O-C) data
(4) evaluation of maneuver delta velocity based on Doppler data

(1) calculation of predicted Doppler data

Using the planned orbital elements, ephemeris of the spacecraft is calculated. Using this spacecraft ephemeris, predicted Doppler data are calculated with considering some observational correction such as atmospheric refraction.

(2) quasi-real time preprocessing of Doppler data

Real-time Doppler data transferred from the data distribution equipment are checked data quality.

(3) calculation and data display of (O-C) data

The monitor program displays observed Doppler data, predicted data, and the difference between them in quasi-real time.

(4) evaluation of maneuver delta velocity based on Doppler data

Using the observed Doppler data and (O-C) data, line-of-sight delta velocity at the orbital maneuver are evaluated.

12.3 Operation Planning System

H. Hayakawa (ISAS)
Fujitsu, Co. Ltd.

12.3.1 Introduction

Operations of satellites have become increasingly complicated in recent years with the following background:

(1) a reception of telemetry data at the ground stations abroad,
(2) cooperative operations by many scientists of scientific instruments onboard satellite,
(3) an increase of dangerous commands related to high voltage and attitude/orbit control system,
(4) conflicts of operation tracking facilities among a number of satellites, and
(5) especially for a deep space mission, a retarded time effect of command/data transmission arising from a long distance from the earth.

Intelligent Satellite Control Software (ISACS) will be developed to help the operators to make the operation /command planning at ease. The ultimate goal of the ISACS, which system is now in operation in both AKEBONO and GEOTAIL missions at ISAS, is to make the satellite operation automatically. The ISACS can generate an Operation Program (OP) and real-time command procedures.

Another purpose of the ISACS is to realize a highly reliable satellite operation by introducing the Artificial Intelligence (AI) technologies. Main features of the ISACS system as follows:

(1) the ISACS system supports the satellite operation planning and trouble shooting,
(2) the operators who do not have much expertise in satellite operations can plan operations at ease,
(3) the ISACS prevents the operators from sending mis-commands,
(4) the ISACS provides a software to conduct simulations on the electrical state of the satellite, and check the consistency of command plans, and
(5) the knowledge database in the ISACS system is accumulated and to be improved during the course of real operations.

The basil role of the ISACS-PLN (ISACS planner) for the PLANET-B mission is summarized as follows:

(1) A command procedure, which controls overall operation of the satellite, is generated using the ISACS-PLN system running on a workstation.
(2) The ISACS-PLN generates the operation plan based on all the available information such as a ground station schedule, orbit information, requests from PIs, and electric power condition. It checks the consistency of the plan, and then converts it to command codes.
(3) A command file is converted and transferred to the satellite commanding facilities for the actual operation.

12.3.2 Basic Functions of ISACS-PLN

The final target of the ISACS-PLN system is that operation/command procedures can be automatically produced on the basis of the knowledge database which will be prepared by

the experts of satellite operations. The functions of the system will support the following items in the PLANET-B mission:

(1) Schedule Making

It generates

- Observation plan and observation mode,
- TLM data reception and occultation measurement plan,
- DR operation plan,
- Ranging plan,
- Shadow time operation plan,
- Command (real-time command procedure and OP procedure) plan, using the following input items,
  - Requests from orbit control system,
  - Requests from attitude control system,
  - Requests from common instruments (CIs),
  - Requests from scientific instruments (SIs), and
  - Operation schedule of the tracking stations.

(2) Simulation

It checks the power consumption of the spacecraft to ensure the safety of operations.

(3) Command Check

To ensure the safety of the spacecraft operation, it carries out the following checks,

- Basic logic,
- Prohibited commands, and
- Consistency of requested items and restricted items.

(4) Command Conversion

After the confirmation of the safety of planned operations, those commands are automatically converted to the real-time command procedure and the operational program (OP) and are sent to the spacecraft operation facilities.

(5) Operation / Command Plan Update

Both the operation plan and the command procedures can be easily modified on the screen when it is necessary to change the original plan. It is required to conduct the simulation check again on a new command plan whenever the operation or command procedure is modified.

(6) Control Parameter Management

The control parameters to manage the operation/command plan can be easily updated.

(7) Display and List Output

The following information can be easily displayed on the screen and be printed;

- Orbit information,
- Operation plan,
- Real-time command procedures and operation program (OP),
- Simulation and check results, and
- Visible time of ground tracking station.

12.3.3 General Rule of Command Usage

In operating the PLANET-B spacecraft, some rules are defined in the command usage to make a command planning easier and safely.

Time-tagged commands (commands with a tag of execution time) will be used for the following operations;

(1) OP-start,
(2) Mode change to Safe Hold mode,
(3) ΔV maneuver, and
(4) A part of Extension operations.

Time-tagged commands are not available for SI operations.

Real-time commands (commands that are executed on their receipt at spacecraft) will be used for the following operations;

(1) OP/OG/BFM/RAM upload/verification operations,
(2) Data dump operations for MIC, MDC, and WFC,
(3) Parameter-set operations for SI observation, and
(4) Instrument check during the near-earth orbit.

Any command request from authorized PIs which gives rise to a change in the spacecraft power consumption will be prohibited except for instrument check during the near-earth orbit.

OP (operation program) is a program (series of OGs) running in the command handling system onboard the satellite, which executes each OG sequentially at a specified time. OP will control the satellite operation modes listed below;

(1) Data recorder (DR) mode,
(2) Transmitter/antenna mode,
(3) Heater control system mode,
(4) Power system mode,
(4) Scientific instrument (SI) mode, and
(5) Orbit/attitude control mode.

OG (organized command) consists of a group of DCs and BCs that are to be executed at one step of an OP. An OG command can be also issued as a single real-time command. One OG may be shared with several SIs. In PLANET-B, OGs will be classified into the following three categories;

(1) OGs for standard operations (maintained by the authorized supervisors)
- OP-Start/Stop,
- Shadow, Earth pointing attitude control and Eclipse operations,
- Tracking Start/End at UDSC/DSN stations,
- Periapsis and other standard operation mode,
- Data Recorder (DR) management,
- Edition format / bit rate change and broadcasting of TI, and
- SI-ON/OFF and onboard RAM upload/verification.

(2) Event OGs (maintained by the authorized engineering group)
- ΔV maneuver,
- Extension control, and
- Attitude control.

(3) OGs for SI operation on requests (maintained by authorized science group)
- Instrument check, and

• Temporal operation requests.

Real-time-OGs are not available for the PIs' request through an ORL. Authorized PIs can make a request of the category-3 OGs for an OP operation by using an ORL.

12.3.4 General Rule of Spacecraft Operation

Data Recorder(DR) is planned to record data when the spacecraft is invisible from the ground station. When the spacecraft is visible from the ground stations, recorded data are reproduced, in principle, through the X-band telemetry. Since DR has a capability to simultaneously record and reproduce the telemetry data, highly sophisticated operation will be made to realize a continuous acquisition of scientific data. The limitation of DR operation is as follows:

(1) In principle, it is prohibited to use the DR when TMX is unavailable. Real-time HK data can not be monitored while the DR data are being reproduced through TMS.
(2) AOCS data are planed to be recorded into the DR during the ΔV maneuver or attitude control operation, even when UDSC visible time.
(3) It is prohibited to reproduce the DR data during overloading operation mode, eclipse mode and attitude control operation.

The standard operation during the Usuda Deep Space Center(UDSC) visible time are listed below;

(1) Communication system control,
(2) Instrument health check,
(3) DR data reproducing,
(4) Occultation (radio science) measurements,
(5) OP/OG upload/verification, and a preparation of time-tagged command for OP start,
(6) Monitoring during the earth pointing attitude control,
(7) MIC/MDC/WFC data dump operation, and
(8) Real-time observations after the DR data reproducing completion.

Supports from Deep Space Network(DSN) stations are discussed as listed below;

(1) Ranging/Orbit determination support before the critical ΔV maneuver operations, and
(2) Occultation (radio science) measurements.

In each of mission phases, operations of common/scientific instruments have restrictions as listed below:

(1) Earth orbiting phase
  • CI control is the main purpose.
  • TMX operation is unavailable.
  • Real-time operation is available using the TMS.
  • It is prohibited to use the DR except for orbit/attitude control operations.
  • MDC will be set in operation whenever the thermal condition permits.
(2) Mars transfer phase (Solar pointing):
  • Same as the earth orbiting phase.
  • SI observation is managed during UDSC visible time.
  • Satellite may be controlled autonomously for several days with one OP.
(3) Mars transfer phase (Earth pointing):

- TMX operation may be available. DR operation may also be available.
- Step-by-step changes of SI observations are planned from real-time operation to default operation.
- Satellite may be controlled autonomously for about one week with one OP.

(4) Mars orbiting phase (Standard operation):
- According to observation mode, such as 'pre/post-penumbra' and 'preheat of thruster before attitude control', several default operation modes are to be prepared.

(5) Mars orbiting phase (Shadow operation; power saved operation mode):
- The battery should be fully charged before penumbras.
- Depending on the shadow rate or the amount of generating power, a preheat operation and/or a power-off of some instruments is considered.
- Special attention should be paid when shadow, occultation and/or periapsis occurs at the same time. Details are to be discussed.

(6) Mars orbiting phase (Periapsis operation; overloading operation mode):
- According to observation mode, several default operation patterns are to be prepared.
- It is prohibited to reproduce the DR data using the TMX when the power consumption has to be saved.
- Special attention should be paid when shadow, occultation and/or periapsis occurs at the same time. Details are to be discussed.

(7) Mars orbiting phase (Occultation measurements; radio science observation):
- Radio science observation is carried out during UDSC visible time and, if possible, during DSN visible time.
- Observation data from other instruments are recorded into the DR.
- Special attention should be paid when shadow, occultation and/or periapsis occurs at the same time. Details are to be discussed.

12.3.5 Command Planning Procedure

Standard operation plans for spacecraft operations are generated with the ISACS-PLN system. Operators in duty and ISAS supervisors are responsible for the generation of the spacecraft operation plan. The standard procedure of the command planning is as follows:

Generation of Default Operation Plan

First, operators in duty and ISAS supervisors decide the start and end time of the command planning. In principle, they should make plans about 7 days prior to the stop-time of OP which is running on the spacecraft. The start time of a new OP should be set just before the stop-time of the OP running currently on the spacecraft. The time coverage of the new OP is typically one week. Real-time command procedures for the UDSC visible time operations covers about 10 days from about 3 days prior to the start-time of the new OP to its end-time . With the most recent ancillary data such as orbit information and an operation schedule of the ground station, operators in duty and ISAS supervisors make a default operation plan by using the ISACS-PLN system. The ISACS-PLN system generates real-time command procedures and an OP procedure. Operators in duty and ISAS supervisors can modify the plans generated by using the file-edition function on the ISACS-PLN, if necessary.

The default operation plan except for ΔV maneuver operation is defined with DORL (Default ORL) and is managed by ISAS supervisors. Since the logic for generating a

command sequence will not be fixed at the initial phase of PLANET-B operation, a command plan will be made under consideration and check of the satellite status. After operation sequences become stable, the logic for generating command sequences is registered in the ISACS-PLN. The command sequences generated from this logic is called 'Default operation plan'.

Reception of Temporal Command Requests

A new command plan thus generated is sent to the "Command Request Workstation" together with the ancillary data. The authorized PIs and Co-I can make an access to the Command Request Workstation to see a new plan. They can make temporary requests for scientific instrument operations, by submitting them with the ORLmars format. Of course, temporal requests must be submitted well before the start of the new operation plan. The pre-compile environment is available on Command Request Workstation to avoid any language errors in submitting request. Once they find the their request is free from any errors, the request is automatically sent to the ISACS-PLN system.

ORLmars stands for Operation Request Language for mars observation. This language provides the authorized PIs with a simple and re-usable environment in making a temporal request for scientific instrument operations. The specification of ORL is described in detail in 12.3.6. The ISACS should be aware of all the commands sent to the satellite in order to maintain the consistency of the operation. All the temporal requests, both for OP and real-time commands, should be submitted from authorized PIs and Co-Is in the ORL format and compiled by ISACS, even a single step of a real-time command.

The operation request other than the default operation plan is called 'a temporal operation request'. A temporal operation request from each PI should be written in ORLmars and sent to the ISACS-PLN through the network. Each PI can make request only for individual commands in real-time operations and for OGs in OP operations. Requests of real-time OG are prohibited.

Merge of Temporal Command Requests and Default Plan

Operators in duty and ISAS supervisors merge temporal command requests and default plan to generate the final operation plan. The ISACS-PLN system checks the consistency of command plans thus generated. It also checks the power consumption of the space craft whether the final operation plan is safe or not from the power system viewpoint. If there are any consistency or dangerous operation, the ISACS-PLN make a warning to the operators in duty. In this case, they have to modify the final operation to ensure the safety of the spacecraft operations. The modification may include a rejection of temporal command requests. Thus, each PI must check the result of the final operation plan, which is available on the Command Request Workstation. If an command request is rejected, it may be adjusted by discussing with operators in duty.

12.3.6 ORLmars

This section describes the specification of the command request language, ORLmars (Operation Request Language, mars), for the Planet-B satellite. ORLmars is designed to provide easy and error-free environment for requesting OP or real-time commands for each instrument on-board PLANET-B. It has a simple, coherent structure and enables to prepare reusable source files for similar types of commanding. The Intelligent Satellite control system for planninng (ISACS-PLN) checks and compiles ORL files to assure the consistency and

safety of the commanding.

In this section, words have the following meaning unless indicated otherwise:

- UPPER CASE : Keywords/Reserved words.
- lower case : user defined words, strings. Words consists of ASCII characters without control codes.
- num/n : decimal numbers.
- xx/x : hexadecimal numbers.
- [aaaa, ...] : parameters inside [...] can be omitted.
- < A | B > : 'A' or 'B'

12.3.6.1. Scope of ORLmars

Target System

ORLmars is designed only for the command planning system (ISACS-PLN) for PLANET-B.

Commands to Handle

ORLmars handles the following command requests:

- Command requests of PIs for Individual Operations (Real-Time Command)
- Command requests of PIs for Organized Operations (OP)

Timing for Command Requests

All requests should be sent to ISACS-PLN in ORLmars format sufficiently prior to the time of actual commanding (with exception of a case of emergency).

Authority

Requests in ORLmars can be made only by the authorized PIs (Principle Investigators) of the PLANET-B projects.

12.3.6.2. Specification of ORLmars

12.3.6.2.1 Block

A file of ORLmars consists of the following four blocks:

(1) Header Block
(2) Command Sequence Block
(3) Start Time Block
(4) End-of-file Declaration

(1) Header Block

This block describes the information on the creator.

- Date of creation : Date on which the file is created. The compiler checks its format not the content. (e.g., it can be 1998/07/04).
- Name of the SI : The compiler checks its content.
- Name of the creator : Should be the contact person in case.
- Comments : If in need. Not necessary.

(2) Command Sequence Block.

This block defines the actual command sequence to execute. The command sequence is defined by:

- Command codes (command name alone, or command name + BC Hex codes)
- Comment (massage-to-operator)
- Name of OGs
- Time interval

(3) Start Time Block

This block specifies the time to execute the commands.

(4) End-of-file Declaration

The compiler ignores anything after this declaration.

12.3.6.2.2 Format

(1) Block declaration

Each of blocks defined in the previous subsection has the following block declaration.

DEFINEBLOCK :: (DEFINEBLOCK = Reserved word defines a block)

(2) Format for each definition

1) Simple Definition

Starts with a Keyword, ends with a semicolon (;). There are three types of Simple Definitions.

(a) Type 1 KEYWORD : name operation [operation...] ;

(b) Type 2 KEYWORD : operation ;

(c) Type 3 KEYWORD [:] ;

2) Complex Definition

Starts with a keyword, followed by Simple or Complex definitions in braces ({...}).

```
KEYWORD : name  {
                  Simple/Complex definition
                [ Simple/Complex definition ]
                        :
                        :
        }
```

where KEYWORD : A keyword to specify what to define.
name : Identifier for the definition. (Name of this sequence).
operation : Operations to execute.

(3) Comments

Characters within a pair of /* and */ are treated as comments, i.e. ignored by the compiler. Comments can be nested (Number of /* must be equal to that of */).

(4) Blank lines

Blank lines (a line with a semicolon (;) character only) can be placed anywhere in the ORL file.

12.3.6.3. Descrption

12.3.6.3.1 Header Block

An ORLmars file must start with a Header information block (comments can precede the header). A Header Block starts with the header declaration, which is:

HEADER_BLOCK ::

Header Block contains the following four items.

(1) Date of creation

DATE date of file creation (necessary)

< Format > Type 2 of Simple Definition

DATE : yyyy/mm/dd[.hh:mm] ;

< Example >

DATE : 1999/12/24.21:00 ;

< Notes >

1) The header block must contain one and only one of this statement.

2) This statement must be at the top of the block (with exception of comment).
3) The compiler checks only the format of the statement, not the content (can be 1776/07/04, for example).
4) The date and time in this statement must be in GMT (UT), not local time.

(2) SI Name

SI	SI Name (necessary)

< Format > Type 2 of Simple Definition

SI : si-name ;

< Example >

SI : MGF ;

< Notes >

1) The header block must contain one and only one of this statement.
2) This statement must come next to the Date statement in the Header Block (with exception of comments).
3) The SI name must be the name of the smallest unit that can submit the ORL. For example, it must be MGF, not MPM (the component which consists of MGF, PET, MST, and UVS).

(3) Creator Name

AUTHOR	Author-name (necessary)

< Format > Type 2 of Simple Declaration

AUTHOR : author-name ;

< Example >

AUTHOR : "Arnold-Schwalznegger!!"

< Notes >

1) The header block must contain one and only one of this statement.
2) This statement must come next to the SI-name in the Header Block (with exception of comment).
3) The author name must be in-between two double quotation marks (").
4) Characters in the author name can be any ASCII characters except control codes (can be blanks, /*, */, ;).
5) The author name must be registered to the system. The compiler checks the name and reject the request if the author name is not registered.

(4) Comments

COMMENT (not necessary)

< Format > Type 2 or 3 of Simple Declaration

[COMMENT [: ["comments" ["comments" ...]]] ;]

< Example >

COMMENT : "This is a comment for the Mode-1 sequence ORL" ;

< Notes >

1) This statement is not necessary.
2) This statement (if exists) must come next to the AUTHOR statement.

3) This statement must be only one in a ORL file if exists.
4) The compiler ignores content of this statement.
5) The comment must be in-between two double quotation marks (").
6) Characters in the comment can be any ASCII characters except control codes (can be blanks, /*, */, ;).

12.3.6.3.2 Command Sequence Block

The Command Sequence Block must be located next to the Header Block. The Command Sequence Block starts with the following declaration.

SEQ_BLOCK ::

The Command Sequence Block is defined with following Keyword.

DEFSEQ (REAL)	Definition of a Real-Time-Command-Sequence
DEFSEQ (OP)	Definition of an OP-Command-Sequence

< Format > Type = Complex Definition

```
DEFSEQ (REAL) : sequence-name {
                    < CMD : command-name [ BC-code [ BC-code ... ] ] |
                        C. : "message-to-operator" > ;
                    [ < CMD : command-name [ BC-code [ BC-code ... ] ] |
                        C. : "message-to-operator" > ; ]
                                :
                                :
}
DEFSEQ (OP) : sequence-name {
                    < OG : OG-name |
                        C. : "note for OP sub-plan" > ;
                    [ < OG : OG-name |
                      INTERVAL : n |
                        C. : "note for OP sub-plan" > ; ]
                                :
                                :
}
```

< Description >

sequence-name	: Gives the name of the sequence. The sequence is called by this name in the Start Time Block.
CMD	: The keyword for commands.
command-name	: Name of the command in SIB.
BC-code	: Parameter BC codes; should be in two hexadecimal number. example) "2F", "14" etc. (No need for the prefix "0x")
C.	: The keyword for comments.
OG	: The keyword for OGs.
OG-name	: Name of the OG.
message-to-operator	: A comment to be appeared on the operating console on execution. For the purpose to make a remark to the operator.
INTERVAL	: The keyword for intervals.
n	: Time interval in seconds.

< Exmaple >

```
DEFSEQ (REAL) : DR_REP_16K_SEQ {
        C. : "Set 16K Rep." ;
    CMD : DHU_FMT_DR_REP1_16K ;
        C. : "Reproduction start" ;
    CMD : DHU_REP_MODE_ON ;
    CMD : DR_REP ;
}
DEFSEQ (REAL) : ATOG_SET {
    CMD : DHU_ATOG_SET 00 01 ;
}
DEFSEQ (OP) : DR_RESET_and_REC_START_SEQ {
    OG : DR_RESET ;
    INTERVAL : 15 ;
    OG : DR_REC_START ;
}
```

< Notes >

1) Sequence names should be all in readable ASCII characters (should not include control codes).
2) Duplicate definition of one sequence name is prohibited. (All the sequence name must be unique throughout REAL and OP groups).
3) Individual commands and comments are available for a real-time-command-sequence , while Ogs and comments are available for an OP -command-sequence
4) Definition of real time sequences must precede that of OP sequences. (Real time sequences shouldn't come after the OP sequences.)
5) Maximum number of sequences is 5000.
6) Time interval must be 1 or multiple of 15. Upper limit of the time interval is 3825. Given a number other than above:
    a) a number larger than 3825 is regarded as 3825;
    b) a number smaller than 15 is regarded as 1;
    c) a number other than these is regarded as the maximum multiple of 15 that does not exceed the given number.
        example) 13 -> 1, 44 -> 30, 4000 -> 3825
7) A time interval must not come right after another time interval. If one wish to have two continuous time intervals, NOP (No Operation) OG should be placed between the two.
8) A series of OGs without time intervals will be executed with the minimum time interval (interval 1) between each two commands.
9) Up to six OGs can be executed with the minimum interval (interval 1) at one time.

12.3.6.3.3 Start Time Block

Defines the time to execute the command sequences. Start Time Block must follow the Command Sequence Block. Start Time Block starts with the following declaration.

START_BLOCK ::

The Start Time Block is defined with following Keyword.

START	Specifies when to start the sequence.

< Format > Type = Complex type

START : sequence-name yyyy/mm/dd.hh:mm:ss ["message-to-operator"] ;

< Description >

sequence-name : Specifies the name of a sequence to execute. This name is defined in the Command Sequence Block.

yyyy/mm/dd.hh.mm.ss : Date and time to start the sequence. Time is defined in the satellite event time.

< Example >

START : ATOG_SET 1998/11/15.19:15:00 ;

< Notes >

1) There must be at least one START statement in the Start Time Block.

12.3.6.3.4 End-of-file declaration

The end-of-file declaration must be next to the Start Time Block. The end-of-file declaration is

```
EOF ::
```

< Notes >

1) There must be one and only one end-of-file declaration in an ORL file.

2) The compiler ignores anything after this declaration.

12.3.6.3.5 Comments

Characters within a pair of /* and */ are treated as comments, i.e. ignored by the compiler. Comments can be placed anywhere in the ORL file and have no effect on the result of the compilation. Comments can be nested (Number of /* must be equal to that of */).

12.3.6.4. Example of ORLmars

```
HEADER_BLOCK ::
    DATE : 1998/07/04 ;
    SI : MGF ;
    AUTHOR : "PI-of-MGF" ;
SEQ_BLOCK ::
    DEFSEQ (REAL) : MGF-PET-MODE-SET {
        CMD : MGF_PET_MODE_SET 08 ;
        C. : "PET Drive-ON" ;
    }
    DEFSEQ (OP) : OP-MGF-PET-ON {
        CMD : OG_MGF_PET_ON ;
        C. : "MGF/PET ON" ;
    }
START_BLOCK ::
    START : MGF-PET-MODE-SET yyyy/mm/dd.hh.mm.ss "PET Drive-ON" ;
    START : OP-MGF-PET-ON    yyyy/mm/dd.hh.mm.ss "MGF/PET ON" ;
EOF ::
```

12.4 Operation Supporting System

Masashi Hashimoto, Akinari Choki(ISAS)
Fujitsu Limited

ISAS has developed an operation support system called Intelligent SAtellite Control Software (ISACS) to operate spacecraft properly and safely. ISACS has two main functions: ISACS-PLaNner (ISACS-PLN) and ISACS-DOCtor (ISACS-DOC). ISACS-PLN is an automatic command planner with expert technique. ISACS-DOC is a real-time monitoring expert system with a diagnostic function. ISACS has been developed and applied to GEOTAIL operation since 1992. ISACS-DOC for PLANET-B is developed based on the many useful experiences obtained by ISACS-DOC for GEOTAIL. We learned the following from the GEOTAIL ISACS-DOC operation.

1. The next system should be accessible to many kinds of useful information sources like ground tracking facilities, trajectory files, and so on, as well as the spacecraft itself. This will be effective in improving diagnostic reliability.

2. A method should be established to integrate useful knowledge efficiently and prioritize important items of abnormalities for the operation. This matches the introductory purpose of the system.

3. Important items in operating and monitoring should be reflected on the spacecraft design. The next system needs to actualize a comprehensive monitoring system.

4. Highly confident results of diagnosis should be presented. The diagnostic knowledge for the next system should avoid creating unnecessary concerns for the satellite operators.

The details of ISACS-PLN for PLANET-B are described in 12.3. ISACS-DOC for PLANET-B has following features.

1. A new diagnostic expert tools package which runs on the Microsoft®Windows®95 environment is used to match the latest computer architecture.

2. ISACS-DOC diagnoses whole areas of PLANET-B every 3~5 minutes automatically during real-time operation.

3. The diagnosis covers almost all areas of the communication system, the electrical power system, the thermal control system, the data handling system, the attitude and orbit control system, and also ten scientific instruments in PLANET-B.

4. The ISACS-DOC consists of two hardware systems, one is a SPARK Work Station (S-4/5H-170) and the other is a PC (FMV620T5C7). Their functions are adjusted as follows:

   - The SPARK Work Station only handles an on-line data feeding function.

   - The on-line data feeding function automatically reads following data through the ISAS new network system:
     - latest real-time telemetry data,
     - predictive orbit data (R, RR, umbra information and etc.),
     - attitude data (θe, θs and etc. obtained by the ADS/ADQL system), and
     - some of the ground computer system's status/data (AGC, ground antenna status and etc. obtained by the station control system).

   - The Satellite Information Base (SIB) file which defines position of telemetry frames and words, the threshold values, and the equations for decoding the data to physical values, is refereed to obtain physical values, and the diagnostic information file is output.

- The diagnostic information file is automatically transferred to the diagnosis function on the PC.

- The PC handles three functions: the knowledge database editor, the inference engine, and the knowledge database.

- Predictive receiving level of communication system is calculated from the approximate functions of θe and direct range between the Earth and PLANET-B.

- The threshold levels, for examples, the phase of 'sunlit', 'umbra' and 'pre/post umbra', can be separately defined in the knowledge database depending on the characteristics of PLANET-B operation.

- These different threshold levels are automatically switched depending on the satellite status.

- The useful information can be monitored graphically on the screen when some abnormal status is found.

5. The details of the abnormality are displayed on the following six different window screens for:
   - results of the diagnosis,
   - explanation of the abnormality,
   - normal status/values of the satellite,
   - actual status/values causing the abnormality,
   - useful figures, and
   - graphical data.

Figure 1 shows data flow of ISACS-DOC, and Figure 2 and 3 show examples of windows screen.

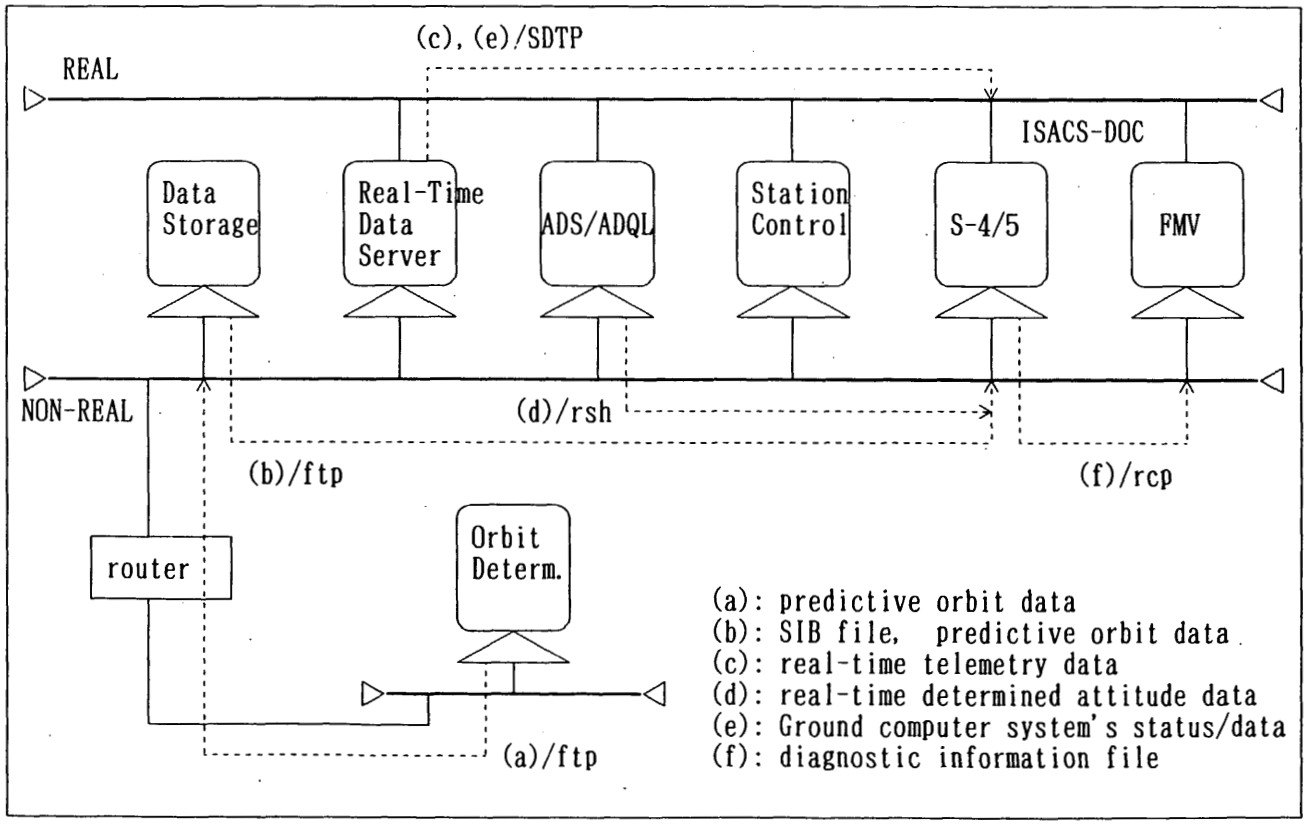

Figure 1 Data flow of ISACS-DOC

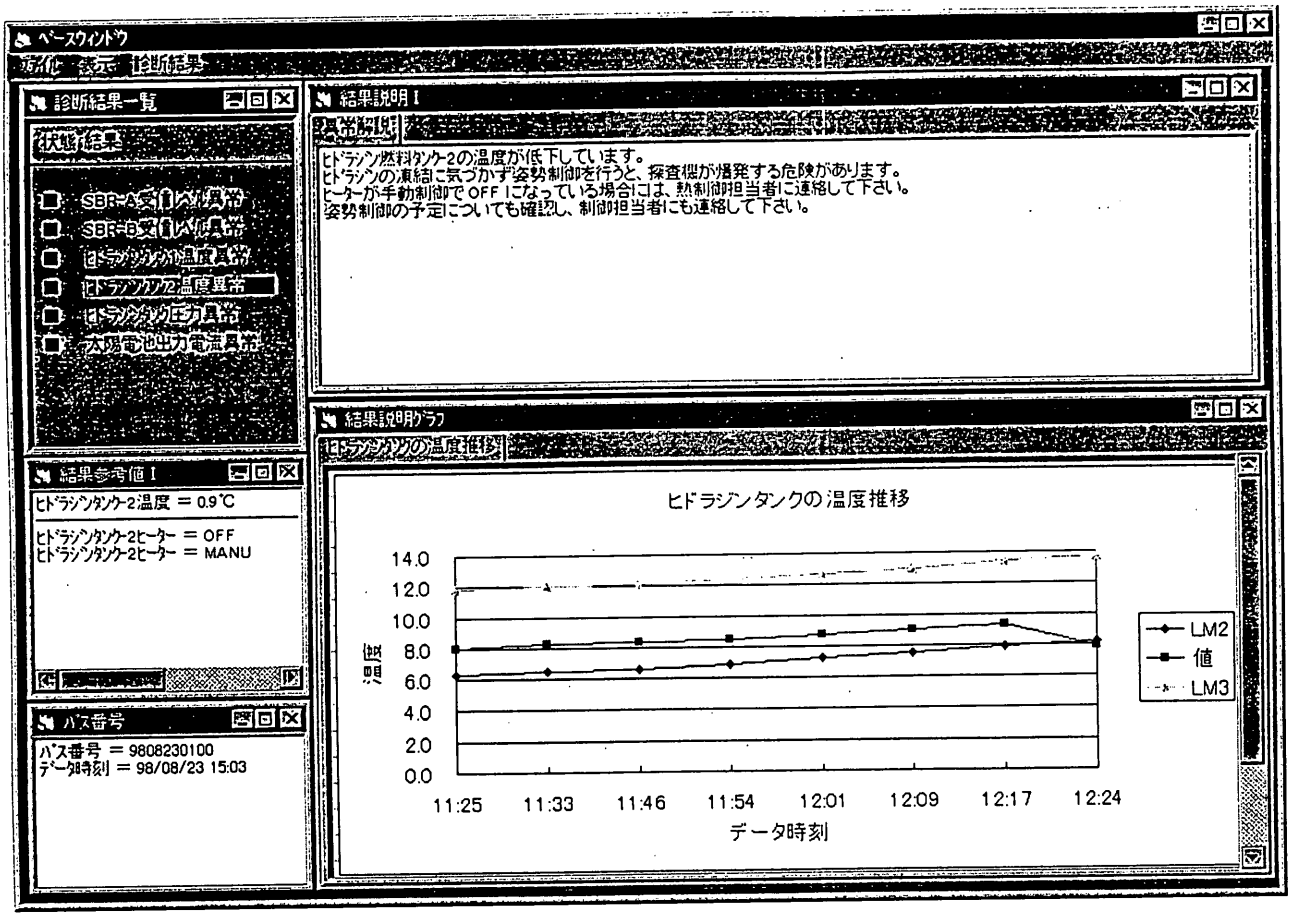

Figure 2 Example of Window Screen for Results of the diagnosis (1)

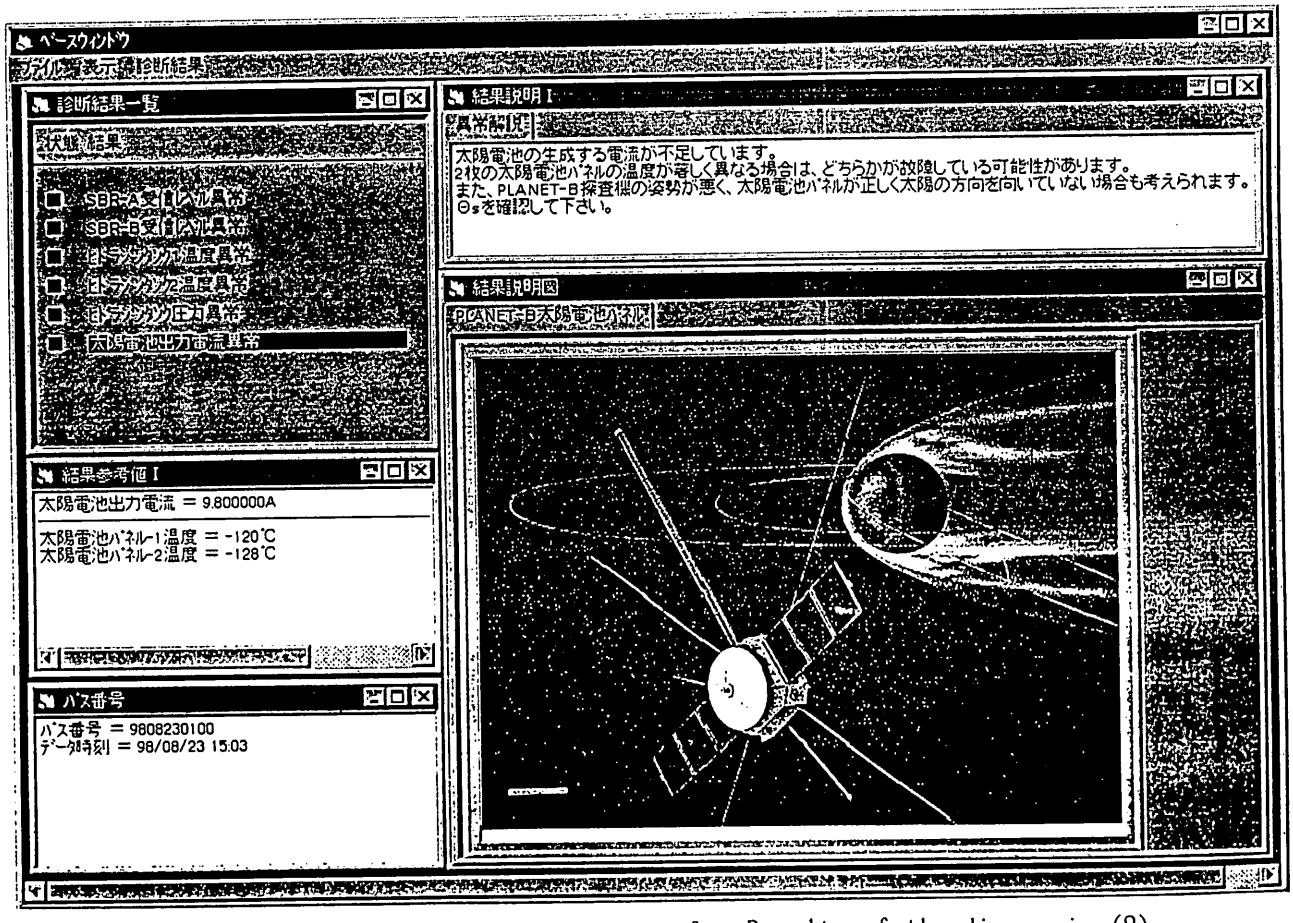

Figure 3 Example of Window Screen for Results of the diagnosis (2)

12.5 Data Archive and Ground Data Handling System for Scientific Instruments

H. Hayakawa (ISAS)
Fujitsu, Co. Ltd.

12.5.1 Network Configuration

Network configuration for Planet-B operation and data archive is shown in Figure 12.5-1. Both real time and stored telemetry data is available through internet.

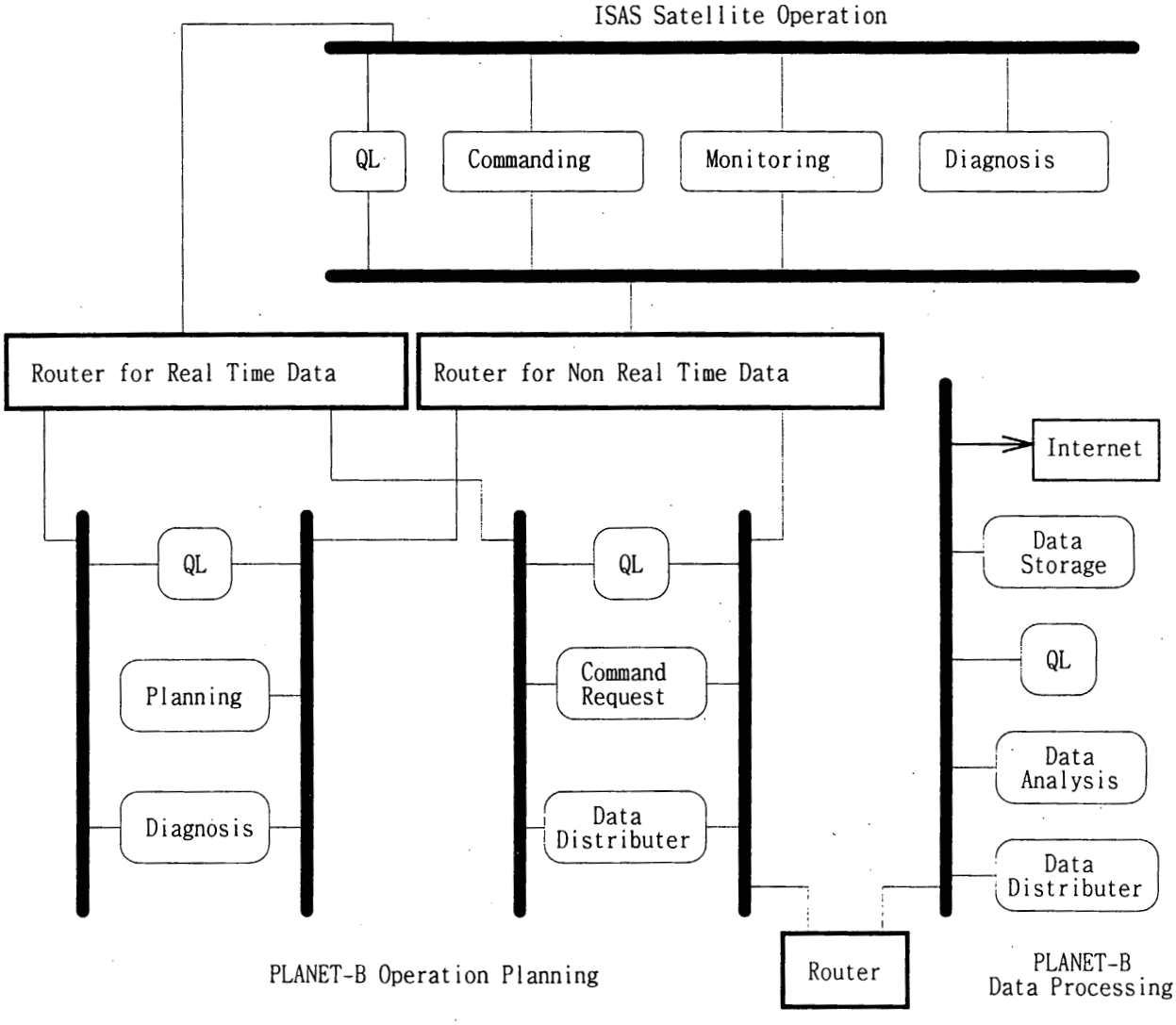

Figure 12.5-1 Network configuration for Planet-B

12.5.2 Telemetry Data Flow in a Real-Time Operation

Figure 12.5-2 schematically shows telemetry data flow. Real time data monitoring is available by connecting data diatributer in PLANET-B Project network.

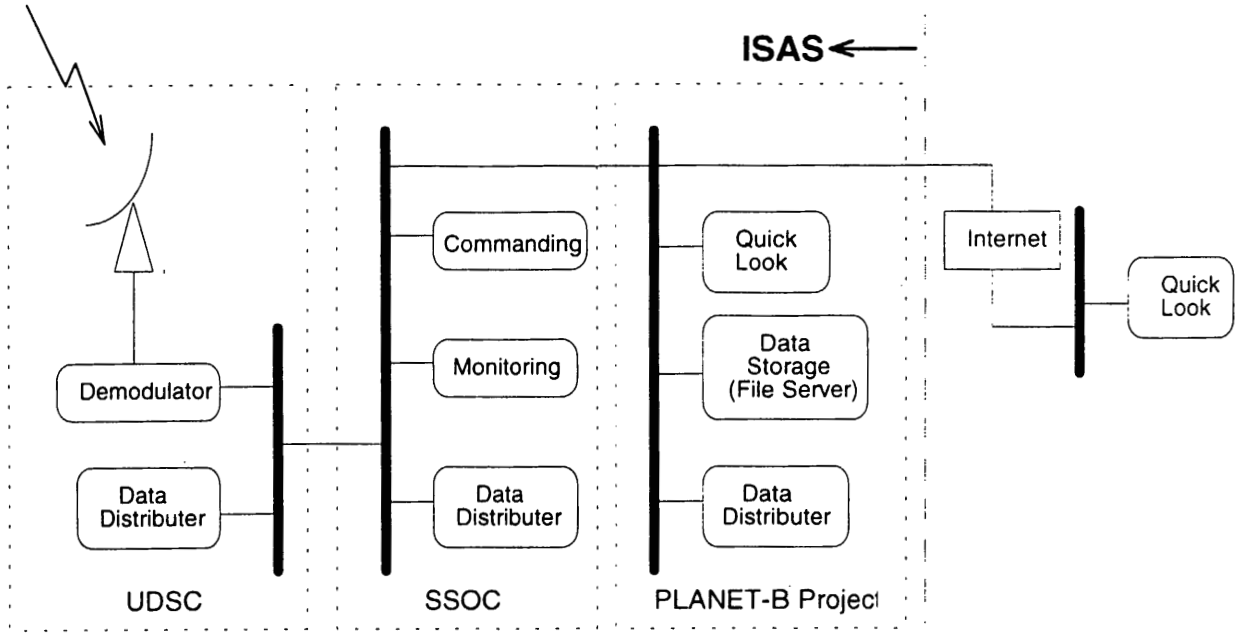

Figure 12.5-2 Telemetry Data Flow in a Real-Time Operation

12.5.3 Contents of the PLANET-B File Server

Planet-B file server keeps following data:

Raw Telemetry Data (or Time corrected Telemetry Data)

Orbit Information (both datermined and planned)

Attitude Information

Science Data Base

12.5.4 Science Data Base (SDB)

Science data base (SDB) is binary data files used for data analysis. For easiness of analysis using multiple instruments data, science data for each instrument uses same time intervals as much as possible. Each PI is responsible to generate his/her instrument's SDB. Current specification for Science Data Base is as follows:

1. **Data interval in a file, Rule for file name**

- 1 SDB file contains 1 revolution data. The data starts from apoapsis data.
- File name(8 letters) shows date of apoapsis time and version number. File

extention (3 letters) show instrument ID.

e.g. YYMMDDXX.SDB

YYMMDD:	Date of apoapsis
XX:	Version No.
SDB:	Instrument ID

· Table for data start date (i.e. file name) is required.

2. **Data format**

· First record is **headder record** (fixed length for each instrument).
· Other records are data records.

· Headder record contains start time, instrument ID (3 letters), and version number **with ASCII code** at the top of record. Start time and instrument ID is separated by a space.

e.g. YYMMDDHHMMSSΔSDBXX

YY:	year
MM:	month
DD:	date
HH:	hour
MM:	minute
SS:	second
SDB:	instrument name
XX:	version number

· Data records has a **fixed record length**. (Can be different from length of headder record.)
· All the data should be **binary integer**.
· Top 4 bytes of data record should be **time data with msec** unit.
· Time data should increase monotony. i.e. When date is changed in a file, time data for latter date should have 86400000 offset.
· Time data is followed by instrument's physical data.
· Physical data should **normalized in integer format**.
· Format for the physical data is determined by each instrument.

3. **Contents of Data**

· For spin synchronized sequential data, such as magnetic field data and plasma moment data, spin averaged data is used. IP timing is used as data time. This policy is also applied to distribution function data.
--------Time tag table is required for each spin.

- For wave data, observation time is used as data time.
- For dust counter data, event time is used as data time.
- For image data, capture timing is used as data time. Data format may different from policy described above.
- Data record contains instrument status data if necessary.
- Data record do not include additional information such as orbital parameters.
  --------Utilitis for get additional parameter from time data will be prepared.

Examples:

MGF

YYMMDDHHMMSS_MGF00(18)							
Time(4)	Bx(2)	By(2)	Bz(2)	RMS-X(2)	RMS-Y(2)	RMS-Z(2)	Flag(2)

MIC

YYMMDDHHMMSS_MIC00(18)	
Time(4)	Image Data (256 x 256) + Flag (?)

Table A-1 Edition Formats

FORMAT No (HEX)	OPERATIONAL MODE	Number of packets in a packet repetition pattern																REMARK
			Common Instruments							Scientific Instruments								
		Total	HK	AOCE	DHU	PCD	TCI	DR	HCE	PSA	PWA	MPM	MIC	TPA	IMI	NMS	MDC	
00	N/A																	
01	Launch	64	2	26	0	0	36	0	0	0	0	0	0	0	0	0	0	S-BAND ONLY
02	AOCS (Maneuver)	64	8	56	0	0	0	0	0	0	0	0	0	0	0	0	0	
03	Extension [MST]	64	8	32	0	0	0	0	0	0	0	24	0	0	0	0	0	MST Extension
04	Extension [WANT]	64	8	32	0	0	0	0	0	0	24	0	0	0	0	0	0	WANT Extension
05	Deployment [TPA]	64	8	32	0	0	0	0	0	0	0	0	0	24	0	0	0	TPA Boom Deployment
06	spare																	
07	Program Dump	64	8	0	56	0	0	0	0	0	0	0	0	0	0	0	0	Memory dump (BFM&S/S RAM)
08	AOCE Program Dump	64	8	56	0	0	0	0	0	0	0	0	0	0	0	0	0	AOCE Memory dump
09	HCE	64	8	0	0	0	0	0	56	0	0	0	0	0	0	0	0	Target temperature data dump
0A	Analysis (Common)	64	16	16	32	0	0	0	0	0	0	0	0	0	0	0	0	Common Instruments
0B	Emergency 1	64	32	32	0	0	0	0	0	0	0	0	0	0	0	0	0	UVC or X-TLM Contingency
0C	Emergency 2	64	64	0	0	0	0	0	0	0	0	0	0	0	0	0	0	S/C SURVIVAL MODE
0D	spare																	
0E	spare																	
0F	spare																	
10	Observation P	64	4	0	0	0	0	0	0	12	16	8	0	8	12	4	0	Periapsis Mode
11	Observation S	64	8	0	0	0	0	0	0	12	16	8	0	8	12	0	0	Standard Mode
12	spare																	
13	UVS/XUV	64	8	0	0	0	0	0	0	6	8	32	0	4	6	0	0	UVS Mode
14	MIC	64	8	0	0	0	0	0	0	6	8	4	28	4	6	0	0	MIC-data dump Mode
15	WFC-M	64	8	0	0	0	0	0	0	6	36	4	0	4	6	0	0	WFC-data dump Mode
16	MDC	64	8	0	0	0	0	0	0	6	8	4	0	4	6	0	28	MDC-data dump Mode
17	spare																	
18	spare																	
19	spare																	
1A	spare																	
1B	spare																	
1C	spare																	
1D	spare																	
1E	spare																	
1F	spare																	

Table A-2 Packet Allocation (1/5)

*1 (FORMAT-01 :Launch)

PS No	0	1	2	3	4	5	6	7
0	HK	EPT/INS	AOCS	EPT/INS	AOCS	EPT/INS	AOCS	EPT/INS
8	EPT/INS	EPT/INS	AOCS	EPT/INS	AOCS	EPT/INS	AOCS	EPT/INS
16	EPT/INS	EPT/INS	AOCS	EPT/INS	AOCS	EPT/INS	AOCS	EPT/INS
24	AOCS	EPT/INS	AOCS	EPT/INS	AOCS	EPT/INS	AOCS	EPT/INS
32	HK	EPT/INS	AOCS	EPT/INS	AOCS	EPT/INS	AOCS	EPT/INS
40	EPT/INS	EPT/INS	AOCS	EPT/INS	AOCS	EPT/INS	AOCS	EPT/INS
48	EPT/INS	EPT/INS	AOCS	EPT/INS	AOCS	EPT/INS	AOCS	EPT/INS
56	AOCS	EPT/INS	AOCS	EPT/INS	AOCS	EPT/INS	AOCS	EPT/INS

(FORMAT-02 :AOCS [Maneuver])

PS No	0	1	2	3	4	5	6	7
0	HK	AOCS	AOCS	AOCS	AOCS	AOCS	AOCS	AOCS
8	HK	AOCS	AOCS	AOCS	AOCS	AOCS	AOCS	AOCS
16	HK	AOCS	AOCS	AOCS	AOCS	AOCS	AOCS	AOCS
24	HK	AOCS	AOCS	AOCS	AOCS	AOCS	AOCS	AOCS
32	HK	AOCS	AOCS	AOCS	AOCS	AOCS	AOCS	AOCS
40	HK	AOCS	AOCS	AOCS	AOCS	AOCS	AOCS	AOCS
48	HK	AOCS	AOCS	AOCS	AOCS	AOCS	AOCS	AOCS
56	HK	AOCS	AOCS	AOCS	AOCS	AOCS	AOCS	AOCS

(FORMAT-03 :Extension [MST])

PS No	0	1	2	3	4	5	6	7
0	HK	AOCS	MPM	AOCS	MPM	AOCS	MPM	AOCS
8	HK	AOCS	MPM	AOCS	MPM	AOCS	MPM	AOCS
16	HK	AOCS	MPM	AOCS	MPM	AOCS	MPM	AOCS
24	HK	AOCS	MPM	AOCS	MPM	AOCS	MPM	AOCS
32	HK	AOCS	MPM	AOCS	MPM	AOCS	MPM	AOCS
40	HK	AOCS	MPM	AOCS	MPM	AOCS	MPM	AOCS
48	HK	AOCS	MPM	AOCS	MPM	AOCS	MPM	AOCS
56	HK	AOCS	MPM	AOCS	MPM	AOCS	MPM	AOCS

(FORMAT-04 :Extension [WANT])

PS No	0	1	2	3	4	5	6	7
0	HK	AOCS	PWA	AOCS	PWA	AOCS	PWA	AOCS
8	HK	AOCS	PWA	AOCS	PWA	AOCS	PWA	AOCS
16	HK	AOCS	PWA	AOCS	PWA	AOCS	PWA	AOCS
24	HK	AOCS	PWA	AOCS	PWA	AOCS	PWA	AOCS
32	HK	AOCS	PWA	AOCS	PWA	AOCS	PWA	AOCS
40	HK	AOCS	PWA	AOCS	PWA	AOCS	PWA	AOCS
48	HK	AOCS	PWA	AOCS	PWA	AOCS	PWA	AOCS
56	HK	AOCS	PWA	AOCS	PWA	AOCS	PWA	AOCS

NOTE *1)"PS No" means Packet Sequence Number.

Table A-2 Packet Allocation (2/5)

*1 (FORMAT-05 :Deployment [TPA])

PS No	0	1	2	3	4	5	6	7
0	HK	AOCS	TPA	AOCS	TPA	AOCS	TPA	AOCS
8	HK	AOCS	TPA	AOCS	TPA	AOCS	TPA	AOCS
16	HK	AOCS	TPA	AOCS	TPA	AOCS	TPA	AOCS
24	HK	AOCS	TPA	AOCS	TPA	AOCS	TPA	AOCS
32	HK	AOCS	TPA	AOCS	TPA	AOCS	TPA	AOCS
40	HK	AOCS	TPA	AOCS	TPA	AOCS	TPA	AOCS
48	HK	AOCS	TPA	AOCS	TPA	AOCS	TPA	AOCS
56	HK	AOCS	TPA	AOCS	TPA	AOCS	TPA	AOCS

(FORMAT-07 :Program Dump)

PS No	0	1	2	3	4	5	6	7
0	HK	RAMDMP	RAMDMP	RAMDMP	RAMDMP	RAMDMP	RAMDMP	RAMDMP
8	HK	RAMDMP	RAMDMP	RAMDMP	RAMDMP	RAMDMP	RAMDMP	RAMDMP
16	HK	RAMDMP	RAMDMP	RAMDMP	RAMDMP	RAMDMP	RAMDMP	RAMDMP
24	HK	RAMDMP	RAMDMP	RAMDMP	RAMDMP	RAMDMP	RAMDMP	RAMDMP
32	HK	RAMDMP	RAMDMP	RAMDMP	RAMDMP	RAMDMP	RAMDMP	RAMDMP
40	HK	RAMDMP	RAMDMP	RAMDMP	RAMDMP	RAMDMP	RAMDMP	RAMDMP
48	HK	RAMDMP	RAMDMP	RAMDMP	RAMDMP	RAMDMP	RAMDMP	RAMDMP
56	HK	RAMDMP	RAMDMP	RAMDMP	RAMDMP	RAMDMP	RAMDMP	RAMDMP

(FORMAT-08 :AOCE Program Dump)

PS No	0	1	2	3	4	5	6	7
0	HK	AOCSDMP	AOCSDMP	AOCSDMP	AOCSDMP	AOCSDMP	AOCSDMP	AOCSDMP
8	HK	AOCSDMP	AOCSDMP	AOCSDMP	AOCSDMP	AOCSDMP	AOCSDMP	AOCSDMP
16	HK	AOCSDMP	AOCSDMP	AOCSDMP	AOCSDMP	AOCSDMP	AOCSDMP	AOCSDMP
24	HK	AOCSDMP	AOCSDMP	AOCSDMP	AOCSDMP	AOCSDMP	AOCSDMP	AOCSDMP
32	HK	AOCSDMP	AOCSDMP	AOCSDMP	AOCSDMP	AOCSDMP	AOCSDMP	AOCSDMP
40	HK	AOCSDMP	AOCSDMP	AOCSDMP	AOCSDMP	AOCSDMP	AOCSDMP	AOCSDMP
48	HK	AOCSDMP	AOCSDMP	AOCSDMP	AOCSDMP	AOCSDMP	AOCSDMP	AOCSDMP
56	HK	AOCSDMP	AOCSDMP	AOCSDMP	AOCSDMP	AOCSDMP	AOCSDMP	AOCSDMP

(FORMAT-09 :HCE Mode)

PS No	0	1	2	3	4	5	6	7
0	HK	HCE	HCE	HCE	HCE	HCE	HCE	HCE
8	HK	HCE	HCE	HCE	HCE	HCE	HCE	HCE
16	HK	HCE	HCE	HCE	HCE	HCE	HCE	HCE
24	HK	HCE	HCE	HCE	HCE	HCE	HCE	HCE
32	HK	HCE	HCE	HCE	HCE	HCE	HCE	HCE
40	HK	HCE	HCE	HCE	HCE	HCE	HCE	HCE
48	HK	HCE	HCE	HCE	HCE	HCE	HCE	HCE
56	HK	HCE	HCE	HCE	HCE	HCE	HCE	HCE

NOTE *1)"PS No" means Packet Sequence Number.

Table A-2 Packet Allocation (3/5)

*1 (FORMAT-0A :Analysis [Common])

PS No	0	1	2	3	4	5	6	7
0	HK	DHU	AOCS	DHU	HK	DHU	AOCS	DHU
8	HK	DHU	AOCS	DHU	HK	DHU	AOCS	DHU
16	HK	DHU	AOCS	DHU	HK	DHU	AOCS	DHU
24	HK	DHU	AOCS	DHU	HK	DHU	AOCS	DHU
32	HK	DHU	AOCS	DHU	HK	DHU	AOCS	DHU
40	HK	DHU	AOCS	DHU	HK	DHU	AOCS	DHU
48	HK	DHU	AOCS	DHU	HK	DHU	AOCS	DHU
56	HK	DHU	AOCS	DHU	HK	DHU	AOCS	DHU

(FORMAT-0B :Emergency_1)

PS No	0	1	2	3	4	5	6	7
0	HK	AOCS	HK	AOCS	HK	AOCS	HK	AOCS
8	HK	AOCS	HK	AOCS	HK	AOCS	HK	AOCS
16	HK	AOCS	HK	AOCS	HK	AOCS	HK	AOCS
24	HK	AOCS	HK	AOCS	HK	AOCS	HK	AOCS
32	HK	AOCS	HK	AOCS	HK	AOCS	HK	AOCS
40	HK	AOCS	HK	AOCS	HK	AOCS	HK	AOCS
48	HK	AOCS	HK	AOCS	HK	AOCS	HK	AOCS
56	HK	AOCS	HK	AOCS	HK	AOCS	HK	AOCS

(FORMAT-0C :Emergency_2)

PS No	0	1	2	3	4	5	6	7
0	HK	HK	HK	HK	HK	HK	HK	HK
8	HK	HK	HK	HK	HK	HK	HK	HK
16	HK	HK	HK	HK	HK	HK	HK	HK
24	HK	HK	HK	HK	HK	HK	HK	HK
32	HK	HK	HK	HK	HK	HK	HK	HK
40	HK	HK	HK	HK	HK	HK	HK	HK
48	HK	HK	HK	HK	HK	HK	HK	HK
56	HK	HK	HK	HK	HK	HK	HK	HK

(FORMAT-10 :Observation_P (64K-16K);Periapsis Mode)

PS No	0	1	2	3	4	5	6	7
0	HK	MPM	PWA	PSA	IMI	TPA	PWA	IMI
8	NMS	MPM	PWA	PSA	IMI	TPA	PWA	PSA
16	HK	MPM	PWA	PSA	IMI	TPA	PWA	IMI
24	NMS	MPM	PWA	PSA	IMI	TPA	PWA	PSA
32	HK	MPM	PWA	PSA	IMI	TPA	PWA	IMI
40	NMS	MPM	PWA	PSA	IMI	TPA	PWA	PSA
48	HK	MPM	PWA	PSA	IMI	TPA	PWA	IMI
56	NMS	MPM	PWA	PSA	IMI	TPA	PWA	PSA

NOTE *1)"PS No" means Packet Sequence Number.

Table A-2 Packet Allocation (4/5)

*1 (FORMAT-11 :Observation_S (64K-2K,[1K],512,[256,64];Standard Mode)

PS No	0	1	2	3	4	5	6	7
0	HK	MPM	PWA	PSA	IMI	TPA	PWA	IMI
8	HK	MPM	PWA	PSA	IMI	TPA	PWA	PSA
16	HK	MPM	PWA	PSA	IMI	TPA	PWA	IMI
24	HK	MPM	PWA	PSA	IMI	TPA	PWA	PSA
32	HK	MPM	PWA	PSA	IMI	TPA	PWA	IMI
40	HK	MPM	PWA	PSA	IMI	TPA	PWA	PSA
48	HK	MPM	PWA	PSA	IMI	TPA	PWA	IMI
56	HK	MPM	PWA	PSA	IMI	TPA	PWA	PSA

(FORMAT-13:UVS/XUV (64K-2K);UVS Mode)

PS No	0	1	2	3	4	5	6	7
0	HK	MPM*	MPM	MPM*	PWA	MPM*	PSA	MPM*
8	HK	IMI	MPM*	TPA	MPM*	PWA	MPM*	IMI
16	HK	MPM*	MPM	MPM*	PWA	MPM*	PSA	MPM*
24	HK	IMI	MPM*	TPA	MPM*	PWA	MPM*	PSA
32	HK	MPM*	MPM	MPM*	PWA	MPM*	PSA	MPM*
40	HK	IMI	MPM*	TPA	MPM*	PWA	MPM*	IMI
48	HK	MPM*	MPM	MPM*	PWA	MPM*	PSA	MPM*
56	HK	IMI	MPM*	TPA	MPM*	PWA	MPM*	PSA

(FORMAT-14 :MIC (64K-2K,[256,64];MIC Mode,MIC Dump)

PS No	0	1	2	3	4	5	6	7
0	HK	MIC*	MPM	MIC*	PWA	MIC*	PSA	MIC*
8	HK	IMI	MIC*	TPA	MIC*	PWA	MIC*	IMI
16	HK	MIC*	MPM	MIC*	PWA	MIC*	PSA	MIC*
24	HK	IMI	MIC*	TPA	MIC*	PWA	MIC*	PSA
32	HK	MIC*	MPM	MIC*	PWA	MIC*	PSA	MIC*
40	HK	IMI	MIC*	TPA	MIC*	PWA	MIC*	IMI
48	HK	MIC*	MPM	MIC*	PWA	MIC*	PSA	MIC*
56	HK	IMI	MIC*	TPA	MIC*	PWA	MIC*	PSA

(FORMAT-15 :WFC-M (64K-2K,[256,64];WFC-M Dump)

PS No	0	1	2	3	4	5	6	7
0	HK	PWA*	MPM	PWA*	PWA	PWA*	PSA	PWA*
8	HK	IMI	PWA*	TPA	PWA*	PWA	PWA*	IMI
16	HK	PWA*	MPM	PWA*	PWA	PWA*	PSA	PWA*
24	HK	IMI	PWA*	TPA	PWA*	PWA	PWA*	PSA
32	HK	PWA*	MPM	PWA*	PWA	PWA*	PSA	PWA*
40	HK	IMI	PWA*	TPA	PWA*	PWA	PWA*	IMI
48	HK	PWA*	MPM	PWA*	PWA	PWA*	PSA	PWA*
56	HK	IMI	PWA*	TPA	PWA*	PWA	PWA*	PSA

NOTE *1)"PS No" means Packet Sequence Number.

Table A-2 Packet Allocation (5/5)

(FORMAT-16 :MDC(64K-2K,[256,64];MDC Dump)

PS No	0	1	2	3	4	5	6	7
0	HK	MDC*	MPM	MDC*	PWA	MDC*	PSA	MDC*
8	HK	IMI	MDC*	TPA	MDC*	PWA	MDC*	IMI
16	HK	MDC*	MPM	MDC*	PWA	MDC*	PSA	MDC*
24	HK	IMI	MDC*	TPA	MDC*	PWA	MDC*	PSA
32	HK	MDC*	MPM	MDC*	PWA	MDC*	PSA	MDC*
40	HK	IMI	MDC*	TPA	MDC*	PWA	MDC*	IMI
48	HK	MDC*	MPM	MDC*	PWA	MDC*	PSA	MDC*
56	HK	IMI	MDC*	TPA	MDC*	PWA	MDC*	PSA

The others ; SPARE

NOTE *1)"PS No" means Packet Sequence Number.

Table A-3 Operation Matrix

FORMAT No (HEX)	OPERATION MODE		BIT RATE RECORD X/S-REAL(bps) 64k	32k	16k	8k	4k	2k	1k	512	256	128	64	REMARKS
00	N/A		-	-	-	-	-	-	-	-	-	-	-	
01	Launch	REC	-	-	N	-	-	-	-	-	-	-	-	
		REAL	-	-	N	-	-	-	-	-	-	-	-	
02	AOCS (Maneuver)	REC	-	-	-	N	-	-	-	-	-	-	-	
		REAL	-	-	-	N	N	N	N	N	N	N	N	
03	Extension [MST]	REC	-	-	-	-	B	-	-	-	-	-	-	
		REAL	-	-	-	-	N	-	-	-	-	B	-	
04	Extension [WANT]	REC	-	-	-	-	B	-	-	-	-	-	-	
		REAL	-	-	-	-	N	-	-	-	-	B	-	
05	Deployment [TPA]	REC	-	-	-	-	B	-	-	-	-	-	-	
		REAL	-	-	-	-	N	-	-	-	-	B	-	
06	SPARE		-	-	-	-	-	-	-	-	-	-	-	
07	Program Dump	REC	-	-	-	-	-	-	-	-	-	-	-	↑
		REAL	-	N	N	N	N	N	N	-	-	-	B	S-REAL 1Kbps will be use
08	AOCE Program Dump	REC	-	-	-	-	-	-	-	-	-	-	-	in Parking and
		REAL	-	N	N	N	N	N	N	-	-	-	B	Trans-MARS orbit
09	HCE	REC	-	-	-	-	-	-	-	-	-	-	-	
		REAL	-	N	N	N	N	N	N	-	-	-	B	
0A	Analysis	REC	-	-	-	-	-	-	-	-	-	-	-	
		REAL	-	N	N	N	N	N	N	-	-	-	B	↓
0B	Emergency 1	REC	-	-	-	-	-	-	-	-	-	-	-	
		REAL	-	-	-	-	-	-	-	-	-	-	N	
0C	Emergency 2	REC	-	-	-	-	-	-	-	-	-	-	-	
		REAL	-	-	-	-	-	-	-	-	-	-	N	
0D	SPARE		-	-	-	-	-	-	-	-	-	-	-	
0E	SPARE		-	-	-	-	-	-	-	-	-	-	-	
0F	SPARE		-	-	-	-	-	-	-	-	-	-	-	
10	Observation P	REC	N	N	N	-	-	-	-	B	B	-	-	↑ Periapsis mode
		REAL	-	N	N	-	-	-	-	-	-	-	-	↓
11	Observation S	REC	N	N	N	-	-	-	-	N	N	-	-	↑ Standard observation
		REAL	-	N	N	N	N	N	B	-	-	-	B	↓ mode
12	SPARE		-	-	-	-	-	-	-	-	-	-	-	
13	UVS/XUV	REC	N	N	N	N	N	N	-	-	-	-	-	↑ UVS mode
		REAL	-	N	N	N	N	N	-	-	-	-	-	↓
14	MIC	REC	N	N	-	-	-	-	-	-	-	-	-	MIC mode
		REAL	-	N	N	N	N	N	-	-	B	-	B	MIC-dump
15	WFC-M	REC	-	-	-	-	-	-	-	-	-	-	-	
		REAL	-	N	N	N	N	N	-	-	B	-	B	WFC-M-dump
16	MDC	REC	-	-	-	-	-	-	-	-	-	-	-	
		REAL	-	N	N	N	N	N	-	-	B	-	B	MDC-dump
17	SPARE		-	-	-	-	-	-	-	-	-	-	-	
18	SPARE		-	-	-	-	-	-	-	-	-	-	-	
19	SPARE		-	-	-	-	-	-	-	-	-	-	-	
1A	SPARE		-	-	-	-	-	-	-	-	-	-	-	
1B	SPARE		-	-	-	-	-	-	-	-	-	-	-	
1C	SPARE		-	-	-	-	-	-	-	-	-	-	-	
1D	SPARE		-	-	-	-	-	-	-	-	-	-	-	
1E	SPARE		-	-	-	-	-	-	-	-	-	-	-	
1F	SPARE		-	-	-	-	-	-	-	-	-	-	-	

NOTE: N: Normal mode
B : Back up for TMX and/or DR failure

Table A-4 Cyclic Period per Bit Rate and Repetiion Packet Size

BIT RATE (BPS)	Cyclic Period (sec or minute)							Rec/Real	
	64 *1 packets	32 packets	16 packets	8 packets	4 packets	2 packets	1 packet	Rec	Real
65536	4 s	2 s	1 s	0.5 s	0.25 s	0.125 s	0.063 s	use	N/A
32768	8 s	4 s	2 s	1 s	0.5 s	0.25 s	0.125 s	use	use
16384	16 s	8 s	4 s	2 s	1 s	0.5 s	0.25 s	use	use
8192	32 s	16 s	8 s	4 s	2 s	1 s	0.5 s	use	use
4096	64 s	32 s	16 s	8 s	4 s	2 s	1 s	use	use
2048	2.1 m	64 s	32 s	16 s	8 s	4 s	2 s	use	use
1024	4.3 m	2.1 m	64 s	32 s	16 s	8 s	4 s	use	use
512	8.5 m	4.3 m	2.1 m	64 s	32 s	16 s	8 s	use	use
256	17.1 m	8.5 m	4.3 m	2.1 m	64 s	32 s	16 s	use	use
128	34.1 m	17.1 m	8.5 m	4.3 m	2.1 m	64 s	32 s	use	use
64	68.3 m	34.1 m	17.1 m	8.5 m	4.3 m	2.1 m	64 s	use	use

NOTE : 1) Repetition packet size for each Format

Table A-5 Types of Packets

Packet ID		Using S/S Name	MAIN DATA	PURPOSE
CODE (HEX)	NAME			
00	N/A			
01	HK	ALL S/S	COMMON Status and Data	Standard Observation
02	DHU	DHU	CPU control status	DHU error check
03	spare			
04	RAMDMP	DHU(Using RAM S/S)	Memory Dump(from BFM or S/S RAM)	Memory Dump to Ground
05	AOCSDMP	AOCE	Memory Dump(from AOCE)	Memory Dump to Ground
06	spare			
07	AOCS	AOCE	AOCS Status and Data	Launch/Maneuver
08	EPT/INS	TCI(EPT-SA/INS-SA)	EPT/INS Data	Launch
09	HCE	HCE	Target temperature data dump	HCE data check
0A	spare			
0B	spare			
0C	spare			
0D	spare			
0E	spare			
0F	spare			
10	MPM	MPM	MGF/UVS/MST	↑
11	PSA	PSA	ESA/ISA/EIS/XUV	
12	PWA	PWA	PWS/LFA	Observation
13	MIC	MIC	MIC	
14	TPA	TPA	TPA	
15	IMI	IMI	IMI	
16	MDC	MDC	MDC	
17	NMS	NMS	NMS	↓
18	spare			
19	spare			
1A	spare			
1B	spare			
1C	spare			
1D	spare			
1E	spare			
1F	spare			

Table A-6a Transfer Frame Structures

	SYNC. MARKER	CHANNEL ACCESS SLOT	SYNC. MARKER	

Sync Marker "1ACFFC1D"h (32)*1	Channel Access Slot (4064)

Transfer Frame Header (48)					Packet Data (3488)		CLCW(16)									Reed Solomon Check Symbol
Ver. No.	VCDU ID (14)		Virtual ch. Unit Count	Signaling Field (8)			Packet Header	User Data Field	CMD Bit Lock	RF Lock		CMD Dec. Lock	CMD Dec. Error	CMD Dec. Bit rate	Receiver Select	CMD Retransmit Request	Frame No.	
	Space -craft ID	Virtual ch. ID		Replay Flag	Spare					*2	*3							
(2)	(8)	(6)	(24)	(1)	(7)		(32)	(3456)	(1)	(1)	(1)	(1)	(1)	(1)	(1)	(1)	(8)	(512)
01	07h	000001:REAL DATA 000010:REP. DATA 111111:FILL DATA	000000h ~ FFFFFFh	00h					1: on 0:off			1: on 0:off	1:err 0:no err	1:Hi 0:Lo	1:B 0:A	1:Request 0:No req.	00h ~ FFh	

NOTE *1 : (X) A number of bit in the section.

*2 : SBR-A SQ 1=ON,0=OFF

*3 : SBR-B SQ 1=ON,0=OFF

Table A-6b Packet Data Structure

Packet Header (32)*1			User Data Field (3456)		
Spare	Packet ID	Time Code*2	Secondary header (24) *3		Application Data
			Data Type ID*4	Packet Sequence Control	
				Sequence Flags / Packet Sequence Control	
(2)	(6)	(24)	(8)	(2) / (14)	

← Generated by User →

User Data Field (432bytes=3456bits)									
Data 1								.....	Data 432
Bit0	Bit1	Bit2	Bit3	Bit4	Bit5	Bit6	Bit7		
MSB							LSB		
RD7	RD6	RD5	RD4	RD3	RD2	RD1	RD0	←PIM Signal ID	

NOTE *1: (X) A number of bit in the section.

*2: MSB=524288sec, LSB=31.25msec

*3: Each User can use the secondary header, if necessary. Use or No use is decided as each packet ID.

Table A-7 Data type ID Structure in Secondary Header

	PACKET ID	B0 MSB	B1	B2	B3	B4	B5	B6	B7 LSB
GENERAL	N/A	1:To need compare with program on the system ground support equipment. 0:Except above data	spare	←					→
					Definition by each		subsytems		

PACKET NAME	PACKET ID	B0 MSB	B1	B2	B3	B4	B5	B6	B7 LSB
RAMDMP	04	1	0	←					→
						PIM ID			
AOCSDMP	05	1	0	←					→
						AOCS ID			

Table A-8 PIM ID Code

PIM ID (IC) Unit;hex	S/S NAME
01	DHU
02	AOCE
03	TCI
04	HCE
05	PCD
06	DR
07	PSA
08	PWA
09	MPM
0A	MIC
0B	IMI
0C	MDC
0D	TPA
0E	NMS

Table B-1a HK Packet Structure (1/2)

Word *1	0	1	2	3	4	5	6	7	8	9	10	11	12	13	14	15
0	Packet ID 01h	Time Code			DHU 1 (01,8009)	DHU 2 (01,8000)	DHU 3 (01,8008)	DHU 4 (01,8010)	DHU 5 (01,8011)	DHU 6 (01,8028)	DHU 7 (01,8029)	DHU 8 (01,802A)	DHU 9 (01,8020)	DHU 10 (01,8021)	DHU 11 (01,8022)	DHU 12 (01,8016)
16	DHU 13 (01,8017)	DHU 14 (01,8024)	DHU 15 (01,8023)	DHU 16 (01,802E)	DHU 17 (01,F800)	DHU 18 (01,F801)	DHU 19 (01,F802)	DHU 20 (01,F803)	DHU 21 (01,F804)	DHU 22 (01,F805)	DHU 23 (01,F806)	DHU 24 (01,F807)	DHU 25 (01,F808)	DHU 26 (01,F809)	DHU 27 (01,F80A)	DHU 28 (01,F80B)
32	DHU 29 (01,F80C)	DHU 30 (01,F80D)	DHU 31 (01,F80E)	DHU 32 (01,F80F)	DHU 33 (01,F810)	DHU 34 (01,F811)	DHU 35 (01,F812)	DHU 36 (01,F813)	DHU 37 (01,F814)	DHU 38 (01,F815)	DHU 39 (01,F816)	DHU40 (01,F817)	DHU41 (01,F818)	DHU42 (01,F819)	DHU43 (01,F81A)	DHU44 (01,F81B)
48	DHU45 (01,F81C)	DHU46 (01,F81D)	DHU47 (01,F81E)	DHU48 (01,F81F)	DHU49 (01,F820)	DHU50 (01,F821)	AOCE1 (02,8000)	AOCE 2 (02,8001)	AOCE 3 (02,8002)	AOCE 4 (02,8003)	AOCE 5 (02,8004)	AOCE 6 (02,8005)	AOCE 7 (02,8006)	AOCE 8 (02,8007)	AOCE 9 (02,8009)	AOCE 10 (02,800A)
64	AOCE 11 (02,800B)	AOCE 12 (02,800C)	AOCE 13 (02,800D)	AOCE 14 (02,800E)	AOCE 15 (02,800F)	AOCE 16 (02,8010)	AOCE 17 (02,8011)	AOCE 18 (02,8012)	AOCE 19 (02,8013)	AOCE 20 (02,8014)	AOCE 21 (02,8015)	AOCE 22 (02,8016)	TCI 1 (03,8000)	TCI 2 (03,8001)	TCI 3 (03,8002)	TCI 4 (03,8003)
80	TCI 5 (03,8004)	TCI SPARE (03,8005)	HCE 1 (04,8000)	HCE 2 (04,8001)	HCE 3 (04,8002)	HCE 4 (04,8003)	HCE 5 (04,8004)	HCE6 (04,8005)	HCE7 (04,8006)	HCE8 (04,8007)	HCE9 (04,8008)	HCE10 (04,8009)	HCE11 (04,800A)	DHU51 (01,802B)	PCD1 (05,800A)	PCD2 (05,800B)
96	PCD3 (05,8006)	PCD4 (05,8009)	PCD5 (05,8008)	PCD6 (05,8007)	DR 1 (06,8000)	DR 2 (06,F800)	DR 3 (06,F801)	DR 4 (06,F802)	DR 5 (06,F803)	DR 6 (06,F804)	DR 7 (06,F805)	DR 8 (06,F810)	PSA1 (07,8000)	PSA2 (07,F800)	PSA3 (07,F801)	PSA4 (07,F802)
112	PSA5 (07,F803)	MIC1 (0A,8000)	MIC2 (0A,F800)	MIC3 (0A,F801)	MIC4 (0A,F802)	MIC5 (0A,F803)	MIC6 (0A,F804)	IMI1 (0B,F800)	IMI2 (0B,F801)	IMI3 (0B,F802)	MPM1 (09,8000)	MPM2 (09,F800)	MPM3 (09,F801)	MPM4 (09,F802)	MPM5 (09,F803)	MDC1 (0C,F800)
128	MDC2 (0C,F801)	NMS1 (0E,F800)	NMS2 (0E,F801)	NMS3 (0E,F802)	PWA 1 (08,8000)	PWA 2 (08,F800)	PWA 3 (08,F801)	PWA 4 (08,F802)	PWA 5 (08,F803)	PWA 6 (08,F804)	PWA 7 (08,F805)	PWA 8 (08,F806)	PWA 9 (08,F807)	PWA 10 (08,F808)	PWA 11 (08,F809)	PWA12 (08,F80A)
144	PWA13 (08,F80B)	PWA14 (08,F80C)	PWA15 (08,F80D)	PWA16 (08,F80E)	TPA1 (0D,F800)	TPA2 (0D,F801)	TPA3 (0D,F802)	TPA4 (0D,F803)	AOCS1 (02,F800)	AOCS2 (02,F801)	AOCS3 (02,F802)	AOCS4 (02,F803)	AOCS5 (02,F804)	AOCS6 (02,F805)	AOCS7 (02,F806)	AOCS8 (02,F807)
160	AOCS9 (02,F808)	AOCS10 (02,F809)	AOCS11 (02,F80A)	AOCS12 (02,F80B)	AOCS13 (02,F80C)	AOCS14 (02,F80D)	AOCS15 (02,F80E)	AOCS16 (02,F80F)	AOCS17 (02,F810)	AOCS18 (02,F811)	AOCS19 (02,F812)	AOCS20 (02,F813)	AOCS21 (02,F814)	AOCS22 (02,F815)	AOCS23 (02,F816)	AOCS24 (02,F817)
176	AOCS25 (02,F818)	AOCS26 (02,F819)	AOCS27 (02,F81A)	AOCS28 (02,F81B)	AOCS29 (02,F81C)	AOCS30 (02,F81D)	AOCS31 (02,F81E)	AOCS32 (02,F81F)	AOCS33 (02,F820)	AOCS34 (02,F821)	AOCS35 (02,F822)	AOCS36 (02,F823)	AOCS37 (02,F824)	AOCS38 (02,F825)	AOCS39 (02,F826)	AOCS40 (02,F827)
192	AOCS41 (02,F828)	AOCS42 (02,F829)	AOCS43 (02,F82A)	AOCS44 (02,F82B)	AOCS45 (02,F82C)	AOCS46 (02,F82D)	AOCS47 (02,F82E)	AOCS48 (02,F82F)	AOCS49 (02,F830)	AOCS50 (02,F831)	AOCS51 (02,F832)	AOCS52 (02,F833)	AOCS53 (02,F834)	AOCS54 (02,F835)	AOCS55 (02,F836)	AOCS56 (02,F837)
208	AOCS57 (02,F838)	AOCS58 (02,F839)	AOCS59 (02,F83A)	AOCS60 (02,F83B)												

PIM ID CODE PIM I/F ADDRESS

NOTE *1 : "W0" is located a head of Packet data.

Table B-1a HK Packet Structure (2/2)

Word *1	0	1	2	3	4	5	6	7	8	9	10	11	12	13	14	15
208					AOCS61 (02,F83C)	AOCS62 (02,F83D)	AOCS63 (02,F83E)	AOCS64 (02,F83F)	BATA K1 (05,8000)	BATA K2 (05,8001)	BATA C/D (05,8002)	BATB C/D (05,8003)	BATA EOD (05,8004)	BATB EOD (05,8005)	SCP-I (05,800C)	LOAD-I (05,800D)
224	BATA-I (05,800E)	BATB-I (05,800F)	HTR-I (05,8010)	RF-I (05,8011)	XPA-I (05,8012)	AOCE-I (05,8013)	DHU-I (05,8014)	TCI-I (05,8015)	PSA-I (05,8016)	PWA-I (05,8017)	MPM-I (05,8018)	MIC-I (05,8019)	TPA-I (05,801A)	IMI-I (05,801B)	NMS-I (05,801C)	MDC-I (05,801D)
240	PCD-I (05,801E)	BUS-V (05,801F)	BATA-V (05,8020)	BATB-V (05,8021)	PCD+5V (05,8022)	PCD+12V (05,8023)	PCD-12V (05,8024)	NTNK1-T (04,F800)	NTNK2-T (04,F801)	HTNK1-T (04,F802)	HTNK2-T (04,F803)	GTNK1-T (04,F804)	GTNK2-T (04,F805)	RCSPIP1-T (04,F806)	RCSPIP2-T (04,F807)	RCSPIP3-T (04,F808)
256	RCSPIP4-T (04,F809)	RCSPIP5-T (04,F80A)	HGA2-T (04,F80B)	VLVMA-T (04,F80C)	VLVMB-T (04,F80D)	VLVMC-T (04,F80E)	OMEVLV1-T (04,F80F)	OMEVLV2-T (04,F810)	EMA1-T (04,F811)	EMA2-T (04,F812)	EMB1-T (04,F813)	EMB2-T (04,F814)	BATA1-T (04,F815)	BATA2-T (04,F816)	BATB1-T (04,F817)	BATB2-T (04,F818)
272	XPA-T (04,F819)	SSCBLK-T (04,F81A)	PANEL1-T (04,F81B)	PANEL2-T (04,F81C)	PANEL3-T (04,F81D)	PANEL4-T (04,F81E)	CAL-1 (04,F81F)	USO-T (04,F820)	CAL-3 (04,F821)	CAL-4 (04,F822)	THRA1-T (04,F823)	THRT1-T (04,F824)	THRR1-T (04,F825)	OMEINJ-T (04,F826)	THRA2-T (04,F827)	THRA3-T (04,F828)
288	THRA4-T (04,F829)	THRT2-T (04,F82A)	THRT3-T (04,F82B)	THRT4-T (04,F82C)	THRR2-T (04,F82D)	PDL1-T (04,F82E)	PDL2-T (04,F82F)	SHNT1-T (04,F830)	SHNT2-T (04,F831)	SSC-T (04,F832)	SASBLK-T (04,F833)	MST-T (04,F834)	TMS-T (04,F835)	TMX-T (04,F836)	PANEL5-T (04,F837)	PANEL6-T (04,F838)
304	PANEL7-T (04,F839)	PANEL8-T (04,F83A)	BPANEL1-T (04,F83B)	BPANEL2-T (04,F83C)	BPANEL3-T (04,F83D)	BPANEL4-T (04,F83E)	HGA1-T (04,F83F)	BATB K1 (05,8026)	SET-T ERR (04,800B)	RF+5V (03,F800)	RF+12V (03,F801)	RF-12V (03,F802)	TCI+5V (03,F803)	TCI+12V (03,F804)	TCI-12V (03,F805)	TCI+29V (03,F806)
320	DHU+5V (03,F807)	SBR-A AGC (03,F808)	SBR-A LPS (03,F809)	SBR-B AGC (03,F80A)	SBR-B LPS (03,F80B)	TANK-G P1 (03,F80C)	G-2ND P2 (03,F80D)	TANK-F P3 (03,F80E)	TANK-O P4 (03,F80F)	HI LV OP/CL (03,F810)	LV1 OP/CL (03,F811)	LV2 OP/CL (03,F812)	AOCE+5V (03,F813)	AOCE+12V (03,F814)	AOCE-12V (03,F815)	AOCE+29V (03,F816)
336	SPM DATA H (03,F817)	SPM DATA L (03,F818)	SPM THR H (03,F819)	SPM THR L (03,F81A)	BATB K2 (05,8027)	PSA-E-T (07,8010)	ESA-S-T (07,8011)	ISA-S-T (07,8012)	XUV-S-T (07,8013)	XUV-MCP-T (07,8014)	SV-INT-MON (07,8015)	ESA-MESH (07,8016)	ESA-HVOUT (07,8017)	ISA-HV (07,8018)	XUV-HV (07,8019)	EIS-S-T (07,801A)
352	EIS+5V (07,801B)	EIS+12V (07,801C)	EIS-12V (07,801D)	EIS-MCP (07,801E)	EIS-SSD (07,801F)	LFA-E-T (08,8010)	PWS-RX-T (08,8011)	PAMP-T (08,8012)	PWS+45V (08,8013)	CBANK-T (08,8014)	LOCAL-T (08,8015)	RX2-T (08,8016)	PAMP2-T (08,8017)	WANT1-T (08,8018)	WANT2-T (08,8019)	WANT3-T (08,801A)
368	WANT4-T (08,801B)	PWA+5V (08,801C)	PWA+12V (08,801D)	PWA-12V (08,801E)	PWA+29V (08,801F)	MGF-E-T (09,8010)	MGF-S-T (09,8011)	PET-VF (09,8012)	MST-T (09,8013)	UV-T (09,8014)	PMH-T (09,8015)	PMD-T (09,8016)	PM-T (09,8017)	MCPHV (09,8018)	PMHV (09,8019)	DHIL (09,801A)
384	HFIL (09,801B)	MPM+5V (09,801C)	MPM+12V (09,801D)	MPM-12V (09,801E)	MPM+29V (09,801F)	DSP+5V (0A,8010)	DSP+12V (0A,8011)	DSP-12V (0A,8012)	ASP+5V (0A,8013)	ASP+12V (0A,8014)	ASP-12V (0A,8015)	LENS-T (0A,8018)	CCD-T (0A,8019)	DRV-T (0A,801A)	BASE-T (0A,801B)	FPGA-T (0A,801C)
400	MIC SPARE (0A,801D)	TPA-PCU-T (0D,F804)	TPA-S-T (0D,F805)	CRADLE-T (0D,F806)	BOOM C RES (0D,F807)	IMI-T (0B,F8F0)	IMI HV1 (0B,F8F1)	IMI HV2 (0B,F8F2)	IMI HV3 (0B,F8F3)	IMI HV4 (0B,F8F4)	IMI-T1 (0B,F8F5)	IMI-T2 (0B,F8F6)	IMI-I (0B,F8F7)	IMI INT (0B,F8F8)	IMI RDCTN (0B,F8F9)	IMI DC CNT (0B,F8FA)
416	IMI L-CMD (0B,F8FB)	MDC+200V (0C,F802)	MDC-200V (0C,F803)	MDC-T (0C,F804)	MDC-TCC (0C,F805)	MDC-IMP (0C,F806)	MDC TRIGM (0C,F807)	MDC-NC1 (0C,F808)	MDC-NC2 (0C,F809)	MDC-EC (0C,F80A)	NMS RF-T (0E,F803)	NMS EM-V (0E,F804)	NMS PS-T (0E,F805)	NMS FB-T (0E,F806)	NMS FE-I (0E,F807)	NMS BA-V (0E,F808)
432	NMS BB-V (0E,F809)	NMS HVR (0E,F80A)	NMS +5V (0E,F80B)	NMS-I (0E,F80C)	EMR											

PIM ID CODE

PIM I/F ADDRESS

EMR TO AOCE & TCI (PIM ID O2,03)

NOTE *1 : "W0" is located a head of Packet data.

Table B-1b DHU Packet Structure (1/2)

Word *1	0	1	2	3	4	5	6	7	8	9	10	11	12	13	14	15
0	Packet ID 02h	Time Code			DHU1 (01,FA00)	DHU2 (01,FA01)	DHU3 (01,FA02)	DHU4 (01,FA03)	DHU5 (01,FA04)	DHU6 (01,FA05)	DHU7 (01,FA06)	DHU8 (01,FA07)	DHU9 (01,FA08)	DHU10 (01,FA09)	DHU11 (01,FA0A)	DHU12 (01,FA0B)
16	DHU13 (01,FA0C)	DHU14 (01,FA0D)	DHU15 (01,FA0E)	DHU16 (01,FA0F)	DHU17 (01,FA10)	DHU18 (01,FA11)	DHU19 (01,FA12)	DHU20 (01,FA13)	DHU21 (01,FA14)	DHU22 (01,FA15)	DHU23 (01,FA16)	DHU24 (01,FA17)	DHU25 (01,FA18)	DHU26 (01,FA19)	DHU27 (01,FA1A)	DHU28 (01,FA1B)
32	DHU29 (01,FA1C)	DHU30 (01,FA1D)	DHU31 (01,FA1E)	DHU32 (01,FA1F)	DHU33 (01,FA20)	DHU34 (01,FA21)	DHU35 (01,FA22)	DHU36 (01,FA23)	DHU37 (01,FA24)	DHU38 (01,FA25)	DHU39 (01,FA26)	DHU40 (01,FA27)	DHU41 (01,FA28)	DHU42 (01,FA29)	DHU43 (01,FA2A)	DHU44 (01,FA2B)
48	DHU45 (01,FA2C)	DHU46 (01,FA2D)	DHU47 (01,FA2E)	DHU48 (01,FA2F)	DHU49 (01,FA30)	DHU50 (01,FA31)	DHU51 (01,FA32)	DHU52 (01,FA33)	DHU53 (01,FA34)	DHU54 (01,FA35)	DHU55 (01,FA36)	DHU56 (01,FA37)	DHU57 (01,FA38)	DHU58 (01,FA39)	DHU59 (01,FA3A)	DHU60 (01,FA3B)
64	DHU61 (01,FA3C)	DHU62 (01,FA3D)	DHU63 (01,FA3E)	DHU64 (01,FA3F)	DHU65 (01,FA40)	DHU66 (01,FA41)	DHU67 (01,FA42)	DHU68 (01,FA43)	DHU69 (01,FA44)	DHU70 (01,FA45)	DHU71 (01,FA46)	DHU72 (01,FA47)	DHU73 (01,FA48)	DHU74 (01,FA49)	DHU75 (01,FA4A)	DHU76 (01,FA4B)
80	DHU77 (01,FA4C)	DHU78 (01,FA4D)	DHU79 (01,FA4E)	DHU80 (01,FA4F)	DHU81 (01,FA50)	DHU82 (01,FA51)	DHU83 (01,FA52)	DHU84 (01,FA53)	DHU85 (01,FA54)	DHU86 (01,FA55)	DHU87 (01,FA56)	DHU88 (01,FA57)	DHU89 (01,FA58)	DHU90 (01,FA59)	DHU91 (01,FA5A)	DHU92 (01,FA5B)
96	DHU93 (01,FA5C)	DHU94 (01,FA5D)	DHU95 (01,FA5E)	DHU96 (01,FA5F)	DHU97 (01,FA60)	DHU98 (01,FA61)	DHU99 (01,FA62)	DHU100 (01,FA63)	DHU101 (01,FA64)	DHU102 (01,FA65)	DHU103 (01,FA66)	DHU104 (01,FA67)	DHU105 (01,FA68)	DHU106 (01,FA69)	DHU107 (01,FA6A)	DHU108 (01,FA6B)
112	DHU109 (01,FA6C)	DHU110 (01,FA6D)	DHU111 (01,FA6E)	DHU112 (01,FA6F)	DHU113 (01,FA70)	DHU114 (01,FA71)	DHU115 (01,FA72)	DHU116 (01,FA73)	DHU117 (01,FA74)	DHU118 (01,FA75)	DHU119 (01,FA76)	DHU120 (01,FA77)	DHU121 (01,FA78)	DHU122 (01,FA79)	DHU123 (01,FA7A)	DHU124 (01,FA7B)
128	DHU125 (01,FA7C)	DHU126 (01,FA7D)	DHU127 (01,FA7E)	DHU128 (01,FA7F)	DHU129 (01,FA80)	DHU130 (01,FA81)	DHU131 (01,FA82)	DHU132 (01,FA83)	DHU133 (01,FA84)	DHU134 (01,FA85)	DHU135 (01,FA86)	DHU136 (01,FA87)	DHU137 (01,FA88)	DHU138 (01,FA89)	DHU139 (01,FA8A)	DHU140 (01,FA8B)
144	DHU141 (01,FA8C)	DHU142 (01,FA8D)	DHU143 (01,FA8E)	DHU144 (01,FA8F)	DHU145 (01,FA90)	DHU146 (01,FA91)	DHU147 (01,FA92)	DHU148 (01,FA93)	DHU149 (01,FA94)	DHU150 (01,FA95)	DHU151 (01,FA96)	DHU152 (01,FA97)	DHU153 (01,FA98)	DHU154 (01,FA99)	DHU155 (01,FA9A)	DHU156 (01,FA9B)
160	DHU157 (01,FA9C)	DHU158 (01,FA9D)	DHU159 (01,FA9E)	DHU160 (01,FA9F)	DHU161 (01,FAA0)	DHU162 (01,FAA1)	DHU163 (01,FAA2)	DHU164 (01,FAA3)	DHU165 (01,FAA4)	DHU166 (01,FAA5)	DHU167 (01,FAA6)	DHU168 (01,FAA7)	DHU169 (01,FAA8)	DHU170 (01,FAA9)	DHU171 (01,FAAA)	DHU172 (01,FAAB)
176	DHU173 (01,FAAC)	DHU174 (01,FAAD)	DHU175 (01,FAAE)	DHU176 (01,FAAF)	DHU177 (01,FAB0)	DHU178 (01,FAB1)	DHU179 (01,FAB2)	DHU180 (01,FAB3)	DHU181 (01,FAB4)	DHU182 (01,FAB5)	DHU183 (01,FAB6)	DHU184 (01,FAB7)	DHU185 (01,FAB8)	DHU186 (01,FAB9)	DHU187 (01,FABA)	DHU188 (01,FABB)
192	DHU189 (01,FABC)	DHU190 (01,FABD)	DHU191 (01,FABE)	DHU192 (01,FABF)	DHU193 (01,FAC0)	DHU194 (01,FAC1)	DHU195 (01,FAC2)	DHU196 (01,FAC3)	DHU197 (01,FAC4)	DHU198 (01,FAC5)	DHU199 (01,FAC6)	DHU200 (01,FAC7)	DHU201 (01,FAC8)	DHU202 (01,FAC9)	DHU203 (01,FACA)	DHU204 (01,FACB)
208	DHU205 (01,FACC)	DHU206 (01,FACD)	DHU207 (01,FACE)	DHU208 (01,FACF)												

PIM ID CODE PIM I/F ADDRESS

NOTE *1 : "W0" is located a head of Packet data.

Table B-1b DHU Packet Structure (2/2)

Word *1	0	1	2	3	4	5	6	7	8	9	10	11	12	13	14	15
208					DHU209 (01,FAD0)	DHU210 (01,FAD1)	DHU211 (01,FAD2)	DHU212 (01,FAD3)	DHU213 (01,FAD4)	DHU214 (01,FAD5)	DHU215 (01,FAD6)	DHU216 (01,FAD7)	DHU217 (01,FAD8)	DHU218 (01,FAD9)	DHU219 (01,FADA)	DHU220 (01,FADB)
224	DHU221 (01,FADC)	DHU222 (01,FADD)	DHU223 (01,FADE)	DHU224 (01,FADF)	DHU225 (01,FAE0)	DHU226 (01,FAE1)	DHU227 (01,FAE2)	DHU228 (01,FAE3)	DHU229 (01,FAE4)	DHU230 (01,FAE5)	DHU231 (01,FAE6)	DHU232 (01,FAE7)	DHU233 (01,FAE8)	DHU234 (01,FAE9)	DHU235 (01,FAEA)	DHU236 (01,FAEB)
240	DHU237 (01,FAEC)	DHU238 (01,FAED)	DHU239 (01,FAEE)	DHU240 (01,FAEF)	DHU241 (01,FAF0)	DHU242 (01,FAF1)	DHU243 (01,FAF2)	DHU244 (01,FAF3)	DHU245 (01,FAF4)	DHU246 (01,FAF5)	DHU247 (01,FAF6)	DHU248 (01,FAF7)	DHU249 (01,FAF8)	DHU250 (01,FAF9)	DHU251 (01,FAFA)	DHU252 (01,FAFB)
256	DHU253 (01,FAFC)	DHU254 (01,FAFD)	DHU255 (01,FAFE)	DHU256 (01,FAFF)	DHU257 (01,FB00)	DHU258 (01,FB01)	BFM ECC (01,802F)	C-MEM ERR1 (01,8012)	C-MEM ERR2 (01,8013)	C-MEM ERR3 (01,8014)	DHU PIM (01,0000)	AOCE PIM (02,0000)	TCI PIM (03,0000)	HCE PIM (04,0000)	PCD PIM (05,0000)	DR PIM (06,0000)
272	PSA PIM (07,0000)	PWA PIM (08,0000)	MPM PIM (09,0000)	MIC PIM (0A,0000)	IMI PIM (0B,0000)	MDC PIM (0C,0000)	TPA PIM (0D,0000)	NMS PIM (0E,0000)	spare (01,FFFF)	spare (01,FFFF)	spare (01,FFFF)	spare (01,FFFF)	spare (01,FFFF)	spare (01,FFFF)	spare (01,FFFF)	spare (01,FFFF)
288	spare (01,FFFF)	spare (01,FFFF)	spare (01,FFFF)	spare (01,FFFF)	spare (01,FFFF)	spare (01,FFFF)	spare (01,FFFF)	spare (01,FFFF)	spare (01,FFFF)	spare (01,FFFF)	spare (01,FFFF)	spare (01,FFFF)	spare (01,FFFF)	spare (01,FFFF)	spare (01,FFFF)	spare (01,FFFF)
304	spare (01,FFFF)	spare (01,FFFF)	spare (01,FFFF)	spare (01,FFFF)	spare (01,FFFF)	spare (01,FFFF)	spare (01,FFFF)	spare (01,FFFF)	spare (01,FFFF)	spare (01,FFFF)	spare (01,FFFF)	spare (01,FFFF)	spare (01,FFFF)	spare (01,FFFF)	spare (01,FFFF)	spare (01,FFFF)
320	spare (01,FFFF)	spare (01,FFFF)	spare (01,FFFF)	spare (01,FFFF)	spare (01,FFFF)	spare (01,FFFF)	spare (01,FFFF)	spare (01,FFFF)	spare (01,FFFF)	spare (01,FFFF)	spare (01,FFFF)	spare (01,FFFF)	spare (01,FFFF)	spare (01,FFFF)	spare (01,FFFF)	spare (01,FFFF)
336	spare (01,FFFF)	spare (01,FFFF)	spare (01,FFFF)	spare (01,FFFF)	spare (01,FFFF)	spare (01,FFFF)	spare (01,FFFF)	spare (01,FFFF)	spare (01,FFFF)	spare (01,FFFF)	spare (01,FFFF)	spare (01,FFFF)	spare (01,FFFF)	spare (01,FFFF)	spare (01,FFFF)	spare (01,FFFF)
352	spare (01,FFFF)	spare (01,FFFF)	spare (01,FFFF)	spare (01,FFFF)	spare (01,FFFF)	spare (01,FFFF)	spare (01,FFFF)	spare (01,FFFF)	spare (01,FFFF)	spare (01,FFFF)	spare (01,FFFF)	spare (01,FFFF)	spare (01,FFFF)	spare (01,FFFF)	spare (01,FFFF)	spare (01,FFFF)
368	spare (01,FFFF)	spare (01,FFFF)	spare (01,FFFF)	spare (01,FFFF)	spare (01,FFFF)	spare (01,FFFF)	spare (01,FFFF)	spare (01,FFFF)	spare (01,FFFF)	spare (01,FFFF)	spare (01,FFFF)	spare (01,FFFF)	spare (01,FFFF)	spare (01,FFFF)	spare (01,FFFF)	spare (01,FFFF)
384	spare (01,FFFF)	spare (01,FFFF)	spare (01,FFFF)	spare (01,FFFF)	spare (01,FFFF)	spare (01,FFFF)	spare (01,FFFF)	spare (01,FFFF)	spare (01,FFFF)	spare (01,FFFF)	spare (01,FFFF)	spare (01,FFFF)	spare (01,FFFF)	spare (01,FFFF)	spare (01,FFFF)	spare (01,FFFF)
400	spare (01,FFFF)	spare (01,FFFF)	spare (01,FFFF)	spare (01,FFFF)	spare (01,FFFF)	spare (01,FFFF)	spare (01,FFFF)	spare (01,FFFF)	spare (01,FFFF)	spare (01,FFFF)	spare (01,FFFF)	spare (01,FFFF)	spare (01,FFFF)	spare (01,FFFF)	spare (01,FFFF)	spare (01,FFFF)
416	spare (01,FFFF)	spare (01,FFFF)	spare (01,FFFF)	spare (01,FFFF)	spare (01,FFFF)	spare (01,FFFF)	spare (01,FFFF)	spare (01,FFFF)	spare (01,FFFF)	spare (01,FFFF)	spare (01,FFFF)	spare (01,FFFF)	spare (01,FFFF)	spare (01,FFFF)	spare (01,FFFF)	spare (01,FFFF)
432	spare (01,FFFF)	spare (01,FFFF)	spare (01,FFFF)	spare (01,FFFF)	PACKET END											

PIM ID CODE

PIM I/F ADDRESS

PACKET END TO DHU (PIM ID 01)

NOTE *1 : "W0" is located a head of Packet data.

Table B-1c RAMDMP Packet Structure (1/2)

Word *1	0	1	2	3	4	5	6	7	8	9	10	11	12	13	14	15
0	Packet ID 04h	Time Code			Second ID (01,8030)	Packet SQ control		Dump Address (01,8028)	(01,8029)	Block No. (01,802A)	INC/ID (01,802B)	Blank Data "all 0"				
16	data 0	data 1	data 2	data 3	data 4	data 5	data 6	data 7	data 8	data 9	data 10	data 11	data 12	data 13	data 14	data 15
32	data 16	data 17	data 18	data 19	data 20	data 21	data 22	data 23	data 24	data 25	data 26	data 27	data 28	data 29	data 30	data 31
48	data 32	data 33	data 34	data 35	data 36	data 37	data 38	data 39	data 40	data 41	data 42	data 43	data 44	data 45	data 46	data 47
64	data 48	data 49	data 50	data 51	data 52	data 53	data 54	data 55	data 56	data 57	data 58	data 59	data 60	data 61	data 62	data 63
80	data 64	data 65	data 66	data 67	data 68	data 69	data 70	data 71	data 72	data 73	data 74	data 75	data 76	data 77	data 78	data 79
96	data 80	data 81	data 82	data 83	data 84	data 85	data 86	data 87	data 88	data 89	data 90	data 91	data 92	data 93	data 94	data 95
112	data 96	data 97	data 98	data 99	data 100	data 101	data 102	data 103	data 104	data 105	data 106	data 107	data 108	data 109	data 110	data 111
128	data 112	data 113	data 114	data 115	data 116	data 117	data 118	data 119	data 120	data 121	data 122	data 123	data 124	data 125	data 126	data 127
144	data 128	data 129	data 130	data 131	data 132	data 133	data 134	data 135	data 136	data 137	data 138	data 139	data 140	data 141	data 142	data 143
160	data 144	data 145	data 146	data 147	data 148	data 149	data 150	data 151	data 152	data 153	data 154	data 155	data 156	data 157	data 158	data 159
176	data 160	data 161	data 162	data 163	data 164	data 165	data 166	data 167	data 168	data 169	data 170	data 171	data 172	data 173	data 174	data 175
192	data 176	data 177	data 178	data 179	data 180	data 181	data 182	data 183	data 184	data 185	data 186	data 187	data 188	data 189	data 190	data 191
208	data 192	data 193	data 194	data 195												

NOTE *1 : "W0" is located a head of Packet data.

Table B-1c RAMDMP Packet Structure (2/2)

Word *1	0	1	2	3	4	5	6	7	8	9	10	11	12	13	14	15
208					data 196	data 197	data 198	data 199	data 200	data 201	data 202	data 203	data 204	data 205	data 206	data 207
224	data 208	data 209	data 210	data 211	data 212	data 213	data 214	data 215	data 216	data 217	data 218	data 219	data 220	data 221	data 222	data 223
240	data 224	data 225	data 226	data 227	data 228	data 229	data 230	data 231	data 232	data 233	data 234	data 235	data 236	data 237	data 238	data 239
256	data 240	data 241	data 242	data 243	data 244	data 245	data 246	data 247	data 248	data 249	data 250	data 251	data 252	data 253	data 254	data 255
272	Blank data	Blank data	Blank data	Blank data	Blank data	Blank data	Blank data	Blank data	Blank data	Blank data	Blank data	Blank data	Blank data	Blank data	Blank data	Blank data
288	Blank data	Blank data	Blank data	Blank data	Blank data	Blank data	Blank data	Blank data	Blank data	Blank data	Blank data	Blank data	Blank data	Blank data	Blank data	Blank data
304	Blank data	Blank data	Blank data	Blank data	Blank data	Blank data	Blank data	Blank data	Blank data	Blank data	Blank data	Blank data	Blank data	Blank data	Blank data	Blank data
320	Blank data	Blank data	Blank data	Blank data	Blank data	Blank data	Blank data	Blank data	Blank data	Blank data	Blank data	Blank data	Blank data	Blank data	Blank data	Blank data
336	Blank data	Blank data	Blank data	Blank data	Blank data	Blank data	Blank data	Blank data	Blank data	Blank data	Blank data	Blank data	Blank data	Blank data	Blank data	Blank data
352	Blank data	Blank data	Blank data	Blank data	Blank data	Blank data	Blank data	Blank data	Blank data	Blank data	Blank data	Blank data	Blank data	Blank data	Blank data	Blank data
368	Blank data	Blank data	Blank data	Blank data	Blank data	Blank data	Blank data	Blank data	Blank data	Blank data	Blank data	Blank data	Blank data	Blank data	Blank data	Blank data
384	Blank data	Blank data	Blank data	Blank data	Blank data	Blank data	Blank data	Blank data	Blank data	Blank data	Blank data	Blank data	Blank data	Blank data	Blank data	Blank data
400	Blank data	Blank data	Blank data	Blank data	Blank data	Blank data	Blank data	Blank data	Blank data	Blank data	Blank data	Blank data	Blank data	Blank data	Blank data	Blank data
416	Blank data	Blank data	Blank data	Blank data	Blank data	Blank data	Blank data	Blank data	Blank data	Blank data	Blank data	Blank data	Blank data	Blank data	Blank data	Blank data
432	Blank data	Blank data	Blank data	Blank data	PACKET END											

PACKET END

NOTE *1 : "W0" is located a head of Packet data.

Table B-1d EPT/INS Packet Structure (1/2)

Word *1	0	1	2	3	4	5	6	7	8	9	10	11	12	13	14	15
0	Packet ID	Time Code			DATA CNT	DATA CNT	TIME DATA	TIME DATA	TIME DATA	XSA-H_1	XSA-L_1	PKM_1	XSA-H_2	XSA-L_2	PKM_2	XSA-H_3
	08h				(03,C000)	(03,C001)	(03,C002)	(03,C003)	(03,C004)	(03,C005)	(03,C006)	(03,C007)	(03,C008)	(03,C009)	(03,C00A)	(03,C00B)
16	XSA-L_3	PKM_3	XSA-H_4	XSA-L_4	PKM_4	XSA-H_5	XSA-L_5	PKM_5	XSA-H_6	XSA-L_6	PKM_6	XSA-H_7	XSA-L_7	PKM_7	XSA-H_8	XSA-L_8
	(03,C00C)	(03,C00D)	(03,C00E)	(03,C00F)	(03,C010)	(03,C011)	(03,C012)	(03,C013)	(03,C014)	(03,C015)	(03,C016)	(03,C017)	(03,C018)	(03,C019)	(03,C01A)	(03,C01B)
32	PKM_8	XSA-H_9	XSA-L_9	PKM_9	XSA-H_10	XSA-L_10	PKM_10	XSA-H_11	XSA-L_11	PKM_11	XSA-H_12	XSA-L_12	PKM_12	XSA-H_13	XSA-L_13	PKM_13
	(03,C01C)	(03,C01D)	(03,C01E)	(03,C01F)	(03,C020)	(03,C021)	(03,C022)	(03,C023)	(03,C024)	(03,C025)	(03,C026)	(03,C027)	(03,C028)	(03,C029)	(03,C02A)	(03,C02B)
48	XSA-H_14	XSA-L_14	PKM_14	XSA-H_15	XSA-L_15	PKM_15	XSA-H_16	XSA-L_16	PKM_16	XSA-H_17	XSA-L_17	PKM_17	XSA-H_18	XSA-L_18	PKM_18	XSA-H_19
	(03,C02C)	(03,C02D)	(03,C02E)	(03,C02F)	(03,C030)	(03,C031)	(03,C032)	(03,C033)	(03,C034)	(03,C035)	(03,C036)	(03,C037)	(03,C038)	(03,C039)	(03,C03A)	(03,C03B)
64	XSA-L_19	PKM_19	XSA-H_20	XSA-L_20	PKM_20	XSA-H_21	XSA-L_21	PKM_21	XSA-H_22	XSA-L_22	PKM_22	XSA-H_23	XSA-L_23	PKM_23	XSA-H_24	XSA-L_24
	(03,C03C)	(03,C03D)	(03,C03E)	(03,C03F)	(03,C040)	(03,C041)	(03,C042)	(03,C043)	(03,C044)	(03,C045)	(03,C046)	(03,C047)	(03,C048)	(03,C049)	(03,C04A)	(03,C04B)
80	PKM_24	XSA-H_25	XSA-L_25	PKM_25	XSA-H_26	XSA-L_26	PKM_26	XSA-H_27	XSA-L_27	PKM_27	XSA-H_28	XSA-L_28	PKM_28	XSA-H_29	XSA-L_29	PKM_29
	(03,C04C)	(03,C04D)	(03,C04E)	(03,C04F)	(03,C050)	(03,C051)	(03,C052)	(03,C053)	(03,C054)	(03,C055)	(03,C056)	(03,C057)	(03,C058)	(03,C059)	(03,C05A)	(03,C05B)
96	XSA-H_30	XSA-L_30	PKM_30	XSA-H_31	XSA-L_31	PKM_31	XSA-H_32	XSA-L_32	PKM_32	XSA-H_33	XSA-L_33	PKM_33	XSA-H_34	XSA-L_34	PKM_34	XSA-H_35
	(03,C05C)	(03,C05D)	(03,C05E)	(03,C05F)	(03,C060)	(03,C061)	(03,C062)	(03,C063)	(03,C064)	(03,C065)	(03,C066)	(03,C067)	(03,C068)	(03,C069)	(03,C06A)	(03,C06B)
112	XSA-L_35	PKM_35	XSA-H_36	XSA-L_36	PKM_36	XSA-H_37	XSA-L_37	PKM_37	XSA-H_38	XSA-L_38	PKM_38	XSA-H_39	XSA-L_39	PKM_39	XSA-H_40	XSA-L_40
	(03,C06C)	(03,C06D)	(03,C06E)	(03,C06F)	(03,C070)	(03,C071)	(03,C072)	(03,C073)	(03,C074)	(03,C075)	(03,C076)	(03,C077)	(03,C078)	(03,C079)	(03,C07A)	(03,C07B)
128	PKM_40	XSA-H_41	XSA-L_41	PKM_41	XSA-H_42	XSA-L_42	PKM_42	XSA-H_43	XSA-L_43	PKM_43	XSA-H_44	XSA-L_44	PKM_44	XSA-H_45	XSA-L_45	PKM_45
	(03,C07C)	(03,C07D)	(03,C07E)	(03,C07F)	(03,C080)	(03,C081)	(03,C082)	(03,C083)	(03,C084)	(03,C085)	(03,C086)	(03,C087)	(03,C088)	(03,C089)	(03,C08A)	(03,C08B)
144	XSA-H_46	XSA-L_46	PKM_46	XSA-H_47	XSA-L_47	PKM_47	XSA-H_48	XSA-L_48	PKM_48	XSA-H_49	XSA-L_49	PKM_49	XSA-H_50	XSA-L_50	PKM_50	XSA-H_51
	(03,C08C)	(03,C08D)	(03,C08E)	(03,C08F)	(03,C090)	(03,C091)	(03,C092)	(03,C093)	(03,C094)	(03,C095)	(03,C096)	(03,C097)	(03,C098)	(03,C099)	(03,C09A)	(03,C09B)
160	XSA-L_51	PKM_51	XSA-H_52	XSA-L_52	PKM_52	XSA-H_53	XSA-L_53	PKM_53	XSA-H_54	XSA-L_54	PKM_54	XSA-H_55	XSA-L_55	PKM_55	XSA-H_56	XSA-L_56
	(03,C09C)	(03,C09D)	(03,C09E)	(03,C09F)	(03,C0A0)	(03,C0A1)	(03,C0A2)	(03,C0A3)	(03,C0A4)	(03,C0A5)	(03,C0A6)	(03,C0A7)	(03,C0A8)	(03,C0A9)	(03,C0AA)	(03,C0AB)
176	PKM_56	XSA-H_57	XSA-L_57	PKM_57	XSA-H_58	XSA-L_58	PKM_58	XSA-H_59	XSA-L_59	PKM_59	XSA-H_60	XSA-L_60	PKM_60	XSA-H_61	XSA-L_61	PKM_61
	(03,C0AC)	(03,C0AD)	(03,C0AE)	(03,C0AF)	(03,C0B0)	(03,C0B1)	(03,C0B2)	(03,C0B3)	(03,C0B4)	(03,C0B5)	(03,C0B6)	(03,C0B7)	(03,C0B8)	(03,C0B9)	(03,C0BA)	(03,C0BB)
192	XSA-H_62	XSA-L_62	PKM_62	XSA-H_63	XSA-L_63	PKM_63	XSA-H_64	XSA-L_64	PKM_64	XSA-H_65	XSA-L_65	PKM_65	XSA-H_66	XSA-L_66	PKM_66	XSA-H_67
	(03,C0BC)	(03,C0BD)	(03,C0BE)	(03,C0BF)	(03,C0C0)	(03,C0C1)	(03,C0C2)	(03,C0C3)	(03,C0C4)	(03,C0C5)	(03,C0C6)	(03,C0C7)	(03,C0C8)	(03,C0C9)	(03,C0CA)	(03,C0CB)
208	XSA-L_67	PKM_67	XSA-H_68	XSA-L_68												
	(03,C0CC)	(03,C0CD)	(03,C0CE)	(03,C0CF)												

PIM ID CODE PIM I/F ADDRESS

NOTE *1 : "W0" is located a head of Packet data.

Table B-1d EPT/INS Packet Structure (2/2)

Word *1	0	1	2	3	4	5	6	7	8	9	10	11	12	13	14	15
208					PKM_68 (03,C0D0)	XSA-H_69 (03,C0D1)	XSA-L_69 (03,C0D2)	PKM_69 (03,C0D3)	XSA-H_70 (03,C0D4)	XSA-L_70 (03,C0D5)	PKM_70 (03,C0D6)	XSA-H_71 (03,C0D7)	XSA-L_71 (03,C0D8)	PKM_71 (03,C0D9)	XSA-H_72 (03,C0DA)	XSA-L_72 (03,C0DB)
224	PKM_72 (03,C0DC)	XSA-H_73 (03,C0DD)	XSA-L_73 (03,C0DE)	PKM_73 (03,C0DF)	XSA-H_74 (03,C0E0)	XSA-L_74 (03,C0E1)	PKM_74 (03,C0E2)	XSA-H_75 (03,C0E3)	XSA-L_75 (03,C0E4)	PKM_75 (03,C0E5)	XSA-H_76 (03,C0E6)	XSA-L_76 (03,C0E7)	PKM_76 (03,C0E8)	XSA-H_77 (03,C0E9)	XSA-L_77 (03,C0EA)	PKM_77 (03,C0EB)
240	XSA-H_78 (03,C0EC)	XSA-L_78 (03,C0ED)	PKM_78 (03,C0EE)	XSA-H_79 (03,C0EF)	XSA-L_79 (03,C0F0)	PKM_79 (03,C0F1)	XSA-H_80 (03,C0F2)	XSA-L_80 (03,C0F3)	PKM_80 (03,C0F4)	XSA-H_81 (03,C0F5)	XSA-L_81 (03,C0F6)	PKM_81 (03,C0F7)	XSA-H_82 (03,C0F8)	XSA-L_82 (03,C0F9)	PKM_82 (03,C0FA)	XSA-H_83 (03,C0FB)
256	XSA-L_83 (03,C0FC)	PKM_83 (03,C0FD)	XSA-H_84 (03,C0FE)	XSA-L_84 (03,C0FF)	PKM_84 (03,C100)	XSA-H_85 (03,C101)	XSA-L_85 (03,C102)	PKM_85 (03,C103)	XSA-H_86 (03,C104)	XSA-L_86 (03,C105)	PKM_86 (03,C106)	XSA-H_87 (03,C107)	XSA-L_87 (03,C108)	PKM_87 (03,C109)	XSA-H_88 (03,C10A)	XSA-L_88 (03,C10B)
272	PKM_88 (03,C10C)	XSA-H_89 (03,C10D)	XSA-L_89 (03,C10E)	PKM_89 (03,C10F)	XSA-H_90 (03,C110)	XSA-L_90 (03,C111)	PKM_90 (03,C112)	XSA-H_91 (03,C113)	XSA-L_91 (03,C114)	PKM_91 (03,C115)	XSA-H_92 (03,C116)	XSA-L_92 (03,C117)	PKM_92 (03,C118)	XSA-H_93 (03,C119)	XSA-L_93 (03,C11A)	PKM_93 (03,C11B)
288	XSA-H_94 (03,C11C)	XSA-L_94 (03,C11D)	PKM_94 (03,C11E)	XSA-H_95 (03,C11F)	XSA-L_95 (03,C120)	PKM_95 (03,C121)	XSA-H_96 (03,C122)	XSA-L_96 (03,C123)	PKM_96 (03,C124)	XSA-H_97 (03,C125)	XSA-L_97 (03,C126)	PKM_97 (03,C127)	XSA-H_98 (03,C128)	XSA-L_98 (03,C129)	PKM_98 (03,C12A)	XSA-H_99 (03,C12B)
304	XSA-L_99 (03,C12C)	PKM_99 (03,C12D)	XSA-H_100 (03,C12E)	XSA-L_100 (03,C12F)	PKM_100 (03,C130)	XSA-H_101 (03,C131)	XSA-L_101 (03,C132)	PKM_101 (03,C133)	XSA-H_102 (03,C134)	XSA-L_102 (03,C135)	PKM_102 (03,C136)	XSA-H_103 (03,C137)	XSA-L_103 (03,C138)	PKM_103 (03,C139)	XSA-H_104 (03,C13A)	XSA-L_104 (03,C13B)
320	PKM_104 (03,C13C)	XSA-H_105 (03,C13D)	XSA-L_105 (03,C13E)	PKM_105 (03,C13F)	XSA-H_106 (03,C140)	XSA-L_106 (03,C141)	PKM_106 (03,C142)	XSA-H_107 (03,C143)	XSA-L_107 (03,C144)	PKM_107 (03,C145)	XSA-H_108 (03,C146)	XSA-L_108 (03,C147)	PKM_108 (03,C148)	XSA-H_109 (03,C149)	XSA-L_109 (03,C14A)	PKM_109 (03,C14B)
336	XSA-H_110 (03,C14C)	XSA-L_110 (03,C14D)	PKM_110 (03,C14E)	XSA-H_111 (03,C14F)	XSA-L_111 (03,C150)	PKM_111 (03,C151)	XSA-H_112 (03,C152)	XSA-L_112 (03,C153)	PKM_112 (03,C154)	XSA-H_113 (03,C155)	XSA-L_113 (03,C156)	PKM_113 (03,C157)	XSA-H_114 (03,C158)	XSA-L_114 (03,C159)	PKM_114 (03,C15A)	XSA-H_115 (03,C15B)
352	XSA-L_115 (03,C15C)	PKM_115 (03,C15D)	XSA-H_116 (03,C15E)	XSA-L_116 (03,C15F)	PKM_116 (03,C160)	XSA-H_117 (03,C161)	XSA-L_117 (03,C162)	PKM_117 (03,C163)	XSA-H_118 (03,C164)	XSA-L_118 (03,C165)	PKM_118 (03,C166)	XSA-H_119 (03,C167)	XSA-L_119 (03,C168)	PKM_119 (03,C169)	XSA-H_120 (03,C16A)	XSA-L_120 (03,C16B)
368	PKM_120 (03,C16C)	XSA-H_121 (03,C16D)	XSA-L_121 (03,C16E)	PKM_121 (03,C16F)	XSA-H_122 (03,C170)	XSA-L_122 (03,C171)	PKM_122 (03,C172)	XSA-H_123 (03,C173)	XSA-L_123 (03,C174)	PKM_123 (03,C175)	XSA-H_124 (03,C176)	XSA-L_124 (03,C177)	PKM_124 (03,C178)	XSA-H_125 (03,C179)	XSA-L_125 (03,C17A)	PKM_125 (03,C17B)
384	XSA-H_126 (03,C17C)	XSA-L_126 (03,C17D)	PKM_126 (03,C17E)	XSA-H_127 (03,C17F)	XSA-L_127 (03,C180)	PKM_127 (03,C181)	XSA-H_128 (03,C182)	XSA-L_128 (03,C183)	PKM_128 (03,C184)	Spare (03,0000)	Spare (03,0000)	Spare (03,0000)	Spare (03,0000)	Spare (03,0000)	Spare (03,0000)	Spare (03,0000)
400	EPT-ST_1 (03,C200)	EPT-ST_2 (03,C201)	EPT-ST_3 (03,C202)	EPT-ST_4 (03,C203)	EPT-ST_5 (03,C204)	EPT-ST_6 (03,C205)	EPT-ST_7 (03,C206)	EPT-ST_8 (03,C207)	EPT-ST_9 (03,C208)	EPT-ST_10 (03,C209)	EPT-ST_11 (03,C20A)	EPT-ST_12 (03,C20B)	EPT-ST_23 (03,C20C)	EPT-ST_14 (03,C20D)	EPT-ST_15 (03,C20E)	EPT-ST_16 (03,C20F)
416	EPT-ST_17 (03,C210)	EPT-ST_18 (03,C211)	EPT-ST_19 (03,C212)	EPT-ST_20 (03,C213)	EPT-ST_21 (03,C214)	EPT-ST_22 (03,C215)	EPT-ST_23 (03,C216)	EPT-ST_24 (03,C217)	EPT-ST_25 (03,C218)	EPT-ST_26 (03,C219)	EPT-ST_27 (03,C21A)	EPT-ST_28 (03,C21B)	EPT-ST_29 (03,C21C)	EPT-ST_30 (03,C21D)	EPT-ST_31 (03,C21E)	EPT-ST_32 (03,C21F)
432	Spare (03,0000)	Spare (03,0000)	Spare (03,0000)	Spare (03,0000)	PACKET END											

PIM ID CODE

PIM I/F ADDRESS

PACKET END TO TCI (PIM ID O3)

NOTE *1 : "W0" is located a head of Packet data.

Table B-1e HCE Packet Structure (1/2)

Word *1	0	1	2	3	4	5	6	7	8	9	10	11	12	13	14	15
0	Packet ID 09h	Time Code			Hi set 1 (04,8010)	Lo set 1 (04,8011)	Hi set 2 (04,8012)	Lo set 2 (04,8013)	Hi set 3 (04,8014)	Lo set 3 (04,8015)	Hi set 4 (04,8016)	Lo set 4 (04,8017)	Hi set 5 (04,8018)	Lo set 5 (04,8019)	Hi set 6 (04,801A)	Lo set 6 (04,801B)
16	Hi set 7 (04,801C)	Lo set 7 (04,801D)	Hi set 8 (04,801E)	Lo set 8 (04,801F)	Hi set 9 (04,8020)	Lo set 9 (04,8021)	Hi set 10 (04,8022)	Lo set 10 (04,8023)	Hi set 11 (04,8024)	Lo set 11 (04,8025)	Hi set 12 (04,8026)	Lo set 12 (04,8027)	Hi set 13 (04,8028)	Lo set 13 (04,8029)	Hi set 14 (04,802A)	Lo set 14 (04,802B)
32	Hi set 15 (04,802C)	Lo set 15 (04,802D)	Hi set 16 (04,802E)	Lo set 16 (04,802F)	Hi set 17 (04,8030)	Lo set 17 (04,8031)	Hi set 18 (04,8032)	Lo set 18 (04,8033)	Hi set 19 (04,8034)	Lo set 19 (04,8035)	Hi set 20 (04,8036)	Lo set 20 (04,8037)	Hi set 21 (04,8038)	Lo set 21 (04,8039)	Hi set 22 (04,803A)	Lo set 22 (04,803B)
48	Hi set 23 (04,803C)	Lo set 23 (04,803D)	Hi set 24 (04,803E)	Lo set 24 (04,803F)	Hi set 25 (04,8040)	Lo set 25 (04,8041)	Hi set 26 (04,8042)	Lo set 26 (04,8043)	Hi set 27 (04,8044)	Lo set 27 (04,8045)	Hi set 28 (04,8046)	Lo set 28 (04,8047)	Hi set 29 (04,8048)	Lo set 29 (04,8049)	Hi set 30 (04,804A)	Lo set 30 (04,804B)
64	Hi set 31 (04,804C)	Lo set 31 (04,804D)	Hi set 32 (04,804E)	Lo set 32 (04,804F)	Hi set 33 (04,8050)	Lo set 33 (04,8051)	Hi set 34 (04,8052)	Lo set 34 (04,8053)	Hi set 35 (04,8054)	Lo set 35 (04,8055)	Hi set 36 (04,8056)	Lo set 36 (04,8057)	Hi set 37 (04,8058)	Lo set 37 (04,8059)	Hi set 38 (04,805A)	Lo set 38 (04,805B)
80	Hi set 39 (04,805C)	Lo set 39 (04,805D)	Hi set 40 (04,805E)	Lo set 40 (04,805F)	spare (04,FFFF)	spare (04,FFFF)	spare (04,FFFF)	spare (04,FFFF)	spare (04,FFFF)	spare (04,FFFF)	spare (04,FFFF)	spare (04,FFFF)	spare (04,FFFF)	spare (04,FFFF)	spare (04,FFFF)	spare (04,FFFF)
96	spare (04,FFFF)	spare (04,FFFF)	spare (04,FFFF)	spare (04,FFFF)	spare (04,FFFF)	spare (04,FFFF)	spare (04,FFFF)	spare (04,FFFF)	spare (04,FFFF)	spare (01,FFFF)	spare (04,FFFF)	spare (04,FFFF)	spare (04,FFFF)	spare (04,FFFF)	spare (04,FFFF)	spare (04,FFFF)
112	spare (04,FFFF)	spare (04,FFFF)	spare (04,FFFF)	spare (04,FFFF)	spare (04,FFFF)	spare (04,FFFF)	spare (04,FFFF)	spare (04,FFFF)	spare (04,FFFF)	spare (04,FFFF)	spare (04,FFFF)	spare (04,FFFF)	spare (04,FFFF)	spare (04,FFFF)	spare (04,FFFF)	spare (04,FFFF)
128	spare (04,FFFF)	spare (04,FFFF)	spare (04,FFFF)	spare (04,FFFF)	spare (04,FFFF)	spare (04,FFFF)	spare (04,FFFF)	spare (04,FFFF)	spare (04,FFFF)	spare (04,FFFF)	spare (04,FFFF)	spare (04,FFFF)	spare (04,FFFF)	spare (04,FFFF)	spare (04,FFFF)	spare (04,FFFF)
144	spare (04,FFFF)	spare (04,FFFF)	spare (04,FFFF)	spare (04,FFFF)	spare (04,FFFF)	spare (04,FFFF)	spare (04,FFFF)	spare (04,FFFF)	spare (04,FFFF)	spare (04,FFFF)	spare (04,FFFF)	spare (04,FFFF)	spare (04,FFFF)	spare (04,FFFF)	spare (04,FFFF)	spare (04,FFFF)
160	spare (04,FFFF)	spare (04,FFFF)	spare (04,FFFF)	spare (04,FFFF)	spare (04,FFFF)	spare (04,FFFF)	spare (04,FFFF)	spare (04,FFFF)	spare (04,FFFF)	spare (04,FFFF)	spare (04,FFFF)	spare (04,FFFF)	spare (04,FFFF)	spare (04,FFFF)	spare (04,FFFF)	spare (04,FFFF)
176	spare (04,FFFF)	spare (04,FFFF)	spare (04,FFFF)	spare (04,FFFF)	spare (04,FFFF)	spare (04,FFFF)	spare (04,FFFF)	spare (04,FFFF)	spare (04,FFFF)	spare (04,FFFF)	spare (04,FFFF)	spare (04,FFFF)	spare (04,FFFF)	spare (04,FFFF)	spare (04,FFFF)	spare (04,FFFF)
192	spare (04,FFFF)	spare (04,FFFF)	spare (04,FFFF)	spare (04,FFFF)	spare (04,FFFF)	spare (04,FFFF)	spare (04,FFFF)	spare (04,FFFF)	spare (04,FFFF)	spare (04,FFFF)	spare (04,FFFF)	spare (04,FFFF)	spare (04,FFFF)	spare (04,FFFF)	spare (04,FFFF)	spare (04,FFFF)
208	spare (04,FFFF)	spare (04,FFFF)	spare (04,FFFF)	spare (04,FFFF)												

PIM ID CODE PIM I/F ADDRESS

NOTE *1 : "W0" is located a head of Packet data.

Table B-1e HCE Packet Structure (2/2)

Word *1	0	1	2	3	4	5	6	7	8	9	10	11	12	13	14	15
208					spare (04,FFFF)	spare (04,FFFF)	spare (04,FFFF)	spare (04,FFFF)	spare (04,FFFF)	spare (04,FFFF)	spare (04,FFFF)	spare (04,FFFF)	spare (04,FFFF)	spare (04,FFFF)	spare (04,FFFF)	spare (04,FFFF)
224	spare (04,FFFF)	spare (04,FFFF)	spare (04,FFFF)	spare (04,FFFF)	spare (04,FFFF)	spare (04,FFFF)	spare (04,FFFF)	spare (04,FFFF)	spare (04,FFFF)	spare (04,FFFF)	spare (04,FFFF)	spare (04,FFFF)	spare (04,FFFF)	spare (04,FFFF)	spare (04,FFFF)	spare (04,FFFF)
240	spare (04,FFFF)	spare (04,FFFF)	spare (04,FFFF)	spare (04,FFFF)	spare (04,FFFF)	spare (04,FFFF)	spare (04,FFFF)	spare (04,FFFF)	spare (04,FFFF)	spare (04,FFFF)	spare (04,FFFF)	spare (04,FFFF)	spare (04,FFFF)	spare (04,FFFF)	spare (04,FFFF)	spare (04,FFFF)
256	spare (04,FFFF)	spare (04,FFFF)	spare (04,FFFF)	spare (04,FFFF)	spare (04,FFFF)	spare (04,FFFF)	spare (04,FFFF)	spare (04,FFFF)	spare (04,FFFF)	spare (04,FFFF)	spare (04,FFFF)	spare (04,FFFF)	spare (04,FFFF)	spare (04,FFFF)	spare (04,FFFF)	spare (04,FFFF)
272	spare (04,FFFF)	spare (04,FFFF)	spare (04,FFFF)	spare (04,FFFF)	spare (04,FFFF)	spare (04,FFFF)	spare (04,FFFF)	spare (04,FFFF)	spare (04,FFFF)	spare (04,FFFF)	spare (04,FFFF)	spare (04,FFFF)	spare (04,FFFF)	spare (04,FFFF)	spare (04,FFFF)	spare (04,FFFF)
288	spare (04,FFFF)	spare (04,FFFF)	spare (04,FFFF)	spare (04,FFFF)	spare (04,FFFF)	spare (04,FFFF)	spare (04,FFFF)	spare (04,FFFF)	spare (04,FFFF)	spare (04,FFFF)	spare (04,FFFF)	spare (04,FFFF)	spare (04,FFFF)	spare (04,FFFF)	spare (04,FFFF)	spare (04,FFFF)
304	spare (04,FFFF)	spare (04,FFFF)	spare (04,FFFF)	spare (04,FFFF)	spare (04,FFFF)	spare (04,FFFF)	spare (04,FFFF)	spare (04,FFFF)	spare (04,FFFF)	spare (04,FFFF)	spare (04,FFFF)	spare (04,FFFF)	spare (04,FFFF)	spare (04,FFFF)	spare (04,FFFF)	spare (04,FFFF)
320	spare (04,FFFF)	spare (04,FFFF)	spare (04,FFFF)	spare (04,FFFF)	spare (04,FFFF)	spare (04,FFFF)	spare (04,FFFF)	spare (04,FFFF)	spare (04,FFFF)	spare (04,FFFF)	spare (04,FFFF)	spare (04,FFFF)	spare (04,FFFF)	spare (04,FFFF)	spare (04,FFFF)	spare (04,FFFF)
336	spare (04,FFFF)	spare (04,FFFF)	spare (04,FFFF)	spare (04,FFFF)	spare (04,FFFF)	spare (04,FFFF)	spare (04,FFFF)	spare (04,FFFF)	spare (04,FFFF)	spare (04,FFFF)	spare (04,FFFF)	spare (04,FFFF)	spare (04,FFFF)	spare (04,FFFF)	spare (04,FFFF)	spare (04,FFFF)
352	spare (04,FFFF)	spare (04,FFFF)	spare (04,FFFF)	spare (04,FFFF)	spare (04,FFFF)	spare (04,FFFF)	spare (04,FFFF)	spare (04,FFFF)	spare (04,FFFF)	spare (04,FFFF)	spare (04,FFFF)	spare (04,FFFF)	spare (04,FFFF)	spare (04,FFFF)	spare (04,FFFF)	spare (04,FFFF)
368	spare (04,FFFF)	spare (04,FFFF)	spare (04,FFFF)	spare (04,FFFF)	spare (04,FFFF)	spare (04,FFFF)	spare (04,FFFF)	spare (04,FFFF)	spare (04,FFFF)	spare (04,FFFF)	spare (04,FFFF)	spare (04,FFFF)	spare (04,FFFF)	spare (04,FFFF)	spare (04,FFFF)	spare (04,FFFF)
384	spare (04,FFFF)	spare (04,FFFF)	spare (04,FFFF)	spare (04,FFFF)	spare (04,FFFF)	spare (04,FFFF)	spare (04,FFFF)	spare (04,FFFF)	spare (04,FFFF)	spare (04,FFFF)	spare (04,FFFF)	spare (04,FFFF)	spare (04,FFFF)	spare (04,FFFF)	spare (04,FFFF)	spare (04,FFFF)
400	spare (04,FFFF)	spare (04,FFFF)	spare (04,FFFF)	spare (04,FFFF)	spare (04,FFFF)	spare (04,FFFF)	spare (04,FFFF)	spare (04,FFFF)	spare (04,FFFF)	spare (04,FFFF)	spare (04,FFFF)	spare (04,FFFF)	spare (04,FFFF)	spare (04,FFFF)	spare (04,FFFF)	spare (04,FFFF)
416	spare (04,FFFF)	spare (04,FFFF)	spare (04,FFFF)	spare (04,FFFF)	spare (04,FFFF)	spare (04,FFFF)	spare (04,FFFF)	spare (04,FFFF)	spare (04,FFFF)	spare (04,FFFF)	spare (04,FFFF)	spare (04,FFFF)	spare (04,FFFF)	spare (04,FFFF)	spare (04,FFFF)	spare (04,FFFF)
432	spare (04,FFFF)	spare (04,FFFF)	spare (04,FFFF)	spare (04,FFFF)	PACKET END											

PIM ID CODE

PIM I/F ADDRESS

PACKET END TO HCE (PIM ID O4)

NOTE *1 : "W0" is located a head of Packet data.

Table B-1f AOCSDMP,MPM,PSA,PWA,MIC,TPA,IMI,MDC,NMS Packet Structure (1/2)

Word *1	0	1	2	3	4	5	6	7	8	9	10	11	12	13	14	15
0	Packet ID *2	Time Code			data 1 (**,FA00)	data 2 (**,FA01)	data 3 (**,FA02)	data 4 (**,FA03)	data 5 (**,FA04)	data 6 (**,FA05)	data 7 (**,FA06)	data 8 (**,FA07)	data 9 (**,FA08)	data 10 (**,FA09)	data 11 (**,FA0A)	data 12 (**,FA0B)
16	data 13 (**,FA0C)	data 14 (**,FA0D)	data 15 (**,FA0E)	data 16 (**,FA0F)	data 17 (**,FA10)	data 18 (**,FA11)	data 19 (**,FA12)	data 20 (**,FA13)	data 21 (**,FA14)	data 22 (**,FA15)	data 23 (**,FA16)	data 24 (**,FA17)	data 25 (**,FA18)	data 26 (**,FA19)	data 27 (**,FA1A)	data 28 (**,FA1B)
32	data 29 (**,FA1C)	data 30 (**,FA1D)	data 31 (**,FA1E)	data 32 (**,FA1F)	data 33 (**,FA20)	data 34 (**,FA21)	data 35 (**,FA22)	data 36 (**,FA23)	data 37 (**,FA24)	data 38 (**,FA25)	data 39 (**,FA26)	data 40 (**,FA27)	data 41 (**,FA28)	data 42 (**,FA29)	data 43 (**,FA2A)	data 44 (**,FA2B)
48	data 45 (**,FA2C)	data 46 (**,FA2D)	data 47 (**,FA2E)	data 48 (**,FA2F)	data 49 (**,FA30)	data 50 (**,FA31)	data 51 (**,FA32)	data 52 (**,FA33)	data 53 (**,FA34)	data 54 (**,FA35)	data 55 (**,FA36)	data 56 (**,FA37)	data 57 (**,FA38)	data 58 (**,FA39)	data 59 (**,FA3A)	data 60 (**,FA3B)
64	data 61 (**,FA3C)	data 62 (**,FA3D)	data 63 (**,FA3E)	data 64 (**,FA3F)	data 65 (**,FA40)	data 66 (**,FA41)	data 67 (**,FA42)	data 68 (**,FA43)	data 69 (**,FA44)	data 70 (**,FA45)	data 71 (**,FA46)	data 72 (**,FA47)	data 73 (**,FA48)	data 74 (**,FA49)	data 75 (**,FA4A)	data 76 (**,FA4B)
80	data 77 (**,FA4C)	data 78 (**,FA4D)	data 79 (**,FA4E)	data 80 (**,FA4F)	data 81 (**,FA50)	data 82 (**,FA51)	data 83 (**,FA52)	data 84 (**,FA53)	data 85 (**,FA54)	data 86 (**,FA55)	data 87 (**,FA56)	data 88 (**,FA57)	data 89 (**,FA58)	data 90 (**,FA59)	data 91 (**,FA5A)	data 92 (**,FA5B)
96	data 93 (**,FA5C)	data 94 (**,FA5D)	data 95 (**,FA5E)	data 96 (**,FA5F)	data 97 (**,FA60)	data 98 (**,FA61)	data 99 (**,FA62)	data 100 (**,FA63)	data 101 (**,FA64)	data 102 (**,FA65)	data 103 (**,FA66)	data 104 (**,FA67)	data 105 (**,FA68)	data 106 (**,FA69)	data 107 (**,FA6A)	data 108 (**,FA6B)
112	data 109 (**,FA6C)	data 110 (**,FA6D)	data 111 (**,FA6E)	data 112 (**,FA6F)	data 113 (**,FA70)	data 114 (**,FA71)	data 115 (**,FA72)	data 116 (**,FA73)	data 117 (**,FA74)	data 118 (**,FA75)	data 119 (**,FA76)	data 120 (**,FA77)	data 121 (**,FA78)	data 122 (**,FA79)	data 123 (**,FA7A)	data 124 (**,FA7B)
128	data 125 (**,FA7C)	data 126 (**,FA7D)	data 127 (**,FA7E)	data 128 (**,FA7F)	data 129 (**,FA80)	data 130 (**,FA81)	data 131 (**,FA82)	data 132 (**,FA83)	data 133 (**,FA84)	data 134 (**,FA85)	data 135 (**,FA86)	data 136 (**,FA87)	data 137 (**,FA88)	data 138 (**,FA89)	data 139 (**,FA8A)	data 140 (**,FA8B)
144	data 141 (**,FA8C)	data 142 (**,FA8D)	data 143 (**,FA8E)	data 144 (**,FA8F)	data 145 (**,FA90)	data 146 (**,FA91)	data 147 (**,FA92)	data 148 (**,FA93)	data 149 (**,FA94)	data 150 (**,FA95)	data 151 (**,FA96)	data 152 (**,FA97)	data 153 (**,FA98)	data 154 (**,FA99)	data 155 (**,FA9A)	data 156 (**,FA9B)
160	data 157 (**,FA9C)	data 158 (**,FA9D)	data 159 (**,FA9E)	data 160 (**,FA9F)	data 161 (**,FAA0)	data 162 (**,FAA1)	data 163 (**,FAA2)	data 164 (**,FAA3)	data 165 (**,FAA4)	data 166 (**,FAA5)	data 167 (**,FAA6)	data 168 (**,FAA7)	data 169 (**,FAA8)	data 170 (**,FAA9)	data 171 (**,FAAA)	data 172 (**,FAAB)
176	data 173 (**,FAAC)	data 174 (**,FAAD)	data 175 (**,FAAE)	data 176 (**,FAAF)	data 177 (**,FAB0)	data 178 (**,FAB1)	data 179 (**,FAB2)	data 180 (**,FAB3)	data 181 (**,FAB4)	data 182 (**,FAB5)	data 183 (**,FAB6)	data 184 (**,FAB7)	data 185 (**,FAB8)	data 186 (**,FAB9)	data 187 (**,FABA)	data 188 (**,FABB)
192	data 189 (**,FABC)	data 190 (**,FABD)	data 191 (**,FABE)	data 192 (**,FABF)	data 193 (**,FAC0)	data 194 (**,FAC1)	data 195 (**,FAC2)	data 196 (**,FAC3)	data 197 (**,FAC4)	data 198 (**,FAC5)	data 199 (**,FAC6)	data 200 (**,FAC7)	data 201 (**,FAC8)	data 202 (**,FAC9)	data 203 (**,FACA)	data 204 (**,FACB)
208	data 205 (**,FACC)	data 206 (**,FACD)	data 207 (**,FACE)	data 208 (**,FACF)												

PIM ID CODE　　PIM I/F ADDRESS

NOTE *1 : "W0" is located a head of Packet data.
*2 : Packet ID AOCSDMP 04h,MPM 10h,PSA 11h,PWA 12h,MIC 13h,TPA 14h,IMI 15h,MDC 16h,NMS 17h

Table B-1f AOCSDMP,MPM,PSA,PWA,MIC,TPA,IMI,MDC,NMS Packet Structure (2/2)

Word *1	0	1	2	3	4	5	6	7	8	9	10	11	12	13	14	15
208					data 209 (**,FAD0)	data 210 (**,FAD1)	data 211 (**,FAD2)	data 212 (**,FAD3)	data 213 (**,FAD4)	data 214 (**,FAD5)	data 215 (**,FAD6)	data 216 (**,FAD7)	data 217 (**,FAD8)	data 218 (**,FAD9)	data 219 (**,FADA)	data 220 (**,FADB)
224	data 221 (**,FADC)	data 222 (**,FADD)	data 223 (**,FADE)	data 224 (**,FADF)	data 225 (**,FAE0)	data 226 (**,FAE1)	data 227 (**,FAE2)	data 228 (**,FAE3)	data 229 (**,FAE4)	data 230 (**,FAE5)	data 231 (**,FAE6)	data 232 (**,FAE7)	data 233 (**,FAE8)	data 234 (**,FAE9)	data 235 (**,FAEA)	data 236 (**,FAEB)
240	data 237 (**,FAEC)	data 238 (**,FAED)	data 239 (**,FAEE)	data 240 (**,FAEF)	data 241 (**,FAF0)	data 242 (**,FAF1)	data 243 (**,FAF2)	data 244 (**,FAF3)	data 245 (**,FAF4)	data 246 (**,FAF5)	data 247 (**,FAF6)	data 248 (**,FAF7)	data 249 (**,FAF8)	data 250 (**,FAF9)	data 251 (**,FAFA)	data 252 (**,FAFB)
256	data 253 (**,FAFC)	data 254 (**,FAFD)	data 255 (**,FAFE)	data 256 (**,FAFF)	data 257 (**,FB00)	data 258 (**,FB01)	data 259 (**,FB02)	data 260 (**,FB03)	data 261 (**,FB04)	data 262 (**,FB05)	data 263 (**,FB06)	data 264 (**,FB07)	data 265 (**,FB08)	data 266 (**,FB09)	data 267 (**,FB0A)	data 268 (**,FB0B)
272	data 269 (**,FB0C)	data 270 (**,FB0D)	data 271 (**,FB0E)	data 272 (**,FB0F)	data 273 (**,FB10)	data 274 (**,FB11)	data 275 (**,FB12)	data 276 (**,FB13)	data 277 (**,FB14)	data 278 (**,FB15)	data 279 (**,FB16)	data 280 (**,FB17)	data 281 (**,FB18)	data 282 (**,FB19)	data 283 (**,FB1A)	data 284 (**,FB1B)
288	data 285 (**,FB1C)	data 286 (**,FB1D)	data 287 (**,FB1E)	data 288 (**,FB1F)	data 289 (**,FB20)	data 290 (**,FB21)	data 291 (**,FB22)	data 292 (**,FB23)	data 293 (**,FB24)	data 294 (**,FB25)	data 295 (**,FB26)	data 296 (**,FB27)	data 297 (**,FB28)	data 298 (**,FB29)	data 299 (**,FB2A)	data 300 (**,FB2B)
304	data 301 (**,FB2C)	data 302 (**,FB2D)	data 303 (**,FB2E)	data 304 (**,FB2F)	data 305 (**,FB30)	data 306 (**,FB31)	data 307 (**,FB32)	data 308 (**,FB33)	data 309 (**,FB34)	data 310 (**,FB35)	data 311 (**,FB36)	data 312 (**,FB37)	data 313 (**,FB38)	data 314 (**,FB39)	data 315 (**,FB3A)	data 316 (**,FB3B)
320	data 317 (**,FB3C)	data 318 (**,FB3D)	data 319 (**,FB3E)	data 320 (**,FB3F)	data 321 (**,FB40)	data 322 (**,FB41)	data 323 (**,FB42)	data 324 (**,FB43)	data 325 (**,FB44)	data 326 (**,FB45)	data 327 (**,FB46)	data 328 (**,FB47)	data 329 (**,FB48)	data 330 (**,FB49)	data 331 (**,FB4A)	data 332 (**,FB4B)
336	data 333 (**,FB4C)	data 334 (**,FB4D)	data 335 (**,FB4E)	data 336 (**,FB4F)	data 337 (**,FB50)	data 338 (**,FB51)	data 339 (**,FB52)	data 340 (**,FB53)	data 341 (**,FB54)	data 342 (**,FB55)	data 343 (**,FB56)	data 344 (**,FB57)	data 345 (**,FB58)	data 346 (**,FB59)	data 347 (**,FB5A)	data 348 (**,FB5B)
352	data 349 (**,FB5C)	data 350 (**,FB5D)	data 351 (**,FB5E)	data 352 (**,FB5F)	data 353 (**,FB60)	data 354 (**,FB61)	data 355 (**,FB62)	data 356 (**,FB63)	data 357 (**,FB64)	data 358 (**,FB65)	data 359 (**,FB66)	data 360 (**,FB67)	data 361 (**,FB68)	data 362 (**,FB69)	data 363 (**,FB6A)	data 364 (**,FB6B)
368	data 365 (**,FB6C)	data 366 (**,FB6D)	data 367 (**,FB6E)	data 368 (**,FB6F)	data 369 (**,FB70)	data 370 (**,FB71)	data 371 (**,FB72)	data 372 (**,FB73)	data 373 (**,FB74)	data 374 (**,FB75)	data 375 (**,FB76)	data 376 (**,FB77)	data 377 (**,FB78)	data 378 (**,FB79)	data 379 (**,FB7A)	data 380 (**,FB7B)
384	data 381 (**,FB7C)	data 382 (**,FB7D)	data 383 (**,FB7E)	data 384 (**,FB7F)	data 385 (**,FB80)	data 386 (**,FB81)	data 387 (**,FB82)	data 388 (**,FB83)	data 389 (**,FB84)	data 390 (**,FB85)	data 391 (**,FB86)	data 392 (**,FB87)	data 393 (**,FB88)	data 394 (**,FB89)	data 395 (**,FB8A)	data 396 (**,FB8B)
400	data 397 (**,FB8C)	data 398 (**,FB8D)	data 399 (**,FB8E)	data 400 (**,FB8F)	data 401 (**,FB90)	data 402 (**,FB91)	data 403 (**,FB92)	data 404 (**,FB93)	data 405 (**,FB94)	data 406 (**,FB95)	data 407 (**,FB96)	data 408 (**,FB97)	data 409 (**,FB98)	data 410 (**,FB99)	data 411 (**,FB9A)	data 412 (**,FB9B)
416	data 413 (**,FB9C)	data 414 (**,FB9D)	data 415 (**,FB9E)	data 416 (**,FB9F)	data 417 (**,FBA0)	data 418 (**,FBA1)	data 419 (**,FBA2)	data 420 (**,FBA3)	data 421 (**,FBA4)	data 422 (**,FBA5)	data 423 (**,FBA6)	data 424 (**,FBA7)	data 425 (**,FBA8)	data 426 (**,FBA9)	data 427 (**,FBAA)	data 428 (**,FBAB)
432	data 429 (**,FBAC)	data 430 (**,FBAD)	data 431 (**,FBAE)	data 432 (**,FBAF)	PACKET END											

PIM ID CODE

PIM I/F ADDRESS

PACKET END

NOTE *1 : "W0" is located a head of Packet data.

Table B-2 Bilevel Data List (1/54)

S/S NAME	APID (2nd-H)	ADRS (Hex)	WORD	Bit	SYMBOL	ITEM	STATUS 1	STATUS 0				Inv. Cond	Sub. Cond
DHU	01 (N/A)	8009	4	B0	DHU_CPU-1_ON_EN/DS	CPU-1 ON ENABLE/DISABLE	1:EN	0:DS					
				B1	DHU_CPU-1_OF_EN/DS	CPU-1 OFF ENABLE/DISABLE	1:EN	0:DS					
				B2	DHU_CPU-2_ON_EN/DS	CPU-2 ON ENABLE/DISABLE	1:EN	0:DS					
				B3	DHU_CPU-2_OF_EN/DS	CPU-2 OFF ENABLE/DISABLE	1:EN	0:DS					
				B4	DHU_CPU-1_ON/OF	CPU-1 ON/OFF	1:ON	0:OF					
				B5	DHU_CPU-2_ON/OF	CPU-2 ON/OFF	1:ON	0:OF					
				B6									
				B7	DHU_CPU_RST_EN/DS	CPU RESET ENABLE/DISABLE	1:EN	0:DS					
DHU	01 (N/A)	8000	5	B0									
				B1									
				B2	DHU_CTL_BUS-A_ON/OF	CONTROL BUS-A ON/OFF	1:ON	0:OF					
				B3	DHU_CTL_BUS-B_ON/OF	CONTROL BUS-B ON/OFF	1:ON	0:OF					
				B4	DHU_BUS_CLK-A_ON/OF	BUS CLOCK-A ON/OFF	1:ON	0:OF					
				B5	DHU_BUS_CLK-B_ON/OF	BUS CLOCK-B ON/OFF	1:ON	0:OF					
				B6	DHU_RES_BUS-A_EN/DS	RES BUS-A ENABLE/DISABLE	1:EN	0:DS					
				B7	DHU_RES_BUS-B_EN/DS	RES BUS-B ENABLE/DISABLE	1:EN	0:DS					
DHU	01 (N/A)	8008	6	B0									
				B1									
				B2									
				B3									
				B4	DHU_RD_I/F_ON/OFF	RD INTERFACE ON/OFF	1:ON	0:OF					
				B5	DHU_RD_I/F_ON_ENA	RD INTERFACE ON ENABLE	1:EN	0:DS					
				B6	DHU_RD_I/F_OF_ENA	RD INTERFACE OF ENABLE	1:EN	0:DS					
				B7	DHU_DMA_ACCES_EN/DS	DMA ACCESS ENABLE/DISABLE	1:EN	0:DS					
DHU	01 (N/A)	8010	7	B0	DHU_CPU1_RUN/STP	CPU-1 RUN/STOP	1:RUN	0:STP					
				B1	DHU_CPU2_RUN/STP	CPU-2 RUN/STOP	1:RUN	0:STP					
				B2	DHU_RBT_CNT_EN/DS	REBOOT CONTROL ENABLE/DISABLE	1:EN	0:DS					
				B3									
				B4	DHU_CPU-1_BOT/REBOT	CPU-1 BOOT/REBOOT	1:BOOT	0:REBT					
				B5	DHU_CPU-1_MSR/SLV	CPU-1 MASTER/SLAVE	1:MST	0:SLV					
				B6	DHU_CPU-2_BOT/REBOT	CPU-2 BOOT/REBOOT	1:BOOT	0:REBT					
				B7	DHU_CPU-2_MSR/SLV	CPU-2 MASTER/SLAVE	1:MST	0:SLV					
DHU	01 (N/A)	8011	8	B0	DHU_C-RM_ECC_EN/DS	C-ROM ECC ENABLE/DISABLE	1:EN	0:DS					
				B1	DHU_C-RM_1B-E_EN/DS	C-ROM 1BIT ECC ENABLE/DISABLE	1:EN	0:DS					
				B2	DHU_CP1_L-ECC_EN/DS	CPU-1 LOCAL MEMORY ECC ENABLE/DISABLE	1:EN	0:DS					
				B3	DHU_CP1_L1B-E_EN/DS	CPU-1 LOCAL MEMORY 1BIT ECC ENABLE/DISABL	1:EN	0:DS					
				B4	DHU_CP2_L-ECC_EN/DS	CPU-2 LOCAL MEMORY ECC ENABLE/DISABLE	1:EN	0:DS					
				B5	DHU_CP2_L1B-E_EN/DS	CPU-2 LOCAL MEMORY 1BIT ECC ENABLE/DISABL	1:EN	0:DS					
				B6	DHU_CPU-1_WDT_EN/DS	CPU-1 WDT ENABLE/DISABLE	1:EN	0:DS					
				B7	DHU_CPU-2_WDT_EN/DS	CPU-2 WDT ENABLE/DISABLE	1:EN	0:DS					

Table B-2 Bilevel Data List (2/54)

S/S NAME	APID (2nd-H)	ADRS (Hex)	WORD	Bit	SYMBOL	ITEM	STATUS 1	STATUS 0				Inv. Cond	Sub. Cond
DHU	01 (N/A)	8020	12	B0	DHU_TLM_FMT_ROM_A/B	TELEMETRY FORMAT ROM A/B	1:B	0:A					
				B1	DHU_T-RM_ECC_EN/DS	TELEMETRY FORMAT ROM ECC ENABLE/DISABLE	1:EN	0:DS					
				B2									
				B3	DHU_FORMAT	FORMAT ID	0x04:WNT_EXT	0x02:AOCS	0x0A:0A				
				B4	|							
				B5	|							
				B6	|							
				B7	|							
DHU	01 (N/A)	8021	13	B0									
				B1									
				B2									
				B3									
				B4	DHU_TLM_EDIT_RATE	TELEMETRY EDIT RATE 1	0000:*	0001:*	0010:*	0011:64			
				B5	|	TELEMETRY EDIT RATE 2	0100:128	0101:256	0110:512	0111:1024			
				B6	|	TELEMETRY EDIT RATE 3	1000:2048	1001:4096	1010:8192	1011:16384			
				B7	|	TELEMETRY EDIT RATE 4	1100:32768	1101:65536	1110:*	1111:*			
DHU	01 (N/A)	8022	14	B0	DHU_X_BIT_RATE	X BIT RATE 1	0000:*	0001:*	0010:*	0011:64			
				B1	|	X BIT RATE 2	0100:128	0101:256	0110:512	0111:1024			
				B2	|	X BIT RATE 3	1000:2048	1001:4096	1010:8192	1011:16384			
				B3	|	X BIT RATE 4	1100:32768	1101:65536	1110:*	1111:*			
				B4	DHU_S_BIT_RATE	S BIT RATE 1	0000:*	0001:*	0010:*	0011:64			
				B5	|	S BIT RATE 2	0100:128	0101:256	0110:512	0111:1024			
				B6	|	S BIT RATE 3	1000:2048	1001:4096	1010:8192	1011:16384			
				B7	|	S BIT RATE 4	1100:32768	1101:65536	1110:*	1111:*			
DHU	01 (N/A)	8016	15	B0									
				B1									
				B2	DHU_CP1_SOFT_RST	CPU-1 SOFT RESET 1	1:RST	0:NON					
				B3	DHU_CP1_L2B_E-RST	CPU-1 SOFT RESET 2	1:RST	0:NON					
				B4	DHU_CP1_C2B_E-RST	CPU-1 SOFT RESET 3	1:RST	0:NON					
				B5	DHU_CP1_WDT_OVF_RST	CPU-1 SOFT RESET 4	1:RST	0:NON					
				B6	DHU_CP1_P-ON_RST	CPU-1 POWER-ON RESET	1:RST	0:NON					
				B7	DHU_CP1_REQURD_RST	CPU-1 REQURD RESET	1:RST	0:NON					
DHU	01 (N/A)	8017	16	B0									
				B1									
				B2	DHU_CP2_SOFT_RST	CPU-2 SOFT RESET	1:RST	0:NON					
				B3	DHU_CP2_L2B_E-RST	CPU-2 LOCAL MEMORY 2BIT ERROR RESET	1:RST	0:NON					
				B4	DHU_CP2_C2B_E-RST	CPU-2 COMMON MEMORY 2BIT ERROR RESET	1:RST	0:NON					
				B5	DHU_CP2_WDT_OVF_RST	CPU-2 WDT OVF RESET	1:RST	0:NON					
				B6	DHU_CP2_P-ON_RST	CPU-2 POWER-ON RESET	1:RST	0:NON					
				B7	DHU_CP2_REQURD_RST	CPU-2 REQURD RESET	1:RST	0:NON					

Table B-2 Bilevel Data List (3/54)

S/S NAME	APID (2nd-H)	ADRS (Hex)	WORD	Bit	SYMBOL	ITEM	STATUS 1	STATUS 0				Inv. Cond	Sub. Cond
DHU	01 (N/A)	8023	18	B0									
				B1									
				B2									
				B3	DHU_REC_OUT_ON/OF	REC OUT ON/OFF	1:ON	0:OF					
				B4	DHU_X_TLM_REP/REL	X-TELEMETRY REP/REAL	1:REP	0:REAL					
				B5	DHU_X_TLM_OUT_ON/OF	X-TELEMETRY OUT ON/OFF	1:ON	0:OF					
				B6	DHU_S_TLM_REP/REL	S-TELEMETRY REP/REAL	1:REP	0:REAL					
				B7	DHU_S_TLM_OUT_ON/OF	S-TELEMETRY OUT ON/OFF	1:ON	0:OF					
DHU	01 (N/A)	F800	20	B0	DHU_UVC_MODE_3	UVC MODE 3	1:MODE3	0:NON					
				B1	DHU_UVC_MODE_2	UVC MODE 2	1:MODE2	0:NON					
				B2	DHU_UVC_MODE_1	UVC MODE 1	1:MODE1	0:NON					
				B3	DHU_ATOG_EXE	ATOG EXECUTE	1:EXE	0:NON					
				B4	DHU_REBOOT_INIT_SEQ	REBOOT INIT SEQUENCE	1:ON	0:OF					
				B5	DHU_REBOOT_CONT_SEQ	REBOOT CONT SEQUENCE	1:ON	0:OF					
				B6	DHU_BOOT_SEQ	BOOT SEQUENCE	1:ON	0:OF					
				B7	DHU_CPU_NML/IPL	CPU NOMAL/IPL	1:NML	0:IPL					
DHU	01 (N/A)	F801	21	B0	DHU_OP_EN/DS	OP ENABLE/DISABLE	1:EN	0:DS					
				B1	DHU_ROG_EN/DS	ROG ENABLE/DISABLE	1:EN	0:DS					
				B2	DHU_TI_CMD_EN/DS	TI COMMAND ENABLE/DISABLE	1:EN	0:DS					
				B3	DHU_RQOG_EN/DS	RQOG ENABLE/DISABLE	1:EN	0:DS					
				B4	DHU_ATN_EN/DS	ATN ENABLE/DIABLE	1:EN	0:DS					
				B5	DHU_UVC_EN/DS	UVC ENABLE/DISABLE	1:EN	0:DS					
				B6	DHU_SH_EN/DS	SH ENABLE/DISABLE	1:EN	0:DS					
				B7	DHU_SH_TIMER_IN/OUT	SH TIMER IN/OUT	1:IN	0:OUT					
DHU	01 (N/A)	F802	22	B0	DHU_BUS_CHK_EN/DS	BUS CHECK ENABLE/DISABLE	1:EN	0:DS					
				B1	DHU_TL_ROM_SW_EN/DS	TELEMETRY-ROM SWITCH ENABLE/DISABLE	1:EN	0:DS					
				B2									
				B3	DHU_USR-P_WR_EN/DS	USER-PROGRAM WRITE ENABLE/DISABLE	1:EN	0:DS					
				B4	DHU_BFM_EN/DS	BFM ENABLE/DISABLE	1:EN	0:DS					
				B5	DHU_DMA_ON/OF	DMA ON/OFF	1:ON	0:OF					
				B6									
				B7	DHU_OP_RUN/STP	OP RUN/STOP	1:RUN	0:STOP					
DHU	01 (N/A)	F803	23	B0	DHU_USR-PRG_CMP_ERR	USER-PROGRAM COMP ENABLE/DISABLE	1:ERR	0:NON					
				B1	DHU_DHU-PRG_CMP_ERR	DHU-PROGRAM COMP ENABLE/DISABLE	1:ERR	0:NON					
				B2									
				B3	DHU_TI_CMD_OVF_ERR	TI COMMAND OVF ERROR FLAG	1:ERR	0:NON					
				B4	DHU_CMD_RCV_OVF_ERR	COMMAND RECEIVE OVF ERROR FLAG	1:ERR	0:NON					
				B5	DHU_BC_LENGTH_ERR	BC LENGTH ERROR FLAG	1:ERR	0:NON					
				B6	DHU_ILLGL_DC_ERR	ILLIGAL DC ERROR FLAG	1:ERR	0:NON					
				B7	DHU_CM_SEQ_ERR	COMMAND SEQUENCE ERROR FLAG	1:ERR	0:NON					

Table B-2 Bilevel Data List (4/54)

S/S NAME	APID (2nd-H)	ADRS (Hex)	WORD	Bit	SYMBOL	ITEM	STATUS 1	STATUS 0				Inv. Cond	Sub. Cond
DHU	01 (N/A)	F804	24	B0	DHU_AP-ROM_2BIT_ERR	AP-ROM 2BIT ERROR FLAG	1:ERR	0:NON					
				B1	DHU_TL-ROM_2BIT_ERR	TELEMETRY-ROM 2BIT ERROR FLAG	1:ERR	0:NON					
				B2	DHU_BFM_2BIT_ERR	BFM 2BIT ERROR FLAG	1:ERR	0:NON					
				B3	DHU_ROM_FIX_ERR	ROM FIX ERROR FLAG	1:ERR	0:NON					
				B4	DHU_RAM_FIX_ERR	RAM FIX ERROR FLAG	1:ERR	0:NON					
				B5	DHU_OS_ERR	OS ERROR FLAG	1:ERR	0:NON					
				B6									
				B7									
DHU	01 (N/A)	F805	25	B0	DHU_OP_SYNTAX_ERR	OP SYNTAX ERROR FLAG	1:ERR	0:NON					
				B1	DHU_ATN_TBL_ERR	ATN TBL ERROR FLAG	1:ERR	0:NON					
				B2									
				B3	DHU_REQ_SET_ERR_FLG	REQ COD SET ERROR FLAG	1:ERR	0:NON					
				B4	DHU_UVC_PRM_SET_ERR	UVC PRM SET ERROR FLAG	1:ERR	0:NON					
				B5	DHU_DMP_PRM_SET_ERR	DMP PRM SET ERROR FLAG	1:ERR	0:NON					
				B6	DHU_OG_NUM_SET_ERR	OG NUMBER SET ERROR FLAG	1:ERR	0:NON					
				B7	DHU_ADRS_SET_ERR	ADDRESS SET ERROR FLAG	1:ERR	0:NON					
DHU	02 (N/A)	FA00	4	B0									
				B1	DHU_REBOOT_MAIN_INI	REBOOT MAIN INI	1:ACT	0:NON				○	
				B2									
				B3									
				B4									
				B5									
				B6									
				B7	DHU_BOOT_MAIN	BOOT MAIN	1:ACT	0:NON				○	
DHU	02 (N/A)	FA01	5	B0									
				B1									
				B2									
				B3									
				B4									
				B5	DHU_OTHER_CPU_ON/OF	OTHER CPU ON/OFF	1:ON	0:OF				○	
				B6	DHU_BOOT/RE-BOOT	BOOT/RE-BOOT	1:BOOT	0:REBOOT				○	
				B7	DHU_MAIN/SUB	MAIN/SUB	1:MAIN	0:SUB				○	
DHU	02 (N/A)	FA02	6	B0	DHU_OT_RAM_2BER_RST	OT RAM 2BER RESET	1:ACT	0:NON				○	
				B1	DHU_OT_WDT_OVF_RST	OT WDT OVF RESET	1:ACT	0:NON				○	
				B2	DHU_L-RAM_2BER_RST	L-RAM 2BER RESET	1:ACT	0:NON				○	
				B3	DHU_POWER_ON_RST	POWER ON RESET	1:ACT	0:NON				○	
				B4	DHU_WDT_OVF_RST	WDT OVF RESET	1:ACT	0:NON				○	
				B5	DHU_C-RAM_2BER_RST	C-RAM 2BER RESET	1:ACT	0:NON				○	
				B6									
				B7	DHU_CMD_RST	COMMAND RESET	1:ACT	0:NON				○	

Table B-2 Bilevel Data List (5/54)

S/S NAME	APID (2nd-H)	ADRS (Hex)	WORD	Bit	SYMBOL	ITEM	STATUS 1	STATUS 0				Inv. Cond	Sub. Cond
DHU	02 (N/A)	FA0C	16	B0									
				B1									
				B2									
				B3									
				B4									
				B5									
				B6									
				B7	DHU_IPL_TRNS_SQ_FLG	IPL TRNS SQ FLAG	1:TRANS	0:NON				○	
DHU	02 (N/A)	FA19	29	B0									
				B1									
				B2									
				B3									
				B4									
				B5	DHU_AP_RAM_STORAGE	AP RAM STORAGE	1:DONE	0:NON				○	
				B6	DHU_AP_VERIFY	AP VERIFY 1	NG					○	
				B7	|	AP_VERIFY 2	OK					○	
DHU	02 (N/A)	FA1A	30	B0									
				B1									
				B2									
				B3									
				B4									
				B5	DHU_OS_RAM_STORAGE		1:DONE	0:NON				○	
				B6	DHU_OS_VERIFY	OS VERIFY 1	NG					○	
				B7	|	OS VERIFY 2	OK					○	
DHU	02 (N/A)	FA9C	160	B0	DHU_NOW_BOOST_ENA	NOW BOOST ENABLE 1	EN					○	
				B1	|	NOW BOOST ENABLE 2	DS					○	
				B2	DHU_NOW_BOOST_ON	NOW BOOST ON 1	ON					○	
				B3	|	NOW BOOST ON 2	OF					○	
				B4									
				B5									
				B6									
				B7									
DHU	02 (N/A)	FA9E	162	B0	DHU_LAST_BOOST_ENA	LAST BOOST ENABLE 1	EN					○	
				B1	|	LAST BOOST ENABLE 2	DS					○	
				B2	DHU_LAST_BOOST_ON	LAST BOOST ON 1	ON					○	
				B3	|	LAST BOOST ON 2	OF					○	
				B4									
				B5									
				B6									
				B7									

Table B-2 Bilevel Data List (6/54)

S/S NAME	APID (2nd-H)	ADRS (Hex)	WORD	Bit	SYMBOL	ITEM	STATUS 1	STATUS 0				Inv. Cond	Sub. Cond
DHU	02 (N/A)	FAAC	176	B0									
				B1									
				B2									
				B3	DHU_BFM_OVR_WRT	BFM OVR WRITE	1:ACT	0:NON					
				B4	DHU_USR-P_WRT	USER-PROGRAM WRITE	1:ACT	0:NON				○	
				B5	DHU_USR-P_VRF	USER-PROGRAM VERIFY	1:ACT	0:NON				○	
				B6	DHU_USR-P_TRNS	USER-PROGRAM TRNS	1:ACT	0:NON				○	
				B7	DHU_DUMP	DUMP	1:ACT	0:NON				○	
DHU	02 (N/A)	FABC	192	B0								○	
				B1									
				B2									
				B3									
				B4									
				B5									
				B6									
				B7	DHU_TX_SQ	TX SEQUENCE	1:ACT	0:NON				○	
DHU	02 (N/A)	FAC6	202	B0									
				B1									
				B2									
				B3									
				B4									
				B5									
				B6									
				B7									
DHU	02 (N/A)	FAD8	220	B0									
				B1									
				B2									
				B3									
				B4									
				B5									
				B6									
				B7	DHU_FMT-MEM_STATUS	FORMAT-MEMORY STATUS	1:A	0:B				○	
DHU	02 (N/A)	802F	262	B0									
				B1									
				B2									
				B3									
				B4									
				B5									
				B6									
				B7	DHU_BFM_ECC_EN/DS	BFM ECC ENABLE/DISABLE	1:EN	0:DS				○	

Table B-2 Bilevel Data List (7/54)

S/S NAME	APID (2nd-H)	ADRS (Hex)	WORD	Bit	SYMBOL	ITEM	STATUS 1	STATUS 0				Inv. Cond	Sub. Cond
DHU	02	0000	266	B0									
				B1									
				B2									
				B3									
				B4	DHU_DHU_BUSA_EN/DS	DHU_R-BUS_A_ENBLE/DISABLE	1:EN	0:DS				○	
				B5	DHU_DHU_BUSB_EN/DS	DHU_R-BUS_B_ENBLE/DISABLE	1:EN	0:DS				○	
				B6	DHU_DHU_SBUS_A/B	DHU_S-BUS_A/B	1:A	0:B				○	
				B7	DHU_DHU_ON/OF_HIS	DHU_ON/OFF_CMD_HISTORY	1:ON	0:OF				○	
DHU	02	0000	267	B0									
				B1									
				B2									
				B3									
				B4	DHU_AOCE_BUSA_EN/DS	AOCE_R-BUS_A_ENBLE/DISABLE	1:EN	0:DS				○	
				B5	DHU_AOCE_BUSB_EN/DS	AOCE_R-BUS_B_ENBLE/DISABLE	1:EN	0:DS				○	
				B6	DHU_AOCE_SBUS_A/B	AOCE_S-BUS_A/B	1:A	0:B				○	
				B7	DHU_AOCE_ON/OF_HIS	AOCE_ON/OFF_CMD_HISTORY	1:ON	0:OF				○	
DHU	02	0000	268	B0									
				B1									
				B2									
				B3									
				B4	DHU_TCI_BUSA_EN/DS	TCI_R-BUS_A_ENBLE/DISABLE	1:EN	0:DS				○	
				B5	DHU_TCI_BUSB_EN/DS	TCI_R-BUS_B_ENBLE/DISABLE	1:EN	0:DS				○	
				B6	DHU_TCI_SBUS_A/B	TCI_S-BUS_A/B	1:A	0:B				○	
				B7	DHU_TCI_ON/OF_HIS	TCI_ON/OFF_CMD_HISTORY	1:ON	0:OF				○	
DHU	02	0000	269	B0									
				B1									
				B2									
				B3									
				B4	DHU_HCE_BUSA_EN/DS	HCE_R-BUS_A_ENBLE/DISABLE	1:EN	0:DS				○	
				B5	DHU_HCE_BUSB_EN/DS	HCE_R-BUS_B_ENBLE/DISABLE	1:EN	0:DS				○	
				B6	DHU_HCE_SBUS_A/B	HCE_S-BUS_A/B	1:A	0:B				○	
				B7	DHU_HCE_ON/OF_HIS	HCE_ON/OFF_CMD_HISTORY	1:ON	0:OF				○	
DHU	02	0000	270	B0									
				B1									
				B2									
				B3									
				B4	DHU_PCD_BUSA_EN/DS	PCD_R-BUS_A_ENBLE/DISABLE	1:EN	0:DS				○	
				B5	DHU_PCD_BUSB_EN/DS	PCD_R-BUS_B_ENBLE/DISABLE	1:EN	0:DS				○	
				B6	DHU_PCD_SBUS_A/B	PCD_S-BUS_A/B	1:A	0:B				○	
				B7	DHU_PCD_ON/OF_HIS	PCD_ON/OFF_CMD_HISTORY	1:ON	0:OF				○	

Table B-2 Bilevel Data List (8/54)

S/S NAME	APID (2nd-H)	ADRS (Hex)	WORD	Bit	SYMBOL	ITEM	STATUS 1	STATUS 0				Inv. Cond	Sub. Cond
DHU	02	0000	271	B0									
				B1									
				B2									
				B3									
				B4	DHU_DR_BUSA_EN/DS	DR_R-BUS_A_ENBLE/DISABLE	1:EN	0:DS				○	
				B5	DHU_DR_BUSB_EN/DS	DR_R-BUS_B_ENBLE/DISABLE	1:EN	0:DS				○	
				B6	DHU_DR_SBUS_A/B	DR_S-BUS_A/B	1:A	0:B				○	
				B7	DHU_DR_ON/OF_HIS	DR_ON/OFF_CMD_HISTORY	1:ON	0:OF				○	
DHU	02	0000	272	B0									
				B1									
				B2									
				B3									
				B4	DHU_PSA_BUSA_EN/DS	PSA_R-BUS_A_ENBLE/DISABLE	1:EN	0:DS				○	
				B5	DHU_PSA_BUSB_EN/DS	PSA_R-BUS_B_ENBLE/DISABLE	1:EN	0:DS				○	
				B6	DHU_PSA_SBUS_A/B	PSA_S-BUS_A/B	1:A	0:B				○	
				B7	DHU_PSA_ON/OF_HIS	PSA_ON/OFF_CMD_HISTORY	1:ON	0:OF				○	
DHU	02	0000	273	B0									
				B1									
				B2									
				B3									
				B4	DHU_PWA_BUSA_EN/DS	PWA_R-BUS_A_ENBLE/DISABLE	1:EN	0:DS				○	
				B5	DHU_PWA_BUSB_EN/DS	PWA_R-BUS_B_ENBLE/DISABLE	1:EN	0:DS				○	
				B6	DHU_PWA_SBUS_A/B	PWA_S-BUS_A/B	1:A	0:B				○	
				B7	DHU_PWA_ON/OF_HIS	PWA_ON/OFF_CMD_HISTORY	1:ON	0:OF				○	
DHU	02	0000	274	B0									
				B1									
				B2									
				B3									
				B4	DHU_MPM_BUSA_EN/DS	MPM_R-BUS_A_ENBLE/DISABLE	1:EN	0:DS				○	
				B5	DHU_MPM_BUSB_EN/DS	MPM_R-BUS_B_ENBLE/DISABLE	1:EN	0:DS				○	
				B6	DHU_MPM_SBUS_A/B	MPM_S-BUS_A/B	1:A	0:B				○	
				B7	DHU_MPM_ON/OF_HIS	MPM_ON/OFF_CMD_HISTORY	1:ON	0:OF				○	
DHU	02	0000	275	B0									
				B1									
				B2									
				B3									
				B4	DHU_MIC_BUSA_EN/DS	MIC_R-BUS_A_ENBLE/DISABLE	1:EN	0:DS				○	
				B5	DHU_MIC_BUSB_EN/DS	MIC_R-BUS_B_ENBLE/DISABLE	1:EN	0:DS				○	
				B6	DHU_MIC_SBUS_A/B	MIC_S-BUS_A/B	1:A	0:B				○	
				B7	DHU_MIC_ON/OF_HIS	MIC_ON/OFF_CMD_HISTORY	1:ON	0:OF				○	

Table B-2 Bilevel Data List (9/54)

S/S NAME	APID (2nd-H)	ADRS (Hex)	WORD	Bit	SYMBOL	ITEM	STATUS 1	STATUS 0				Inv. Cond	Sub. Cond
DHU	02	0000	276	B0									
				B1									
				B2									
				B3									
				B4	DHU_IMI_BUSA_EN/DS	IMI_R-BUS_A_ENBLE/DISABLE	1:EN	0:DS				○	
				B5	DHU_IMI_BUSB_EN/DS	IMI_R-BUS_B_ENBLE/DISABLE	1:EN	0:DS				○	
				B6	DHU_IMI_SBUS_A/B	IMI_S-BUS_A/B	1:A	0:B				○	
				B7	DHU_IMI_ON/OF_HIS	IMI_ON/OFF_CMD_HISTORY	1:ON	0:OF				○	
DHU	02	0000	277	B0									
				B1									
				B2									
				B3									
				B4	DHU_MDC_BUSA_EN/DS	MDC_R-BUS_A_ENBLE/DISABLE	1:EN	0:DS				○	
				B5	DHU_MDC_BUSB_EN/DS	MDC_R-BUS_B_ENBLE/DISABLE	1:EN	0:DS				○	
				B6	DHU_MDC_SBUS_A/B	MDC_S-BUS_A/B	1:A	0:B				○	
				B7	DHU_MDC_ON/OF_HIS	MDC_ON/OFF_CMD_HISTORY	1:ON	0:OF				○	
DHU	02	0000	278	B0									
				B1									
				B2									
				B3									
				B4	DHU_TPA_BUSA_EN/DS	TPA_R-BUS_A_ENBLE/DISABLE	1:EN	0:DS				○	
				B5	DHU_TPA_BUSB_EN/DS	TPA_R-BUS_B_ENBLE/DISABLE	1:EN	0:DS				○	
				B6	DHU_TPA_SBUS_A/B	TPA_S-BUS_A/B	1:A	0:B				○	
				B7	DHU_TPA_ON/OF_HIS	TPA_ON/OFF_CMD_HISTORY	1:ON	0:OF				○	
DHU	02	0000	279	B0									
				B1									
				B2									
				B3									
				B4	DHU_NMS_BUSA_EN/DS	NMS_R-BUS_A_ENBLE/DISABLE	1:EN	0:DS				○	
				B5	DHU_NMS_BUSB_EN/DS	NMS_R-BUS_B_ENBLE/DISABLE	1:EN	0:DS				○	
				B6	DHU_NMS_SBUS_A/B	NMS_S-BUS_A/B	1:A	0:B				○	
				B7	DHU_NMS_ON/OF_HIS	NMS_ON/OFF_CMD_HISTORY	1:ON	0:OF				○	
				B0									
				B1									
				B2									
				B3									
				B4									
				B5									
				B6									
				B7									

Table B-2 Bilevel Data List (10/54)

S/S NAME	APID (2nd-H)	ADRS (Hex)	WORD	Bit	SYMBOL	ITEM	STATUS 1	STATUS 0				Inv. Cond	Sub. Cond
TCI	01 (N/A)	8000	76	B0	TCI_SSW-A_LGA-A/SWB	SSW-A LGA-A/SSW-B	1:LGA-A	0:SSW-B					
				B1	TCI_SSW-B_HGA/LGA-B	SSW-B HGA/LGA-B	1:HGA	0:LGA-B					
				B2	TCI_SBR-A_SQ_ON/OF	SBR-A SQ ON/OFF	1:ON	0:OF					
				B3	TCI_SBR-B_SQ_ON/OF	SBR-B SQ ON/OFF	1:ON	0:OF					
				B4	TCI_SPM_GUARD_EN/DS	SPM GUARD ENABLE/DISABLE	1:EN	0:DS					
				B5	TCI_KM_NZL_EXT	KM NOZZLE EXTERNAL	1:EXT	0:NO_EXT					
				B6	TCI_EXT_MEC_SEP	EXT MEC SEP	1:SEP	0:NO_SEP					
				B7	TCI_SA_SEP	SA SEP	1:SEP	0:NO_SEP					
TCI	01 (N/A)	8001	77	B0	TCI_TMS_ON/OF	TMS ON/OFF	1:ON	0:OF					
				B1	TCI_TMS_PWR_HI/LO	TMS POWER HIGH/LOW	1:HI	0:LO					
				B2	TCI_TMS_COH/NCOH	TMS COHERENT/ NON-COHERENT	1:COH	0:NCOH					
				B3	TCI_TMS_COH_EN/DS	TMS COHERENT ENABLE/DISABLE	1:EN	0:DS					
				B4	TCI_LOCAL_USO/TCXO	LOCAL USO/TCXO	1:USO	0:TCXO					
				B5	TCI_TMS_RNG_A/B	TMS RANGING A/B	1:A	0:B					
				B6	TCI_TMS_RNG_ON/OF	TMS RANGING ON/OFF	1:ON	0:OF					
				B7	TCI_TMS_TLM_ON/OF	TMS TELEMETRY ON/OFF	1:ON	0:OF					
TCI	01 (N/A)	8002	78	B0									
				B1	TCI_TMX_ON/OF	TMX ON/OFF	1:ON	0:OF					
				B2	TCI_TMX_COH/NCOH	TMX COHERENT/ NON-COHERENT	1:COH	0:NCOH					
				B3	TCI_TMX_COH_EN/DS	TMX COHERENT ENABLE/DISABLE	1:EN	0:DS					
				B4	TCI_LOCAL_TMS/TCXO	LOCAL TMS/TCXO	1:TMS	0:TCXO					
				B5	TCI_TMX_RNG_A/B	TMX RANGING A/B	1:A	0:B					
				B6	TCI_TMX_TLM/RNG	TMX TELEMETRY/RANGING	1:TLM	0:RNG					
				B7	TCI_TMX_TLM_ON/OF	TMX TELEMETRY ON/OFF	1:ON	0:OF					
TCI	01 (N/A)	8003	79	B0	TCI_PDL-MON-1	PDL MONITOR-1	1:OPEN	0:CLOSE					
				B1	TCI_PDL-MON-2	PDL MONITOR-2	1:OPEN	0:CLOSE					
				B2	TCI_PDL-MON-3	PDL MONITOR-3	1:OPEN	0:CLOSE					
				B3	TCI_PDL-MON-4	PDL MONITOR-4	1:OPEN	0:CLOSE					
				B4	TCI_PDL-MON-5	PDL MONITOR-5	1:OPEN	0:CLOSE					
				B5	TCI_PDL-MON-6	PDL MONITOR-6	1:OPEN	0:CLOSE					
				B6									
				B7									
TCI	01 (N/A)	8004	80	B0	TCI_SPM_ON/OF	SPM ON/OFF	1:ON	0:OF					
				B1	TCI_SPM_LVL_STATUS	SPM LEVEL STATUS 1	00:L0	10:L1					
				B2	|	SPM LEVEL STATUS 2	01:L2	11:L3					
				B3	TCI_USO_ON/OF	USO ON/OFF	1:ON	0:OF					
				B4	TCI_INS1_ON/OF	INS-1 ON/OFF	1:ON	0:OF					
				B5	TCI_INS2_ON/OF	INS-2 ON/OFF	1:ON	0:OF					
				B6	TCI_INS_MODE	INS MODE 1	00:OF	01:SA					
				B7	|	INS MODE 2	10:KM	11:INIT					

Table B-2 Bilevel Data List (11/54)

S/S NAME	APID (2nd-H)	ADRS (Hex)	WORD	Bit	SYMBOL	ITEM	STATUS 1	STATUS 0				Inv. Cond	Sub. Cond
TCI	08 (N/A)	C200	400	B0	TCI_EPT_ARM1	EPT ARM1	1:ON	0:OF					
				B1	TCI_EPT_ARM2	EPT ARM2	1:ON	0:OF					
				B2	TCI_EPT_ARM3	EPT ARM3	1:ON	0:OF					
				B3	TCI_EPT_CLK	EPT ARM3	1:ON	0:OF					
				B4	TCI_EPT_SQ_20	EPT SQ 20	1:ON	0:OF					
				B5	TCI_EPT_SQ_21	EPT SQ 21	1:ON	0:OF					
				B6	TCI_EPT_SQ_22	EPT SQ 22	1:ON	0:OF					
				B7	TCI_EPT_SQ_23	EPT SQ 23	1:ON	0:OF					
TCI	08 (N/A)	C200	400	B0	TCI_EPT-SA_ON/OF	EPT-SA ON/OFF 1	00000000:OFF	OTR:ON					
				B1	|	EPT-SA ON/OFF 2							
				B2	|	EPT-SA ON/OFF 3							
				B3	|	EPT-SA ON/OFF 4							
				B4	|	EPT-SA ON/OFF 5							
				B5	|	EPT-SA ON/OFF 6							
				B6	|	EPT-SA ON/OFF 7							
				B7	|	EPT-SA ON/OFF 8							
				B0									
				B1									
				B2									
				B3									
				B4									
				B5									
				B6									
				B7									
HCE	01 (N/A)	8000	82	B0	HCE_NTNK1_H_ON/OF	NTO TANK1 HEATER ON/OFF	1:ON	0:OF					
				B1	HCE_NTNK2_H_ON/OF	NTO TANK2 HEATER ON/OFF	1:ON	0:OF					
				B2	HCE_HTNK1_H_ON/OF	N2H4 TANK1 HEATER ON/OFF	1:ON	0:OF					
				B3	HCE_HTNK2_H_ON/OF	N2H4 TANK2 HEATER ON/OFF	1:ON	0:OF					
				B4	HCE_GTNK1_H_ON/OF	GHE TANK1 HEATER ON/OFF	1:ON	0:OF					
				B5	HCE_GTNK2_H_ON/OF	GHE TANK2 HEATER ON/OFF	1:ON	0:OF					
				B6	HCE_RCSPIP1_H_ON/OF	RCS PIPE1 HEATER ON/OFF	1:ON	0:OF					
				B7	HCE_RCSPIP2_H_ON/OF	RCS PIPE2 HEATER ON/OFF	1:ON	0:OF					
HCE	01 (N/A)	8001	83	B0	HCE_RCSPIP3_H_ON/OF	RCS PIPE3 HEATER ON/OFF	1:ON	0:OF					
				B1	HCE_RCSPIP4_H_ON/OF	RCS PIPE4 HEATER ON/OFF	1:ON	0:OF					
				B2	HCE_RCSPIP5_H_ON/OF	RCS PIPE5 HEATER ON/OFF	1:ON	0:OF					
				B3									
				B4	HCE_VLVM_A_H_ON/OF	VALVE MODULE A HEATER ON/OFF	1:ON	0:OF					
				B5	HCE_VLVM_B_H_ON/OF	VALVE MODULE B HEATER ON/OFF	1:ON	0:OF					
				B6	HCE_VLVM_C_H_ON/OF	VALVE MODULE C HEATER ON/OFF	1:ON	0:OF					
				B7	HCE_OMEVLV1_H_ON/OF	OME VALVE 1 HEATER ON/OFF	1:ON	0:OF					

Table B-2 Bilevel Data List (12/54)

S/S NAME	APID (2nd-H)	ADRS (Hex)	WORD	Bit	SYMBOL	ITEM	STATUS 1	STATUS 0				Inv. Cond	Sub. Cond
HCE	01 (N/A)	8002	84	B0	HCE_OMEVLV2_H_ON/OF	OME VALVE 2 HEATER ON/OFF	1:ON	0:OF					
				B1	HCE_EMA1_H_ON/OF	ENGINE MODULE A1 HEATER ON/OFF	1:ON	0:OF					
				B2	HCE_EMA2_H_ON/OF	ENGINE MODULE A2 HEATER ON/OFF	1:ON	0:OF					
				B3	HCE_EMB1_H_ON/OF	ENGINE MODULE B1 HEATER ON/OFF	1:ON	0:OF					
				B4	HCE_EMB2_H_ON/OF	ENGINE MODULE B2 HEATER ON/OFF	1:ON	0:OF					
				B5	HCE_BATA1_H_ON/OF	BAT-A 1 HEATER ON/OFF	1:ON	0:OF					
				B6	HCE_BATA2_H_ON/OF	BAT-A 2 HEATER ON/OFF	1:ON	0:OF					
				B7	HCE_BATB1_H_ON/OF	BAT-B 1 HEATER ON/OFF	1:ON	0:OF					
HCE	01 (N/A)	8003	85	B0	HCE_BATB2_H_ON/OF	BAT-B 2 HEATER ON/OFF	1:ON	0:OF					
				B1	HCE_SPARE_02_ON/OF	SPARE 02 ON/OFF	1:ON	0:OF					
				B2	HCE_SSCBLK_H_ON/OF	SSCBLK HEATER ON/OF	1:ON	0:OF					
				B3	HCE_SPARE_03_ON/OF	SPARE 03 ON/OFF	1:ON	0:OF					
				B4	HCE_SPARE_04_ON/OF	SPARE 04 ON/OFF	1:ON	0:OF					
				B5	HCE_SPARE_05_ON/OF	SPARE 05 ON/OFF	1:ON	0:OF					
				B6	HCE_SPARE_06_ON/OF	SPARE 06 ON/OFF	1:ON	0:OF					
				B7									
HCE	01 (N/A)	8004	86	B0									
				B1									
				B2									
				B3	HCE_THRA_H_ON/OF	THRUSTER A HEATER ON/OFF	1:ON	0:OF					
				B4	HCE_THRT_H_ON/OF	THRUSTER T HEATER ON/OFF	1:ON	0:OF					
				B5	HCE_THRR_H_ON/OF	THRUSTER R HEATER ON/OFF	1:ON	0:OF					
				B6	HCE_OMEINJ_H_ON/OF	OME INJECT HEATER ON/OFF	1:ON	0:OF					
				B7									
HCE	01 (N/A)	8005	87	B0	HCE_NTNK1_H_AT/MN	NTO TANK1 HEATER AUTO/MANUAL	1:AT	0:MN					
				B1	HCE_NTNK2_H_AT/MN	NTO TANK2 HEATER AUTO/MANUAL	1:AT	0:MN					
				B2	HCE_HTNK1_H_AT/MN	N2H4 TANK1 HEATER AUTO/MANUAL	1:AT	0:MN					
				B3	HCE_HTNK2_H_AT/MN	N2H4 TANK2 HEATER AUTO/MANUAL	1:AT	0:MN					
				B4	HCE_GTNK1_H_AT/MN	GHE TANK1 HEATER AUTO/MANUAL	1:AT	0:MN					
				B5	HCE_GTNK2_H_AT/MN	GHE TANK2 HEATER AUTO/MANUAL	1:AT	0:MN					
				B6	HCE_RCSPIP1_H_AT/MN	RCS PIPE1 HEATER AUTO/MANUAL	1:AT	0:MN					
				B7	HCE_RCSPIP2_H_AT/MN	RCS PIPE2 HEATER AUTO/MANUAL	1:AT	0:MN					
HCE	01 (N/A)	8006	88	B0	HCE_RCSPIP3_H_AT/MN	RCS PIPE3 HEATER AUTO/MANUAL	1:AT	0:MN					
				B1	HCE_RCSPIP4_H_AT/MN	RCS PIPE4 HEATER AUTO/MANUAL	1:AT	0:MN					
				B2	HCE_RCSPIP5_H_AT/MN	RCS PIPE5 HEATER AUTO/MANUAL	1:AT	0:MN					
				B3									
				B4	HCE_VLVM_A_H_AT/MN	VALVE MODULE A HEATER AUTO/MANUAL	1:AT	0:MN					
				B5	HCE_VLVM_B_H_AT/MN	VALVE MODULE B HEATER AUTO/MANUAL	1:AT	0:MN					
				B6	HCE_VLVM_C_H_AT/MN	VALVE MODULE C HEATER AUTO/MANUAL	1:AT	0:MN					
				B7	HCE_OMEVLV1_H_AT/MN	OME VALVE 1 HEATER AUTO/MANUAL	1:AT	0:MN					

Table B-2 Bilevel Data List (13/54)

S/S NAME	APID (2nd-H)	ADRS (Hex)	WORD	Bit	SYMBOL	ITEM	STATUS 1	STATUS 0				Inv. Cond	Sub. Cond
HCE	01 (N/A)	8007	89	B0	HCE_OMEVLV2_H_AT/MN	OME VALVE 2 HEATER AUTO/MANUAL	1:AT	0:MN					
				B1	HCE_EMA1_H_AT/MN	ENGINE MODULE A1 HEATER AUTO/MANUAL	1:AT	0:MN					
				B2	HCE_EMA2_H_AT/MN	ENGINE MODULE A2 HEATER AUTO/MANUAL	1:AT	0:MN					
				B3	HCE_EMB1_H_AT/MN	ENGINE MODULE B1 HEATER AUTO/MANUAL	1:AT	0:MN					
				B4	HCE_EMB2_H_AT/MN	ENGINE MODULE B2 HEATER AUTO/MANUAL	1:AT	0:MN					
				B5	HCE_BATA1_H_AT/MN	BAT-A 1 HEATER AUTO/MANUAL	1:AT	0:MN					
				B6	HCE_BATA2_H_AT/MN	BAT-A 2 HEATER AUTO/MANUAL	1:AT	0:MN					
				B7	HCE_BATB1_H_AT/MN	BAT-B 1 HEATER AUTO/MANUAL	1:AT	0:MN					
HCE	01 (N/A)	8008	90	B0	HCE_BATB2_H_AT/MN	BAT-B 2 HEATER AUTO/MANUAL	1:AT	0:MN					
				B1	HCE_SPARE_02_AT/MN	SPARE 02 AUTO/MANUAL	1:AT	0:MN					
				B2	HCE_SSCBLK_H_AT/MN	SSCBLK HEATER AUTO/MANUAL	1:AT	0:MN					
				B3	HCE_SPARE_03_AT/MN	SPARE 03 AUTO/MANUAL	1:AT	0:MN					
				B4	HCE_SPARE_04_AT/MN	SPARE 04 AUTO/MANUAL	1:AT	0:MN					
				B5	HCE_SPARE_05_AT/MN	SPARE 05 AUTO/MANUAL	1:AT	0:MN					
				B6	HCE_SPARE_06_AT/MN	SPARE 06 AUTO/MANUAL	1:AT	0:MN					
				B7									
HCE	01 (N/A)	8009	91	B0									
				B1									
				B2									
				B3	HCE_THRA_H_AT/MN	SPARE 03 AUTO/MANUAL	1:AT	0:MN					
				B4	HCE_THRT_H_AT/MN	SPARE 04 AUTO/MANUAL	1:AT	0:MN					
				B5	HCE_THRR_H_AT/MN	SPARE 05 AUTO/MANUAL	1:AT	0:MN					
				B6	HCE_OMEINJ_H_AT/MN	SPARE 06 AUTO/MANUAL	1:AT	0:MN					
				B7									
HCE	01 (N/A)	800A	92	B0	HCE_TEMP_HI/LO_SEL	TEMPERATURE HIGH/LOW SELECT	1:HI	0:LO					
				B1	HCE_GROUP_CTL_ON/OF	GROUP CONTROL ON/OFF	1:ON	0:OF					
				B2	HCE_CURRENT_LIMIT	CURRENT LIMIT	1:ACT	0:NON					
				B3									
				B4									
				B5									
				B6									
				B7									
HCE	01 (N/A)	800B	312	B0	HCE_SET-T_ERR_1	SET-T ERROR1	1:ACT	0:NON					
				B1	HCE_SET-T_ERR_2	SET-T ERROR2	1:ACT	0:NON					
				B2	HCE_SET-T_ERR_3	SET-T ERROR3	1:ACT	0:NON					
				B3	HCE_SET-T_ERR_4	SET-T ERROR4	1:ACT	0:NON					
				B4	HCE_SET-T_ERR_5	SET-T ERROR5	1:ACT	0:NON					
				B5									
				B6									
				B7									

Table B-2 Bilevel Data List (14/54)

S/S NAME	APID (2nd-H)	ADRS (Hex)	WORD	Bit	SYMBOL	ITEM	STATUS 1	STATUS 0				Inv. Cond	Sub. Cond
PCD	01 (N/A)	800A	94	B0	PCD_DIST_HTR_ON/OF	DIST HEATER ON/OFF	1:OF	0:ON					
				B1	PCD_DIST_XPA_ON/OF	DIST XPA ON/OFF	1:OF	0:ON					
				B2	PCD_DIST_AOCE_ON/OF	DIST AOCE ON/OFF	1:OF	0:ON					
				B3	PCD_DIST_DHU_ON/OF	DIST DHU ON/OFF	1:OF	0:ON					
				B4	PCD_DIST_PSU_ON/OF	DIST PSU ON/OFF	1:OF	0:ON					
				B5	PCD_DIST_PSA_ON/OF	DIST PSA ON/OFF	1:OF	0:ON					
				B6	PCD_DIST_PWA_ON/OF	DIST PWA ON/OFF	1:OF	0:ON					
				B7	PCD_DIST_MPM_ON/OF	DIST MPA ON/OFF	1:OF	0:ON					
PCD	01 (N/A)	800B	95	B0	PCD_DIST_MIC_ON/OF	DIST MIC ON/OFF	1:OF	0:ON					
				B1	PCD_DIST_TPA_ON/OF	DIST TPA ON/OFF	1:OF	0:ON					
				B2	PCD_DIST_IMI_ON/OF	DIST IMI ON/OFF	1:OF	0:ON					
				B3	PCD_DIST_NMS_ON/OF	DIST NMS ON/OFF	1:OF	0:ON					
				B4	PCD_DIST_MDC_ON/OF	DIST MDC ON/OFF	1:OF	0:ON					
				B5	PCD_BATA_TRKL_EN/DS	BAT-A TRICKLE ENABLE/DISABLE	1:EN	0:DS					
				B6	PCD_BATB_TRKL_EN/DS	BAT-B TRICKLE ENABLE/DISABLE	1:EN	0:DS					
				B7									
PCD	01 (N/A)	8006	96	B0	PCD_BTBK2_SET_EN/DS	BTBK2 SET ENABLE/DISABLE	1:EN	0:DS					
				B1	PCD_BTBK1_SET_EN/DS	BTBK1 SET ENABLE/DISABLE	1:EN	0:DS					
				B2	PCD_B-C/D_TRK_ON/OF	B-C/D TRK ON/OFF	1:ON	0:OF					
				B3	PCD_A-C/D_TRK_ON/OF	A-C/D TRK ON/OFF	1:ON	0:OF					
				B4	PCD_B-C/D_SET_EN/DS	B-C/D SET ENABLE/DISABLE	1:EN	0:DS					
				B5	PCD_A-C/D_SET_EN/DS	A-C/D SET ENABLE/DISABLE	1:EN	0:DS					
				B6	PCD_BTAK2_SET_EN/DS	BTAK2 SET ENABLE/DISABLE	1:EN	0:DS					
				B7	PCD_BTAK1_SET_EN/DS	BTAK1 SET ENABLE/DISABLE	1:EN	0:DS					
PCD	01 (N/A)	8009	97	B0	PCD_B-TMP-TRK_ON/OF	B-TMP-TRK ON/OFF	1:ON	0:OF					
				B1	PCD_B-CHG_FUL/TRK	BAT-B CHARGE FULL/TRICKLE	1:FULL	0:N-FL					
				B2	PCD_B-TMP-CNT_EN/DS	B-TMP-CNT ENABLE/DISABLE	1:EN	0:DS					
				B3	PCD_BAT-B_INT/EXT	BAT-B INTERNAL/EXTERNAL	1:INT	0:EXT					
				B4	PCD_A-TMP-TRK_ON/OF	A-TMP-TRK ON/OFF	1:ON	0:OF					
				B5	PCD_A-CHG_FUL/TRK	BAT-A CHARGE FULL/TRICKLE	1:FULL	0:N-FL					
				B6	PCD_A-TMP-CNT_EN/DS	A-TMP-CNT ENABLE/DISABLE	1:EN	0:DS					
				B7	PCD_BAT-A_INT/EXT	BAT-A INTERNAL/EXTERNAL	1:INT	0:EXT					
PCD	01 (N/A)	8008	98	B0	PCD_BOOST_EN/DS	BOOST ENABLE/DIABLE	1:EN	0:DS					
				B1	PCD_BOOST_ON/OF	BOOST ON/OFF	1:ON	0:OF					
				B2	PCD_SHNT_SW1_EN/DS	SHNT SWITCH1 ENABLE/DISABLE	1:EN	0:DS					
				B3	PCD_SHNT_SW2_EN/DS	SHNT SW2 ENABLE/DISABLE	1:EN	0:DS					
				B4	PCD_SHNT_SW3_EN/DS	SHNT SW3 ENABLE/DISABLE	1:EN	0:DS					
				B5	PCD_BAT_RCN_ON/OF	BAT RCN ON/OFFF	1:ON	0:OF					
				B6	PCD_BAT_TAPR_LEVEL	BAT TAPR LEVEL	1:L1	0:L2					
				B7	PCD_BAT_UVC_LEVEL	BAT UVC LEVEL	1:L1	0:L2					

Table B-2 Bilevel Data List (15/54)

S/S NAME	APID (2nd-H)	ADRS (Hex)	WORD	Bit	SYMBOL	ITEM	STATUS 1	STATUS 0				Inv. Cond	Sub. Cond
PCD	01 (N/A)	8007	99	B0	PCD_BAT_IN/EX_EN/DS	BAT INTERNAL/EXTERNAL ENABLE/DISABLE	1:EN	0:DS					
				B1	PCD_CI_ON/OF_EN/DS	CI ON/OFFF ENABLE/DISABLE	1:EN	0:DS					
				B2	PCD_SR_REQ_EN/DS	SR REQ ENABLE/DISABLE	1:EN	0:DS					
				B3	PCD_SR_REQ_ON/OF	SR REQ ON/OFF	1:ON	0:OF					
				B4	PCD_UVC_REQ_ON/OF	UVC REQ ON/OFF	1:ON	0:OF					
				B5	PCD_BAT_UVC_HISTORY	BAT UVC HISTORY	1:WAS	0:NOT					
				B6	PCD_BAT-B_UVC_EN/DS	BAT-B UVC ENABLE/DISABLE	1:EN	0:DS					
				B7	PCD_BAT-A_UVC_EN/DS	BAT-A UVC ENABLE/DISABLE	1:EN	0:DS					
PCD	01 (N/A)	800A	94	B0									
				B1	PCD_DIST_XPA_PWR	DIST XPA ON/OFFF	1:OF	0:XPA					
				B2									
				B3									
				B4									
				B5									
				B6									
				B7									
				B0									
				B1									
				B2									
				B3									
				B4									
				B5									
				B6									
				B7									
DR	01 (N/A)	8000	100	B0	DR_ON/OF	DR ON/OFF	1:ON	0:OF					
				B1									
				B2									
				B3									
				B4	DR_MEM_BLK3_ON/OF	MEMORY BLOCK"3" ON/OFF	1:ON	0:OF					
				B5	DR_MEM_BLK2_ON/OF	MEMORY BLOCK"2" ON/OFF	1:ON	0:OF					
				B6	DR_MEM_BLK1_ON/OF	MEMORY BLOCK"1" ON/OFF	1:ON	0:OF					
				B7	DR_MEM_BLK0_ON/OF	MEMORY BLOCK"0" ON/OFF	1:ON	0:OF					
DR	01 (N/A)	F800	101	B0	DR_WDT_RST	WDT RESET	1:RST	0:NON					
				B1	DR_SELF_CHK_EN/DS	DR SELF CHECK ENABLE/DISABLE	1:EN	0:DS					
				B2	DR_SELF_CHK_ON/OF	DR SELF CHECK ON/OFF	1:ON	0:OF					
				B3	DR_MODE	DR STBY MODE	100:STBY	010:REP	001:REC	011:REC/REP			
				B4	|	DR REPRO MODE	000:NON	OTR:ERR					
				B5	|	DR REC MODE							
				B6	DR_BC_CMD_RCV_FLG	BLOCK COMMAND RECEIVE	1:ACT	0:NON					
				B7	DR_RST_CMD_RCV_FLG	RESET COMMAND RECEIVE	1:ACT	0:NON					

Table B-2 Bilevel Data List (16/54)

S/S NAME	APID (2nd-H)	ADRS (Hex)	WORD	Bit	SYMBOL	ITEM	STATUS 1	STATUS 0				Inv. Cond	Sub. Cond
DR	01 (N/A)	F801	102	B0	DR_MB3_LATCHUP_FLG	LATCH UP M3	1:ACT	0:NON					
				B1	DR_MB2_LATCHUP_FLG	LATCH UP M2	1:ACT	0:NON					
				B2	DR_MB1_LATCHUP_FLG	LATCH UP M1	1:ACT	0:NON					
				B3	DR_MB0_LATCHUP_FLG	LATCH UP M0	1:ACT	0:NON					
				B4									
				B5									
				B6	DR_ECC_ON/OF	ECC ON/OFF	1:ON	0:OF					
				B7	DR_OVER_WRT_ON/OF	OVER WRITE ON/OFF	1:ON	0:OF					
DR	01 (N/A)	F810	107	B0									
				B1									
				B2									
				B3									
				B4	DR_HARD_ERR_MB3	HARD ERROR MB3	1:ACT	0:NON					
				B5	DR_HARD_ERR_MB2	HARD ERROR MB2	1:ACT	0:NON					
				B6	DR_HARD_ERR_MB1	HARD ERROR MB1	1:ACT	0:NON					
				B7	DR_HARD_ERR_MB0	HARD ERROR MB0	1:ACT	0:NON					
AOCE	01 (N/A)	8000	54	B0	AOCE_ON/OF	AOCE ON/OFF STATUS	ON	OF					
				B1	AOCE_AOCI_WDT_OVF	AOCI WATCH DOG TIMER OVERFLOW FLAG	ERR	NML					
				B2	AOCE_SSC_CAL	SSC CALIBRATION STATUS	CAL	NML					
				B3	AOCE_SSC_ON/OF	SSC ON/OFF STATUS	ON	OF					
				B4									
				B5									
				B6									
				B7									
AOCE	01 (N/A)	8001	55	B0	AOCE_OF_EN/DS	AOCE OFF ENABLE	EN	DS					
				B1	AOCE_MRM_OF_EN/DS	MRM OFF ENABLE	EN	DS					
				B2	AOCE_RST_EN/DS	AOCE RESET ENABLE	EN	DS					
				B3	AOCE_SSAS-B_OF_EN/DS	SSAS-B OFF ENABLE	EN	DS					
				B4	AOCE_SSAS-A_OF_EN/DS	SSAS-A OFF ENABLE	EN	DS					
				B5	AOCE_SSC_OF_EN/DS	SSC OFF ENABLE	EN	DS					
				B6	AOCE_GRS_OF_EN/DS	GRS OFF ENABLE	EN	DS					
				B7	AOCE_ACM_OF_EN/DS	ACM-B OFF ENABLE	EN	DS					
AOCE	01 (N/A)	8002	56	B0	AOCE_RCS_OF_EN/DS	RCS POWER OFF ENABLE	EN	DS					
				B1	AOCE_OMS_OF_EN/DS	OMS POWER OFF ENABLE	EN	DS					
				B2	AOCE_CONFIG_BC_EN/DS	CONFIG BC ENABLE	EN	DS					
				B3									
				B4									
				B5	AOCE_DE_EN/DS	DATA ERROR ENABLE	EN	DS					
				B6	AOCE_EE_EN/DS	EXTRA ERROE ENABLE	EN	DS					
				B7									

Table B-2 Bilevel Data List (17/54)

S/S NAME	APID (2nd-H)	ADRS (Hex)	WORD	Bit	SYMBOL	ITEM	STATUS 1	STATUS 0				Inv. Cond	Sub. Cond
AOCE	01 (N/A)	8003	57	B0	AOCE_RCS_DRV_ON/OF	RCS POWER ON/OFF STATUS	ON	OF					
				B1	AOCE_RCS_PARTY_EN/DS	RCS PARITY CHK ENABLE	EN	DS					
				B2	AOCE_RCS_WDT_EN/DS	RCS WDT CHK ENABLE	EN	DS					
				B3	AOCE_RCS_EN/DS	RCS ENABLE/DISABLE STATUS	EN	DS					
				B4	AOCE_RCS_CNTIN_EN/DS	RCS CONTINUE MODE ENABLE	EN	DS					
				B5	AOCE_RCS_PRTY_ERR_HK	RCS PARITY CHK ERROR	ERR	NML					
				B6	AOCE_RCS_WDT_OVF	RCS WDT OVERFLOW	ERR	NML					
				B7									
AOCE	01 (N/A)	8004	58	B0	AOCE_OMS_DRV_ON/OF	OMS DRIVER ON/OFF STATUS	ON	OF					
				B1	AOCE_OMS_BC_MASK	OMS MBT BC MASK	MASK	NML					
				B2	AOCE_OMS_EN/DS	OMS ENABLE/DISABLE STATUS	EN	DS					
				B3	AOCE_OMS_MBT_EN/DS	OMS MBT ENABLE	EN	DS					
				B4	AOCE_OMS_ERR	OMS MBT ERROR	ERR	NML					
				B5									
				B6	AOCE_DE_HK	DATA ERROR	ERR	NML					
				B7									
AOCE	01 (N/A)	8006	60	B0	AOCE_COMRAM-A_EN/DS	COMRAM-A EN/DS STATUS (CONFIG BC ANS BACK	EN	DS					
				B1	AOCE_COMRAM-B_EN/DS	COMRAM-B EN/DS STATUS (CONFIG BC ANS BACK	EN	DS					
				B2	AOCE_S_PORT-A_EN/DS	SYSTEM_PORT-A EN/DS STATUS (CONFIG BC ANS	EN	DS					
				B3	AOCE_S_PORT-B_EN/DS	SYSTEM_PORT-B EN/DS STATUS (CONFIG BC ANS	EN	DS					
				B4	AOCE_BUS-A_EN/DS	BUS-A EN/DS STATUS (CONFIG BC ANS BACK)	EN	DS					
				B5	AOCE_BUS-B_EN/DS	BUS-B EN/DS STATUS (CONFIG BC ANS BACK)	EN	DS					
				B6	AOCE_CM-A_EN/DS	CPU-A CM EN/DS STATUS (CONFIG BC ANS BACK	EN	DS					
				B7	AOCE_CM-B_EN/DS	CPU-B CM EN/DS STATUS (CONFIG BC ANS BACK	EN	DS					
AOCE	01 (N/A)	8007	61	B0	AOCE_SSAS-B_ON/OF	SSAS-B ON/OFF STATUS	ON	OF					
				B1	AOCE_SSAS-A_ON/OF	SSAS-A ON/OFF STATUS	ON	OF					
				B2	AOCE_GRS-A_ON/OF	GRS-A ON/OFF STATUS	ON	OF					
				B3	AOCE_GRS-B_ON/OF	GRS-B ON/OFF STATUS	ON	OF					
				B4	AOCE_ACM-A_ON/OF	ACM-A ON/OFF STATUS	ON	OF					
				B5	AOCE_ACM-B_ON/OF	ACM-B ON/OFF STATUS	ON	OF					
				B6	AOCE_ACM-C_ON/OF	ACM-C ON/OFF STATUS	ON	OF					
				B7	AOCE_ACM-D_ON/OF	ACM-D ON/OFF STATUS	ON	OF					
AOCE	01 (N/A)	8009	62	B0									
				B1									
				B2	AOCE_GATE_SIG_SELE	IP/PC GATE SIGNAL SELECTION	SP-2	SP-1					
				B3	AOCE_DLY_LGC_INP_SIG	DELAY LOGIC INPUT SIGNAL	GATE	NON					
				B4	AOCE_IP_CTR_INP_SIG	IP COUNTER INPUT SIGNAL	10:SSAS-A	00:SSAS-B	01:DELAY	11:NONSEL			
				B5									
				B6	AOCE_IP_PLS_SELECT	IP PULSE SELECT	IP	SW3					
				B7	AOCE_IP_EN/DS	IP/PC EN/DS FLAG	EN	DS					

Table B-2 Bilevel Data List (18/54)

S/S NAME	APID (2nd-H)	ADRS (Hex)	WORD	Bit	SYMBOL	ITEM	STATUS 1	STATUS 0				Inv. Cond	Sub. Cond
AOCE	01 (N/A)	800B	64	B0	AOCE_MRM-A_ON/OF	MRM-A ON/OFF STATUS	ON	OF					
				B1	AOCE_MRM-B_ON/OF	MRM-B ON/OFF STATUS	ON	OF					
				B2	AOCE_AOCP_MODE	AOCP MODE	00:MANUAL	01:SIMPLEX	10:DUPLEX	11:ERROR			
				B3									
				B4	AOCE_CM-A_SEL	CPU-A SELECTED CONTROL MASTER	SEL	MON					
				B5	AOCE_CM-B_SEL	CPU-B SELECTED CONTROL MASTER	SEL	MON					
				B6	AOCE_EM-A_ERR	CPU-A ERROR MARK SET	ERR	NML					
				B7	AOCE_EM-B_ERR	CPU-B ERROR MARK SET	ERR	NML					
AOCE	01 (N/A)	800D	66	B0	AOCE_CPU-A_ON/OF	CPU-A ON/OFF STATUS	ON	OF					
				B1	AOCE_CLK-A_ERR	CPU-A CLOCK ERROR	ERR	NML					
				B2	AOCE_BUSA-A_TIMOUT	CPU-A BUS-A TIME OUT	T/O	NML					
				B3	AOCE_BUSB-A_TIMOUT	CPU-A BUS-B TIME OUT	T/O	NML					
				B4	AOCE_LECC-A_EVEN2	CPU-A LOCAL MEM ECC 2BIT ERROR (EVEN ADD)	ERR	NML					
				B5	AOCE_LECC-A_ODD2	CPU-A LOCAL MEM ECC 2BIT ERROR (ODD ADD)	ERR	NML					
				B6	AOCE_LECC-A_EVEN1	CPU-A LOCAL MEM ECC 1BIT ERROR (EVEN ADD)	ERR	NML					
				B7	AOCE_LECC-A_ODD1	CPU-A LOCAL MEM ECC 1BIT ERROR (ODD ADD)	ERR	NML					
AOCE	01 (N/A)	800E	67	B0	AOCE_WDT-A_OVF	CPU-A AOCP WDT OVERFLOW	OVF	NML					
				B1	AOCE_SW-A_CHKERR	CPU-A S/W CHECK ERROR	ERR	NML					
				B2	AOCE_CPU-A_CHK_OK	CPU-A S/W CHECK OK	OK	--					
				B3									
				B4									
				B5									
				B6									
				B7	AOCE_CPU-A_OF_EN/DS	CPU-A OFF ENABLE	EN	DS					
AOCE	01 (N/A)	800F	68	B0	AOCE_CPU-B_ON/OF	CPU-B ON/OFF STATUS	ON	OF					
				B1	AOCE_CLK-B_ERR	CPU-B CLOCK ERROR	ERR	NML					
				B2	AOCE_BUSA-B_TIMOUT	CPU-B BUS-A TIME OUT	T/O	NML					
				B3	AOCE_BUSB-B_TIMOUT	CPU-B BUS-B TIME OUT	T/O	NML					
				B4	AOCE_LECC-B_EVEN2	CPU-B LOCAL MEM ECC 2BIT ERROR (EVEN ADD)	ERR	NML					
				B5	AOCE_LECC-B_ODD2	CPU-B LOCAL MEM ECC 2BIT ERROR (ODD ADD)	ERR	NML					
				B6	AOCE_LECC-B_EVEN1	CPU-B LOCAL MEM ECC 1BIT ERROR (EVEN ADD)	ERR	NML					
				B7	AOCE_LECC-B_ODD1	CPU-B LOCAL MEM ECC 1BIT ERROR (ODD ADD)	ERR	NML					
AOCE	01 (N/A)	8010	69	B0	AOCE_WDT-B_OVF	CPU-B AOCP WDT OVERFLOW	OVF	NML					
				B1	AOCE_SW-B_CHKERR	CPU-B S/W CHECK ERROR	ERR	NML					
				B2	AOCE_CPU-B_CHK_OK	CPU-B S/W CHECK OK	OK	--					
				B3									
				B4									
				B5									
				B6									
				B7	AOCE_CPU-B_OF_EN/DS	CPU-B OFF ENABLE	EN	DS					

Table B-2 Bilevel Data List (19/54)

S/S NAME	APID (2nd-H)	ADRS (Hex)	WORD	Bit	SYMBOL	ITEM	STATUS 1	STATUS 0				Inv. Cond	Sub. Cond
AOCE	01 (N/A)	8011	70	B0	AOCE_COM_RAM-A_SEL	COMMON RAM A SELECT FLAG	SEL	NON					
				B1	AOCE_CECC-A_EVEN2	COMMON RAM A ECC 2BIT ERROR (EVEN ADD)	ERR	NML					
				B2	AOCE_CECC-A_ODD2	COMMON RAM A ECC 2BIT ERROR (ODD ADD)	ERR	NML					
				B3	AOCE_CECC-A_EVEN1	COMMON RAM A ECC 1BIT ERROR (EVEN ADD)	ERR	NML					
				B4	AOCE_CECC-A_ODD1	COMMON RAM A ECC 1BIT ERROR (ODD ADD)	ERR	NML					
				B5									
				B6									
				B7									
AOCE	01 (N/A)	8012	71	B0	AOCE_BUS-A_SEL	BUS-A SELECT FLAG	SEL	NON					
				B1									
				B2									
				B3									
				B4	AOCE_SPORT-A_SEL	SYSTEM PORT A SELECT FLAG	SEL	NON					
				B5									
				B6									
				B7									
AOCE	01 (N/A)	8013	72	B0	AOCE_COM_RAM-B_SEL	COMMON RAM B SELECT FLAG	SEL	NON					
				B1	AOCE_CECC-B_EVEN2	COMMON RAM B ECC 2BIT ERROR (EVEN ADD)	ERR	NML					
				B2	AOCE_CECC-B_ODD2	COMMON RAM B ECC 2BIT ERROR (ODD ADD)	ERR	NML					
				B3	AOCE_CECC-B_EVEN1	COMMON RAM B ECC 1BIT ERROR (EVEN ADD)	ERR	NML					
				B4	AOCE_CECC-B_ODD1	COMMON RAM B ECC 1BIT ERROR (ODD ADD)	ERR	NML					
				B5									
				B6									
				B7									
AOCE	01 (N/A)	8014	73	B0	AOCE_BUS-B_SEL	BUS-B SELECT FLAG	SEL	NON					
				B1									
				B2									
				B3									
				B4	AOCE_SPORT-B_SEL	SYSTEM PORT B SELECT FLAG	SEL	NON					
				B5									
				B6									
				B7									
AOCE	01 (N/A)	8015	74	B0	AOCE_LV-3	LATCHING VALVE 3 OPEN/CLOSE STATUS	10:OPEN	01:CLOSE	00:ERR	11:ERR			
				B1	|							
				B2	AOCE_LV-4	LATCHING VALVE 4 OPEN/CLOSE STATUS	10:OPEN	01:CLOSE	00:ERR	11:ERR			
				B3	|							
				B4	AOCE_LV-5	LATCHING VALVE 5 OPEN/CLOSE STATUS	10:OPEN	01:CLOSE	00:ERR	11:ERR			
				B5	|							
				B6									
				B7									

Table B-2 Bilevel Data List (20/54)

S/S NAME	APID (2nd-H)	ADRS (Hex)	WORD	Bit	SYMBOL	ITEM	STATUS 1	STATUS 0				Inv. Cond	Sub. Cond
AOCE	01 (N/A)	8016	75	B0	AOCE_LV-6	LATCHING VALVE 6 OPEN/CLOSE STATUS	10:OPEN	01:CLOSE	00:ERR	11:ERR			
				B1	|							
				B2									
				B3									
				B4									
				B5									
				B6									
				B7									
AOCE	01 (N/A)	8007	61	B0	AOCE_SSAS_ON/OF_QL	SSAS-B ON/OFF STATUS	00:OF	OTR:ON					
				B1	|	SSAS-A ON/OFF STATUS							
				B2	AOCE_GRS_ON/OF_QL	GRS-A ON/OFF STATUS	00:OF	OTR:ON					
				B3	|	GRS-B ON/OFF STATUS							
				B4	AOCE_ACM_ON/OF_QL	ACM-A ON/OFF STATUS	0000:OF	OTR:ON					
				B5	|	ACM-B ON/OFF STATUS							
				B6	|	ACM-C ON/OFF STATUS							
				B7	|	ACM-D ON/OFF STATUS							
AOCE	01 (N/A)	8003	57	B0									
				B1									
				B2									
				B3									
				B4									
				B5	AOCE_RCS_ERR_QL	RCS ERROR STATUS	00:NML	OTR:ERR					
				B6	|								
				B7									
AOCE	01 (N/A)	F806	158	B0	AOCE_RAM/ROM_QL	S/W MODE	10:RAM	01:ROM	OTR:ERR			○	
				B1	|							
				B2									
				B3									
				B4									
				B5									
				B6									
				B7									
AOCE	01 (N/A)	F800	152	B0	AOCE_CS_STOP	CONTROL STATUS STOP	STP	CTL					
				B1	AOCE_CS_MEM	MEM SELECT	MEM	---					
				B2	AOCE_CS_SUNAC	SUN ACQUISITION MODE	SUN	---					
				B3	AOCE_CS_OFSET	SUN OFFSET MODE	OFS	---					
				B4	AOCE_CS_ANC	ACTIVE NUTATION CONTROL MODE	ANC	---					
				B5	AOCE_CS_GO	CONTROL GO	GO	---					
				B6	AOCE_CS_WPF	WAITING PULSE FINISH FLAG	WPF	---					
				B7	AOCE_CS_ACT	CONTROL ACTIVE	ACT	---					

Table B-2 Bilevel Data List (21/54)

S/S NAME	APID (2nd-H)	ADRS (Hex)	WORD	Bit	SYMBOL	ITEM	STATUS 1	STATUS 0				Inv. Cond	Sub. Cond
AOCE	01 (N/A)	F801	153	B0	AOCE_CS_SHD	SAFE HOLD MODE	SHD	---					
				B1	AOCE_CS_BK-TRK	BACK UP EARTH TRACK MODE	TRK	---					
				B2	AOCE_CS_ERT-AC	EARTH ACQUISITION MODE	PNT	---					
				B3	AOCE_CS_SRCH	EARTH SEARCH MODE	SRC	---					
				B4	AOCE_STOP_BY_CMD	CONTROL STOPPED BY COMMAND	CMD	---					
				B5	AOCE_STOP_BY_ERR	CONTROL STOPPED BY SOMETHING WRONG	ERR	---					
				B6	AOCE_STOP_BY_CMP	CONTROL STOPPED BY TARGET COMPLETE	CMP	---					
				B7	AOCE_STOP_BY_ACV	CONTROL STOPPED BY COUNTER ACHIEVE MAX	ACV	---					
AOCE	01 (N/A)	F802	154	B0	AOCE_SHD_HUP_PERIOD	SHD_HEAT-UP_PERIOD	00:60	01:30	10:90	11:5			
				B1	|	SHD_HEAT-UP_PERIOD								
				B2									
				B3	AOCE_SHD_PLS_WIDTH	SHD_PULSE_WIDTH	100	200					
				B4									
				B5									
				B6									
				B7	AOCE_BOOT_SELECT	ROM S/W BOOT SELECT	CDB	NML					
AOCE	01 (N/A)	F803	155	B0	AOCE_FORCED_CTL_STS	FORCED CTL EN/DS STATUS	EN	DS					
				B1	AOCE_FORCED_CTL_EXEC	FORCED CTL EXECUTED	EXE	---					
				B2	AOCE_DRFT_NOTIFY	DRIFT NOTIFY STATUS	01:EN	11:EXE	OTR:DS				
				B3	|							
				B4	AOCE_SSC1_ILL_INT	SSC-1 ILLIGAL INTERRUPT FLAG	1	-					
				B5	AOCE_SSC2_ILL_INT	SSC-2 ILLIGAL INTERRUPT FLAG	2	-					
				B6									
				B7	AOCE_SSC_PHASE_MSK	SSC PHASE MASK FLAG	PHS	---					
AOCE	01 (N/A)	F804	156	B0	AOCE_HEAT_UP	HEAT UP	H-UP	H-OF					
				B1	AOCE_WAIT	CONTROL WAIT FLAG	WAIT	RUN					
				B2	AOCE_CONTROL_END	CONTROL END FLAG	END	CTL					
				B3	AOCE_AOCI_WDT	AOCI WDT ENABLE FLAG	EN	DS					
				B4	AOCE_IP/PC	IP/PC ENABLE FLAG	EN	DS					
				B5	AOCE_USR_REQUEST_FLG	USER REQUEST SEND FLAG	REQ	---					
				B6	AOCE_REQACK_FLG	WAITING REQUEST ACK FLAG	ACK	---					
				B7	AOCE_SHD_DIS	SAFE HOLD DISABLE FLAG	DS	EN					
AOCE	01 (N/A)	F805	157	B0	AOCE_USE_SSAS_WATCH	USE SSAS FLAG FOR WATCHING SUN ANGLE	00:INVALD	01:SSAS-B	10:SSAS-A	11:NO_WCH			
				B1	|							
				B2	AOCE_WATCH_FLG	SUN ANGLE WATCHING FLAG	ON	OFF					
				B3	AOCE_ECLIPSE		IN	OUT					
				B4	AOCE_SAS-A_CNTR_CHK	SSAS-A CNTER CHECK STATUS	NG	OK					
				B5	AOCE_SAS-B_CNTR_CHK	SSAS-B CNTER CHECK STATUS	NG	OK					
				B6	AOCE_SAS-A_DISPT_CHK	SSAS-A DISPERTION CHECK STATUS	NG	OK					
				B7	AOCE_SAS-B_DISPT_CHK	SSAS-B DISPERTION CHECK STATUS	NG	OK					

Table B-2 Bilevel Data List (22/54)

S/S NAME	APID (2nd-H)	ADRS (Hex)	WORD	Bit	SYMBOL	ITEM	STATUS 1	STATUS 0				Inv. Cond	Sub. Cond
AOCE	01 (N/A)	F806	158	B0	AOCE_OBEYER_MODE	OBEYER CPU S/W MODE	00:---	01:ROM	10:RAM	11:---		○	
				B1	|							
				B2	AOCE_S/W_WDT_CHK	S/W SYNCRONIZE CHECK STATUS	ERR	NML				○	
				B3									
				B4									
				B5									
				B6									
				B7									
AOCE	01 (N/A)	F807	159	B0	AOCE_SSAS_DATA_ID_DM	SSAS_DATA_ID	000:ZERO	OTR:-----					
				B1	|	SSAS_DATA_ID						
				B2	|	SSAS_DATA_ID						
				B3									
				B4									
				B5									
				B6									
				B7									
AOCE	01 (N/A)	F807	159	B0	AOCE_SSAS_DATA_ID_HK	SSAS_DATA_ID	100:SSAS-A	010:SSAS-B	001:IP/PC	OTR:-----			○
				B1	|	SSAS_DATA_ID						
				B2	|	SSAS_DATA_ID						
				B3									
				B4									
				B5									
				B6									
				B7									
AOCE	01 (N/A)	F80C	164	B0									
				B1	AOCE_SSAS-A_GRAY	SSAS-A GRAY CODE VALID / INVALID	0000000:INVLD	OTR:VALID					○
				B2	|							
				B3	|							
				B4	|							
				B5	|							
				B6	|							
				B7	|							
AOCE	01 (N/A)	F80F	167	B0									
				B1	AOCE_SSAS-B_GRAY	SSAS-B GRAY CODE VALID / INVALID	0000000:INVLD	OTR:VALID					○
				B2	|							
				B3	|							
				B4	|							
				B5	|							
				B6	|							
				B7	|							

Table B-2 Bilevel Data List (23/54)

S/S NAME	APID (2nd-H)	ADRS (Hex)	WORD	Bit	SYMBOL	ITEM	STATUS 1	STATUS 0				Inv. Cond	Sub. Cond
AOCE	01 (N/A)	F817	175	B0	AOCE_SSC-B/A	SSC A/B SELECT	B	A					
				B1	AOCE_SSC-CIRCUIT	SSC CIRCUIT SETTING	01:A12	10:B12	OTR:SEP				
				B2	|							
				B3	AOCE_SSC-LOW/HI	SSC GAIN FLAG	LO	HI					
				B4	AOCE_SSC-DISCRI_LVL	SSC DISCRI LEVEL SETTING	00:HI	01:MH	10:ML	11:LO			
				B5	|							
				B6	AOCE_SSC-TIME_CONST	SSC TIME CONSTANT	00:7.0	01:7.5	10:8.0	11:9.5			
				B7	|							
AOCE	01 (N/A)		176;9	B0									
				B1									
				B2									
				B3	AOCE_SSC_DATA_ID_HK	SSC_DATA_ID	10:1	01:2	OTR:-				
				B4	|							
				B5									
				B6									
				B7									
AOCE	01 (N/A)	F83F	215	B0	AOCE_MASTER_ACT_ID	CONTROL_MASTER_ACTIVE_MODE_ID	10:RAM	01:ROM	OTR:---				
				B1	|							
				B2									
				B3									
				B4									
				B5									
				B6									
				B7									
AOCE	07 (3)	FA08	12	B0									
				B1									
				B2									
				B3									
				B4									
				B5									
				B6	AOCE_SSC_CAL/MES		CAL	MES				○	
				B7	AOCE_SSC_ON/OFF		ON	OF				○	
AOCE	07 (3)	FA09	13	B0	AOCE_SSC_B/A		B	A				○	
				B1	AOCE_SSC_CIRCUIT	SIGNAL_PROC_CIRCUIT_SYS_SEL	01:A12	10:B12	OTR:SEP			○	
				B2	|							
				B3	AOCE_SSC_GAIN	GAIN	LO	HI				○	
				B4	AOCE_SSC_DISCRI_LVL		00:HI	01:MH	10:ML	11:LO		○	
				B5	|							
				B6	AOCE_SSC_TIME_CONST		00:7.0	01:7.5	10:8.0	11:9.5		○	
				B7	|							

Table B-2 Bilevel Data List (24/54)

S/S NAME	APID (2nd-H)	ADRS (Hex)	WORD	Bit	SYMBOL	ITEM	STATUS 1	STATUS 0				Inv. Cond	Sub. Cond
AOCE	07 (3)	FA0A	14	B0	AOCE_SSAS-B_ON/OFF		ON	OF				○	
				B1	AOCE_SSAS-A_ON/OFF		ON	OF				○	
				B2	AOCE_GRS-A_ON/OFF		ON	OF				○	
				B3	AOCE_GRS-B_ON/OFF		ON	OF				○	
				B4	AOCE_ACM-A_ON/OFF		ON	OF				○	
				B5	AOCE_ACM-B_ON/OFF		ON	OF				○	
				B6	AOCE_ACM-C_ON/OFF		ON	OF				○	
				B7	AOCE_ACM-D_ON/OFF		ON	OF				○	
AOCE	07 (3)	FA0B	15	B0									
				B1	AOCE_OMS_PWR	OMS DRIVER POWER ON/OFF STATUS	ON	OF				○	
				B2	AOCE_OMS_DRV	OMS DRIVE STATUS	0	-				○	
				B3	AOCE_RCS_PWR	RCS DRIVER POWER ON/OFF STATUS	ON	OF				○	
				B4	AOCE_A1_DRV	AXIAL-1 THRUSTER DRIVE STATUS	0	-				○	
				B5	AOCE_A2_DRV	AXIAL-2 THRUSTER DRIVE STATUS	0	-				○	
				B6	AOCE_A3_DRV	AXIAL-3 THRUSTER DRIVE STATUS	0	-				○	
				B7	AOCE_A4_DRV	AXIAL-4 THRUSTER DRIVE STATUS	0	-				○	
AOCE	07 (3)	FA0C	16	B0	AOCE_R1_DRV	RADIAL-1 THRUSTER DRIVE STATUS	0	-				○	
				B1	AOCE_R2_DRV	RADIAL-2 THRUSTER DRIVE STATUS	0	-				○	
				B2									
				B3									
				B4	AOCE_T1_DRV	TANGENTIAL-1 THRUSTER DRIVE STATUS	0	-				○	
				B5	AOCE_T2_DRV	TANGENTIAL-2 THRUSTER DRIVE STATUS	0	-				○	
				B6	AOCE_T3_DRV	TANGENTIAL-3 THRUSTER DRIVE STATUS	0	-				○	
				B7	AOCE_T4_DRV	TANGENTIAL-4 THRUSTER DRIVE STATUS	0	-				○	
AOCE	07 (3)	25;10		B0	AOCE_SSAS_DATA_ID	SSAS_DATA_ID	10:A	01	OTR:-				
				B1	|	SSAS_DATA_ID								
				B2									
				B3									
				B4									
				B5									
				B6									
				B7									
AOCE	07 (3)	113;29		B0									
				B1									
				B2									
				B3	AOCE_SSC_DATA_ID	SSC__DATA_ID	10:1	01:2	OTR:-				
				B4	|	SSC__DATA_ID								
				B5									
				B6									
				B7									

Table B-2 Bilevel Data List (25/54)

S/S NAME	APID (2nd-H)	ADRS (Hex)	WORD	Bit	SYMBOL	ITEM	STATUS 1	STATUS 0				Inv. Cond	Sub. Cond
AOCE	07 (3)	FAE1	229	B0	AOCE_IP_MODE_SSAS		SSAS	----					
				B1	AOCE_IP_MODE_SSC		10:ACK	11:TRK	OTR:---				
				B2	|							
				B3	AOCE_IP_STS_WAIT_SP	WAITING SUN PULSE	WAIT	----					
				B4	AOCE_IP_STS_VALID	IP VALID	IP-V	----					
				B5	AOCE_IP_STS_STR_V	REFERENCE STAR PULSE VALID	SP-V	----					
				B6	AOCE_IP_STS_PAUSE	IP/PC PROCESS PAUSE FLAG	PAUSE	-----					
				B7	AOCE_IP_MODE_CNTIN	IP CONTINUOUS MODE FLAG	CONTI	NOCNT					
AOCE	07 (3)	FAE2	230	B0									
				B1									
				B2	AOCE_IP_REF_SSAS	IP REFERENCE SSAS FLAG	10:SSAS-A	01:SSAS-B	OTR:------				
				B3	|							
				B4									
				B5									
				B6	AOCE_IP_REF_SSC	IP REFERENCE SSC FLAG	10:SSC-1	01:SSC-2	OTR:-----				
				B7	|							
AOCE	07 (3)	FAFB	255	B0	AOCE_BC_GATE	GATE SETTING (IP/PC MANUAL MODE BC ANS)	OPEN	CLOSE					
				B1									
				B2									
				B3	AOCE_BC_SW1	SWITCH 1 SETTING (IP/PC MANUAL MODE BC A	SP-2	SP-1					
				B4	AOCE_BC_SW2	SWITCH 2 SETTING (IP/PC MANUAL MODE BC A	GATE	NONE					
				B5	AOCE_BC_SW3	SWITCH 3 SETTING (IP/PC MANUAL MODE BC A	10:SSAS-A	00:SSAS-B	01:DELAY	OTR:------			
				B6	|							
				B7	AOCE_BC_SW4	SWITCH 4 SETTING (IP/PC MANUAL MODE BC A	IP	SW3					
AOCE	07 (3)	FB0F	275	B0									
				B1									
				B2									
				B3									
				B4									
				B5									
				B6	AOCE_BC_TLM_OUT_SSAS	BC ANS OF SSAS TELEMETRY OUT DATA	11:A+B	10:A	01:B	00:NON			
				B7	|							
AOCE	07 (3)	FB10	276	B0									
				B1									
				B2									
				B3									
				B4									
				B5									
				B6	AOCE_BC_SSC_MSK_SEL	BC ANS OF SSC PHASE MASK REFERENCE SSAS	10:SSAS-A	01:SSAS-B	OTR:------				
				B7	|							

Table B-2 Bilevel Data List (26/54)

S/S NAME	APID (2nd-H)	ADRS (Hex)	WORD	Bit	SYMBOL	ITEM	STATUS 1	STATUS 0				Inv. Cond	Sub. Cond
AOCE	07 (3)	FB15	281	B0									
				B1									
				B2									
				B3									
				B4									
				B5									
				B6	AOCE_BC_WCH_SAS_WORK	BC ANS OF REF SSAS FLAG OF THETA-S CHECK	11:SW	10:A	01:B	00:NO			
				B7	|							
AOCE	07 (3)	FB1C	288	B0	AOCE_BC_ACM_RCS	BC ANS OF REF ACM FOR RCS CONTROL	100:A	010	110:AB	001:C			
				B1	|		OTR:--					
				B2	|							
				B3									
				B4									
				B5									
				B6	AOCE_BC_ACM_OMS	BC ANS OF REF ACM FOR OMS CONTROL	10:C	01:D	OTR:-				
				B7	|							
AOCE	07 (3)	FB21	293	B0	AOCE_BC_MEM_SSAS_SEL	REF SSAS FOR MEM SELECT CONTROL	10:SSAS-A	01:SSAS-B	OTR:NA				
				B1	|							
				B2	AOCE_SP_WATCH	SUN PULSE TIMEOUT WATCH FLAG	ON	OF					
				B3	AOCE_SUN_ANGLE_WATCH	SUN ANGKE DISPLACE CHECK FLAG	ON	OF					
				B4	AOCE_USE_ACM_BIAS	USE ESTIMATE ACM BIAS FLAG	OBS	BC					
				B5	AOCE_NTO_DRY	NTO DRY CHECK FLAG	ON	OF					
				B6									
				B7	AOCE_CTL_BY_IP/PC	IP REFERENCE CONTROL FLAG	IP-CTL	NML					
AOCE	07 (3)	FB38	316	B0									
				B1									
				B2	AOCE_BC_IP_REF_SSAS	BC ANS BACK	10:SAS-A	01:SAS-B	OTR:---				
				B3	|							
				B4									
				B5									
				B6	AOCE_BC_IP_REF_SSC	BCANS BACK	10:SSC-2	01:SSC-1	OTR:---				
				B7	|							
AOCE	07 (3)	FB50	340	B0	AOCE_OMS_STATUS	OMS EN/DS FLAG	EN	DS					
				B1	AOCE_OMS_SEL	OMS/RCS CONTROL FLAG	SEL	NON					
				B2	AOCE_RCS_STATUS	RCS EN/DS FLAG	EN	DS					
				B3	AOCE_STOP	CONTROL STATUS STOP	STP	CTL					
				B4	AOCE_MEM_SEL	MEM SELECT	MEM	---					
				B5	AOCE_SUNAC_MODE	SUN ACQUISITION MODE	SUN	---					
				B6	AOCE_OFSET_MODE	SUN OFFSET MODE	OFS	---					
				B7	AOCE_ANC_MODE	ACTIVE NUTATION CONTROL MODE	ANC	---					

Table B-2 Bilevel Data List (27/54)

S/S NAME	APID (2nd-H)	ADRS (Hex)	WORD	Bit	SYMBOL	ITEM	STATUS 1	STATUS 0				Inv. Cond	Sub. Cond
AOCE	07 (3)	FB51	341	B0	AOCE_CONTROL_GO	CONTROL GO	GO	---					
				B1	AOCE_WAIT_PLS_FIN	WAITING PULSE FINISH FLAG	WPF	---					
				B2	AOCE_CONTROL_ACT	CONTROL ACTIVE	ACT	---					
				B3	AOCE_SHD	SAFE HOLD MODE	SHD	---					
				B4	AOCE_BK-TRK	BACK UP EARTH TRACK MODE	TRK	---					
				B5	AOCE_ERT-AC	EARTH ACQUISITION MODE	PNT	---					
				B6	AOCE_SRCH	EARTH SEARCH MODE	SRC	---					
				B7	AOCE_CTL_PAUSE	WAITING RCS EN (IN FORCED CONTROL CONTINU	PUS	---					
AOCE	07 (3)	FB52	342	B0	AOCE_STOP_CMD_RCS	STOPPED BY COMMAND RCS STOP(54H) OR CTL-D	RST	---					
				B1	AOCE_STOP_CMD_OMS	STOPPED BY OMS STOP(64H)	OST	---					
				B2	AOCE_ADM_SP	STOPPED BY SUN PULSE TIMEOUT	NSP	---					
				B3	AOCE_ADM_AD	STOPPED BY SUN ANGLE DISPLACE OR DIRECTIO	DFT	---					
				B4	AOCE_CMD_ERR	STOPPED BY COMMAND ERR	CMD	---					
				B5	AOCE_STATUS_ERR	STOPPED BY STATUS ERR	STS	---					
				B6	AOCE_NTO_EMPTY	STOPPED BY NTO EMPTY	NTO	---					
				B7	AOCE_TGT_SPN	STOP BY SPIN RATE TARGET COMPLETED	SPN	---					
AOCE	07 (3)	FB53	343	B0	AOCE_TGT_THS	STOP BY THETA-S TARGET COMPLETED	THS	---					
				B1	AOCE_TGT_VAX	STOP BY AX DELTA-V TARGET COMPLETED	VAX	---					
				B2	AOCE_TGT_VRD	STOP BY RD DELTA-V TARGET COMPLETED	VRD	---					
				B3	AOCE_TGT_OMS	STOP BY OMS DELTA-V TARGET COMPLETED	OMS	---					
				B4	AOCE_ANC_PLS	ANC PULSE FINISHED	ANC	---					
				B5	AOCE_JET_TIM	STOP BY JET TIME ACHIEVED (CONTINUE FIRIN	TIM	---					
				B6	AOCE_JET_NPI	STOP BY PULSE COUNTER ACHIEVED (INTERVAL	NPI	---					
				B7	AOCE_JET_NPP	STOP BY PULSE COUNTER ACHIEVED (PHASE FIR	NPP	---					
AOCE	07 (3)	FB54	344	B0	AOCE_TGT_MODE	TARGET MODE	0000:NOTGT	1000: SPIN	1010:AX-DV	OTR:-----			
				B1	|		1001:THT-S	1011:RD-DV				
				B2	|			1100:OMSDV				
				B3	|							
				B4									
				B5									
				B6									
				B7									
AOCE	07 (3)	FB55	345	B0	AOCE_SSAS_CAL_STATUS		01:CAL	11:CAL	OTR:---				
				B1	|							
				B2									
				B3	AOCE_IPPC_CTL_MODE	CONTROL BY IP MODE FLAG	ON	OF					
				B4	AOCE_OMS_DRY_STATUS	OMS NTO EMPTY STATUS	10:STRT	11:EXEC	OTR:----				
				B5	|							
				B6	AOCE_NO_SAS_TIME_CHK		NSP	---					
				B7	AOCE_SAS_DRIFT	SAS DRIFT NOTIFY FLAG	DFT	---					

Table B-2 Bilevel Data List (28/54)

S/S NAME	APID (2nd-H)	ADRS (Hex)	WORD	Bit	SYMBOL	ITEM	STATUS 1	STATUS 0				Inv. Cond	Sub. Cond
AOCE	07 (3)	FB56	346	B0	AOCE_BIAS_ESTIMATE		ON	OF					
				B1	AOCE_OBS_ESTMT_BIAS		OBS	CMD					
				B2	AOCE_INTEGRATED	ACM INTEGRATED FLAG	EXE	---					
				B3	AOCE_INTGR_END	WAITING OMS END FLAG (FOR OMS DELTA-V)	WAIT	----					
				B4	AOCE_ACM-A	VALID ACM FLAG	A	-					
				B5	AOCE_ACM-B		B	-					
				B6	AOCE_ACM-C		C	-					
				B7	AOCE_ACM-D		D	-					
AOCE	07 (3)	FB65	361	B0	AOCE_RCS_EN/DIS		EN	DS					
				B1	AOCE_OMS_EN/DIS		EN	DS					
				B2	AOCE_AOCI_WDTOVF_ERR		ERR	NML					
				B3	AOCE_RCS_PARITY_ERR		ERR	NML					
				B4	AOCE_RCS_WDT_ERR		ERR	NML					
				B5	AOCE_OMS_MBT_ERR		ERR	NML					
				B6	AOCE_DE		ERR	NML					
				B7	AOCE_EE		ERR	NML					
AOCE	07 (3)	FB66	362	B0	AOCE_COMRAM_A		EN	DS					
				B1	AOCE_COMRAM_B		EN	DS					
				B2	AOCE_S-PORT_A		EN	DS					
				B3	AOCE_S-PORT_B		EN	DS					
				B4	AOCE_BUS_A		EN	DS					
				B5	AOCE_BUS_B		EN	DS					
				B6	AOCE_CM_A		EN	DS					
				B7	AOCE_CM_B		EN	DS					
AOCE	07 (3)	FB67	363	B0	AOCE_EE_ENBL		EN	DS					
				B1	AOCE_DE_ENBL		EN	DS					
				B2	AOCE_OMS_GO_FLG		GO	NOT					
				B3	AOCE_OMS_MBT_ENBL		EN	DS					
				B4	AOCE_RCS_WDT_ENBL		EN	DS					
				B5	AOCE_RCS_PARITY_ENBL		EN	DS					
				B6	AOCE_CMD_FLG9		EN	DS					
				B7	AOCE_CMD_FLG8		EN	DS					
AOCE	07 (3)	FB68	364	B0	AOCE_CMD_FLG7		EN	DS					
				B1	AOCE_CMD_FLG6		EN	DS					
				B2	AOCE_CMD_FLG5		EN	DS					
				B3	AOCE_CMD_FLG4		EN	DS					
				B4	AOCE_CMD_FLG3		EN	DS					
				B5	AOCE_CMD_FLG2		EN	DS					
				B6	AOCE_CMD_FLG1		EN	DS					
				B7	AOCE_CMD_FLG0		EN	DS					

Table B-2 Bilevel Data List (29/54)

S/S NAME	APID (2nd-H)	ADRS (Hex)	WORD	Bit	SYMBOL	ITEM	STATUS 1	STATUS 0				Inv. Cond	Sub. Cond
AOCE	07 (3)	FB6C	368	B0	AOCE_OMS_SELECT		OMS	RCS					
				B1									
				B2	AOCE_CTL_MODE	FIRING CONTROL MODE FLAG	00:---	01:PHS	10:INT	11:CNT			
				B3	|							
				B4	AOCE_PHS_MODE	PHASE FIRING MODE FLAG	00:1/1	01:2/1	10:---	11:PHS			
				B5	|							
				B6									
				B7	AOCE_ON_MODULATION		ON	--					
AOCE	07 (3)	FB6C	368	B0	AOCE_JET_OMS	OMS DRIVE STATUS	0	-					
				B1									
				B2									
				B3									
				B4									
				B5									
				B6									
				B7									
AOCE	07 (3)	FB6D	369	B0	AOCE_JET_CTL_ID	JET CONTROL CLIENT ID	0011:POINT	0110:TS-TGT	1000:SPIN	1100:OMS-DV			
				B1	|		0100:SRCH		1001:REORI	1101:MANUAL		
				B2	|		0101:TRACK		1010:AX-DV	OTR:------		
				B3	|				1011:RD-DV			
				B4									
				B5									
				B6									
				B7									
AOCE	07 (3)	FB6E	370	B0									
				B1									
				B2									
				B3									
				B4	AOCE_JET1_A1	JET DRIVE STATUS	0	-					
				B5	AOCE_JET1_A2		0	-					
				B6	AOCE_JET1_A3		0	-					
				B7	AOCE_JET1_A4		0	-					
AOCE	07 (3)	FB6F	371	B0	AOCE_JET1_R1		0	-					
				B1	AOCE_JET1_R2		0	-					
				B2									
				B3									
				B4	AOCE_JET1_T1		0	-					
				B5	AOCE_JET1_T2		0	-					
				B6	AOCE_JET1_T3		0	-					
				B7	AOCE_JET1_T4		0	-					

Table B-2 Bilevel Data List (30/54)

S/S NAME	APID (2nd-H)	ADRS (Hex)	WORD	Bit	SYMBOL	ITEM	STATUS 1	STATUS 0				Inv. Cond	Sub. Cond
AOCE	07 (3)	FB70	372	B0									
				B1									
				B2									
				B3									
				B4	AOCE_JET2_A1	JET DRIVE STATUS(@ 2IN1)							
				B5	AOCE_JET2_A2		0	-					
				B6	AOCE_JET2_A3		0	-					
				B7	AOCE_JET2_A4		0	-					
AOCE	07 (3)	FB71	373	B0	AOCE_JET2_R1		0	-					
				B1	AOCE_JET2_R2		0	-					
				B2									
				B3									
				B4	AOCE_JET2_T1								
				B5	AOCE_JET2_T2		0	-					
				B6	AOCE_JET2_T3		0	-					
				B7	AOCE_JET2_T4		0	-					
AOCE	07 (3)	FB8C	400	B0									
				B1									
				B2									
				B3									
				B4	AOCE_MD_A1	ON-MODULATION THRUSTER SETTING							
				B5	AOCE_MD_A2		0	-					
				B6	AOCE_MD_A3		0	-					
				B7	AOCE_MD_A4		0	-					
AOCE	07 (3)	FB8F	403	B0	AOCE_BUS_ERR		0	-					
				B1	AOCE_COMRAM_ERR		BUS	---					
				B2	AOCE_PIM_ERR		CRAM	----					
				B3	AOCE_S-PORT_ERR		PIM	---					
				B4			SPRT	----					
				B5									
				B6									
				B7	AOCE_SUNANGL_ABNML	SW-CHK-ERROR BY SUN ANGLE ABNOMAL							
AOCE	07 (3)	FB90	404	B0	AOCE_CPU-A_SW_MODE		SANG	----					
				B1			1O:RAM	01:ROM	OTR:---			○	
				B2									
				B3									
				B4									
				B5									
				B6									
				B7									

Table B-2 Bilevel Data List (31/54)

S/S NAME	APID (2nd-H)	ADRS (Hex)	WORD	Bit	SYMBOL	ITEM	STATUS 1	STATUS 0				Inv. Cond	Sub. Cond
AOCE	07 (3)	FB9C	416	B0									
				B1									
				B2									
				B3								○	
				B4	AOCE_A_BUS-B_TIM_OUT		ERR	NML				○	
				B5	AOCE_A_BUS-A_TIM_OUT		ERR	NML				○	
				B6	AOCE_A_VERIFY_ERR		10:FFFF	01:0000	11:BOTH	00:----			
				B7	|						○	
AOCE	07 (3)	FB9E	418	B0	AOCE_CPU-B_SW_MODE		10:RAM	01:ROM	OTR:---				
				B1	|							
				B2									
				B3									
				B4									
				B5									
				B6									
				B7									
AOCE	07 (3)	FBAA	430	B0									
				B1									
				B2									
				B3								○	
				B4	AOCE_B_BUS-B_TIM_OUT		ERR	NML				○	
				B5	AOCE_B_BUS-A_TIM_OUT		ERR	NML				○	
				B6	AOCE_B_VERIFY_ERR		10:FFFF	01:0000	11:BOTH	00:----			
				B7	|							
AOCE	07 (4)	FA8B	43;8	B0									
				B1									
				B2									
				B3									
				B4	AOCE_BC_RCS_MEM_ID		1000:SPN	1001:REO	1010:AXV	1011:RDV	1100:OMS		
				B5	|		1101:MNU	OTR:---					
				B6	|								
				B7	|								
AOCE	07 (4)	FA96	T54	B0									
				B1									
				B2									
				B3									
				B4									
				B5									
				B6	AOCE_BC_AT_SAS_ID	REFERENCE SSAS FOR AUTO CONTROL	10:A	01	OTR:---				
				B7	|								

Table B-2 Bilevel Data List (32/54)

S/S NAME	APID (2nd-H)	ADRS (Hex)	WORD	Bit	SYMBOL	ITEM	STATUS 1	STATUS 0				Inv. Cond	Sub. Cond
AOCE	07 (4)	FA97	155	B0	AOCE_BC_ERT_F_SUNTGT	SUN ANGLE TARGET FLAG FOR AUTO EARTH ACQU	ON	--					
				B1									
				B2									
				B3									
				B4									
				B5									
				B6									
				B7									
AOCE	07 (4)	FADD	225	B0	AOCE_BC_GATE(ROM)	(*:ROM ONLY)	OPEN	CLOSE					
				B1									
				B2									
				B3	AOCE_BC_SW1(ROM)		SP-2	SP-1					
				B4	AOCE_BC_SW2(ROM)		GATE	----					
				B5	AOCE_BC_SW3(ROM)		10:SSAS-A	00:SSAS-B	01:DELAY	11:------			
				B6	|							
				B7	AOCE_BC_SW4(ROM)		IP	SW3					
AOCE	07 (4)	FAE2	230	B0		(*:ROM ONLY)							
				B1									
				B2									
				B3									
				B4									
				B5									
				B6	AOCE_BC_MSK_SEL(ROM)		10:SSAS-A	01:SSAS-B	OTR:------				
				B7	|							
AOCE	07 (4)	FAEE	2;12	B0									
				B1									
				B2									
				B3	AOCE_JCR_KILLED_STS		END	---					
				B4									
				B5									
				B6	AOCE_JCR_ACTIVE		00:SLEEP	01:WAIT	10:EXEC	11:-----			
				B7	|							
AOCE	07 (4)	FAEF	3;12	B0									
				B1									
				B2									
				B3									
				B4									
				B5									
				B6									
				B7	AOCE_RCS_SET_ON		FIRE	OFF					

Table B-2 Bilevel Data List (33/54)

S/S NAME	APID (2nd-H)	ADRS (Hex)	WORD	Bit	SYMBOL	ITEM	STATUS 1	STATUS 0				Inv. Cond	Sub. Cond
AOCE	07 (4)	FAF0	4;12	B0									
				B1									
				B2									
				B3									
				B4	AOCE_JCR_A1		0	-					
				B5	AOCE_JCR_A2		0	-					
				B6	AOCE_JCR_A3		0	-					
				B7	AOCE_JCR_A4		0	-					
AOCE	07 (4)	FAF1	5;12	B0	AOCE_JCR_R1		0	-					
				B1	AOCE_JCR_R2		0	-					
				B2									
				B3									
				B4	AOCE_JCR_T1		0	-					
				B5	AOCE_JCR_T2		0	-					
				B6	AOCE_JCR_T3		0	-					
				B7	AOCE_JCR_T4		0	-					
AOCE	07 (4)	FB57	347	B0									
				B1									
				B2	AOCE_REF_SSAS		00:ERR	01:SSAS-B	10:SSAS-A	11:ERR			
				B3	|								
				B4									
				B5									
				B6									
				B7	AOCE_CTL_SUN_ANG_FLG		VALID	INVLID					
AOCE	07 (4)	FB73	375	B0	AOCE_COMPUTED_STATUS	AUTO EARTH ACQUISITOIN PARAMETER COMPUTED	0000:INIT:	0001:COLCT	0010:EXEC	0011:CMPLT	0100:STDBY		
				B1	|					OTR:-----		
				B2	|							
				B3	|							
				B4	AOCE_ERROR_STATUS	AUTO EARTH ACQUISITOIN ERROR STATUS	0001:SSCOF	0010:SSCCIR	1000:CALER0	1010:CALER2	1100:CALER4		
				B5	|		0000:OK	0100:DATA_E	1001:CALER1	1011:CALER3	1101:CALER5		
				B6	|						OTR:------		
				B7	|								
AOCE	07 (4)	FB76	378	B0									
				B1									
				B2									
				B3	AOCE_SRCH_STS_ID	SRCH_MODE_STATUS_ID	SCH	ACQ					
				B4									
				B5									
				B6									
				B7									

Table B-2 Bilevel Data List (34/54)

S/S NAME	APID (2nd-H)	ADRS (Hex)	WORD	Bit	SYMBOL	ITEM	STATUS 1	STATUS 0				Inv. Cond	Sub. Cond
AOCE	07 (4)	FB83	391	B0	AOCE_OMS_SELECT_ROM	(*:ROM ONLY)	SEL	NON				○	
				B1									
				B2	AOCE_CTL_MODE_ROM		00:---	01:PHS	10:INT	11:CNT		○	
				B3	|							
				B4	AOCE_PHS_MODE_ROM		00:1/1	01:2/1	10:---	11:PHS		○	
				B5	|							
				B6									
				B7	AOCE_ON_MOD_ROM		ON	OF				○	
AOCE	07 (4)	FB85	393	B0		(*:ROM ONLY)							
				B1									
				B2									
				B3									
				B4	AOCE_JCR_A1_ROM		0	-				○	
				B5	AOCE_JCR_A2_ROM		0	-				○	
				B6	AOCE_JCR_A3_ROM		0	-				○	
				B7	AOCE_JCR_A4_ROM		0	-				○	
AOCE	07 (4)	FB86	394	B0	AOCE_JCR_R1_ROM	(*:ROM ONLY)	0	-				○	
				B1	AOCE_JCR_R2_ROM		0	-				○	
				B2									
				B3									
				B4	AOCE_JCR_T1_ROM		0	-				○	
				B5	AOCE_JCR_T2_ROM		0	-				○	
				B6	AOCE_JCR_T3_ROM		0	-				○	
				B7	AOCE_JCR_T4_ROM		0	-				○	
AOCE	07 (4)	FB97	411	B0									
				B1									
				B2									
				B3	AOCE_SEND_RQEST_FLAG	USER REQUEST SEND FLAG	ON	OF					
				B4									
				B5	AOCE_UREQ_ERROR_FLAG		01:ERR	11:ERR	OTR:---				
				B6	|							
				B7	AOCE_RESEND_FLAG	USER REQUEST RESEND FLAG	ON	OF					
AOCE	07 (4)	FBA0	420	B0	AOCE_MANUAL_R/W	MANUAL READ/WRITE MODE FLAG	1000:I/OR	0100:I/OW	0010:MEMR	0001:MEMW	OTR:----	○	
				B1	|	(*:ROM ONLY)						
				B2	|							
				B3	|							
				B4	AOCE_MEM_PTRL_START	MEMORY PATROL FLAG	WID	LMT				○	
				B5	AOCE_CM_CONTROL	CONTROL MASTER FLAG	EN	DS				○	
				B6	AOCE_BUS_SELECT		B	A				○	
				B7	AOCE_CM_SELECT		B	A				○	

Table B-2 Bilevel Data List (35/54)

S/S NAME	APID (2nd-H)	ADRS (Hex)	WORD	Bit	SYMBOL	ITEM	STATUS 1	STATUS 0				Inv. Cond	Sub. Cond
AOCE	07 (4)	FBA1	421	B0		(*:ROM ONLY)							
				B1								○	
				B2	AOCE_TRNSLT_LOAD_DIF	(FOR DEBUG)	DIF	---				○	
				B3	AOCE_RAM_CLEAR_OK	RAM CLR FINISHED	END	---				○	
				B4	AOCE_RAM_CLEAR	RAM CLR PROCESSING	EXE	---				○	
				B5	AOCE_IPL_WAIT_FLAG	(FOR DEBUG)	WAIT	----				○	
				B6	AOCE_IPL_PROCESSING		IPL	---				○	
				B7	AOCE_LOAD_PROCESSING		LOAD	----				○	
AOCE	07 (5)	FA08	12	B0	AOCE_TLM_ACM_A	ACM DATA ID	SEL	NON					○
				B1	AOCE_TLM_ACM_B		SEL	NON					○
				B2	AOCE_TLM_ACM_C		SEL	NON					○
				B3	AOCE_TLM_ACM_D		SEL	NON					○
				B4									
				B5									
				B6									
				B7									
AOCE	07 (5)	FA08	12	B0	AOCE_TLM_ACM_M3_H	ACM DATA ID	ACM-A	-----					○
				B1	AOCE_TLM_ACM_M3_L		100:ACM-B	010:ACM-C	001:ACM-D	OTR:-----			○
				B2	|							
				B3	|							
				B4									
				B5									
				B6									
				B7									
AOCE	07 (1)	FAF0	240	B0									
				B1									
				B2									
				B3									
				B4	AOCE_BC_ANC_REF_SEL		SAS	GRS					
				B5									
				B6									
				B7									
AOCE	07 (1)	FA08	12	B0	AOCE_TLM_ACM_L2		0001:D	OTR:-					
				B1	|								
				B2	|								
				B3	|								
				B4	AOCE_TLM_GRS_A_L2		A	-					
				B5	AOCE_TLM_GRS_B_L2		B	-					
				B6									
				B7									

Table B-2 Bilevel Data List (36/54)

S/S NAME	APID (2nd-H)	ADRS (Hex)	WORD	Bit	SYMBOL	ITEM	STATUS 1	STATUS 0				Inv. Cond	Sub. Cond
AOCE	07 (1)	FB2F	307	B0	AOCE_L_RCS_EN/DIS		EN	DS					
				B1	AOCE_L_OMS_EN/DIS		EN	DS					
				B2	AOCE_L_AOCI_WDT_ERR		ERR	NML					
				B3	AOCE_L_RCS_PRTY_ERR		ERR	NML					
				B4	AOCE_L_RCS_WDT_ERR		ERR	NML					
				B5	AOCE_L_OMS_MBT_ERR		ERR	NML					
				B6	AOCE_L_DE		ERR	NML					
				B7	AOCE_L_EE		ERR	NML					
AOCE	07 (1)	FB30	308	B0	AOCE_L_COMRAM_A		EN	DS					
				B1	AOCE_L_COMRAM_B		EN	DS					
				B2	AOCE_L_S-PORT_A		EN	DS					
				B3	AOCE_L_S-PORT_B		EN	DS					
				B4	AOCE_L_BUS_A		EN	DS					
				B5	AOCE_L_BUS_B		EN	DS					
				B6	AOCE_L_CM_A		EN	DS					
				B7	AOCE_L_CM_B		EN	DS					
AOCE	07 (1)	FB5D	353	B0	AOCE_INJ_CTL_ENABLE		EN	DS					
				B1	AOCE_INJ_CTL_EXEC		GO	--					
				B2	AOCE_INJ_CNT_FINISH		END	---					
				B3	AOCE_ACM-D_BIAS_EST		EST	---					
				B4	AOCE_ACM-D_BIAS_FIN		END	---					
				B5	AOCE_ACM-D_INTEGRATE		EXE	---					
				B6	AOCE_ACM-D_INTEG_FIN		END	---					
				B7	AOCE_MAKE_ATDV_PRM		END	---					
AOCE	07 (1)	FB5E	354	B0	AOCE_INJ_CTL_EXE_FLG		EXE	---					
				B1	AOCE_REF_INJ_CTL_FLG		REF	---					
				B2									
				B3									
				B4									
				B5									
				B6									
				B7									
AOCE	07 (2)	FA08	12	B0	AOCE_TLM_ACM_L3		0001:D	0TR:-					
				B1	|								
				B2	|								
				B3	|								
				B4	AOCE_TLM_GRS_A_L3		A	-					
				B5	AOCE_TLM_GRS_B_L3		B	-					
				B6									
				B7									

Table B-2 Bilevel Data List (37/54)

S/S NAME	APID (2nd-H)	ADRS (Hex)	WORD	Bit	SYMBOL	ITEM	STATUS 1	STATUS 0				Inv. Cond	Sub. Cond
PSA	01 (N/A)	8000	108	B0	PSA_ECC_2BITS_ERR		ERR	NON				○	
				B1	PSA_ECC_1BIT_ERR		ERR	NON				○	
				B2	PSA_ECC_ENA/DIS		ENA	DIS				○	
				B3	PSA_HTR_ENA/DIS		ENA	DIS				○	
				B4	PSA_WDT_ERR		ERR	NON				○	
				B5	PSA_WDT_ENA/DIS		ENA	DIS				○	
				B6	PSA_CPU_RUN/RST		RUN	RST				○	
				B7	PSA_CPU_ON/OFF		ON:G	OFF				○	
PSA	01 (N/A)	F800	109	B0	PSA_EIS_ON/OFF		ON	OFF				○	○
				B1	PSA_EIS_SSD_ENA/DIS		ENA	DIS				○	○
				B2	PSA_EIS_MCP_ENA/DIS		ENA	DIS				○	○
				B3	PSA_EIS_SSD_ON/OFF		1:ON	0:OFF				○	○
				B4	PSA_EIS_MCP_ON/OFF		1:ON	0:OFF				○	○
				B5	PSA_ADD_ONE_ENA/DIS		ENA	DIS				○	○
				B6	PSA_ANTI_ENA/DIS		ENA	DIS				○	○
				B7	PSA_EIS_CAL_ON/OFF		ON	OFF				○	○
PSA	01 (N/A)	F801	110	B0	PSA_PAX_ON/OFF		ON	OFF				○	○
				B1	PSA_H32_RUN/RST		RUN	RST				○	○
				B2	PSA_H32_RUN/HLT		RUN	HLT				○	○
				B3	PSA_H32_ENA/FLT		ENA	FLT				○	○
				B4	PSA_H32_ECC_1BIT_ER		ERR	NON				○	○
				B5	PSA_H32_ECC_2BIT_ER		ERR	NON				○	○
				B6	PSA_SF_ENA/DIS		ENA	DIS				○	○
				B7	PSA_H32_ON/OFF		ON	OFF				○	○
PSA	01 (N/A)	F802	111	B0	PSA_ESA_MCP_ENA/DIS		ENA	DIS				○	○
				B1	PSA_ESA_MCP_ON/OFF		1:ON	0:OFF				○	○
				B2	PSA_ESA_SV_ENA/DIS		ENA	DIS				○	○
				B3	PSA_ESA_SV_ON/OFF		1:ON	0:OFF				○	○
				B4	PSA_ISA_MCP_ENA/DIS		ENA	DIS				○	○
				B5	PSA_ISA_MCP_ON/OFF		1:ON	0:OFF				○	○
				B6	PSA_ISA_SV_ENA/DIS		ENA	DIS				○	○
				B7	PSA_ISA_SV_ON/OFF		1:ON	0:OFF				○	○
PSA	01 (N/A)	F803	112	B0	PSA_XUV_MCP_ENA/DIS		ENA	DIS				○	○
				B1	PSA_XUV_MCP_ON/OFF		1:ON	0:OFF				○	○
				B2	PSA_ESA_CAL_ON/OFF		ON	OFF				○	○
				B3	PSA_ESA_MODE_PHA/PD		PHA	PD				○	○
				B4	PSA_ISA_CAL_ON/OFF		ON	OFF				○	○
				B5	PSA_ISA_MODE_PHA/PD		PHA	PD				○	○
				B6	PSA_SUB_INDEX1		SUB_BIT0_1	SUB_BIT0_0					
				B7	PSA_SUB_INDEX2		SUB_BIT1_1	SUB_BIT1_0					

Table B-2 Bilevel Data List (38/54)

S/S NAME	APID (2nd-H)	ADRS (Hex)	WORD	Bit	SYMBOL	ITEM	STATUS 1	STATUS 0				Inv. Cond	Sub. Cond
PSA	01 (N/A)	F803	112	B0	PSA_ESA_SV_TBL		00:0	01:1				○	○
				B1	|		10:2	11:3				
				B2	PSA_ISA_SV_TBL		00:0	01:1				○	○
				B3	|		10:2	11:3				
				B4	PSA_H32_STATUS		NML	FUL				○	○
				B5	PSA_XUV_GD		ENA	DIS				○	○
				B6		SUB_INDEX1							
				B7		SUB_INDEX2							
PSA	01 (N/A)	F803	112	B0	PSA_XUV_FOV		00:0	01:1				○	○
				B1	|		10:2	11:3				
				B2	PSA_MGF_CONNECT		CON	DIS				○	○
				B3	PSA_MGF_DATA		NML	ERR				○	○
				B4	PSA_ESA_ISA_GD		ENA	DIS				○	○
				B5	PSA_ESA_ISA_PC		ENA	DIS				○	○
				B6		SUB_INDEX1							
				B7		SUB_INDEX2							
PSA	01 (N/A)	F800	109	B0								○	○
				B1								○	○
				B2	PSA_EIS_MCP_SET_LVL		0x00:0	0x01:01-10	0x02:11-20	0x03:21-30	0x04:31-40	○	○
				B3	|		0x05:41-50	0x06:51-60	0x07:61-70	0x08:71-80	0x09:81-90		
				B4	|		0x0a:91-a0	0x0b:a1-b0	0x0c:b1-c0	0x0d:c1-d0	0x0e:d1-e0		
				B5	|								
				B6										
				B7										
PSA	01 (N/A)	F801	110	B0	PSA_ACTIVATE_EN/DS		ENA	DIS				○	○
				B1	PSA_SHUTDOWN_EN/DS		ENA	DIS				○	○
				B2									
				B3									
				B4									
				B5									
				B6									
				B7	PSA_EIS_COM_SUC/FAL		SUC	FAL				○	○
PWA	01 (N/A)	8000	132	B0	PWA_ECC_2BIT_ERR	ECC 2BIT ERROR	ACT	NON				○	
				B1	PWA_ECC_1BIT_ERR	ECC 1BIT ERROR	ACT	NON				○	
				B2	PWA_ECC_ENA/DIS	ECC ENABLE/DISABLE	ENA	DIS				○	
				B3	PWA_HTR_ENA/DIS	HEATER ENABLE/DISABLE	ENA	DIS				○	
				B4	PWA_WDT_ERR	WDT ERROR	ACT	NON				○	
				B5	PWA_WDT_ENA/DIS	WDT ENABLE/DISABLE	ENA	DIS				○	
				B6	PWA_CPU_RUN/RST	CPU RUN/RESET	RUN	RST				○	
				B7	PWA_CPU_ON/OFF	CPU ON/OFF	ON	OFF				○	

Table B-2 Bilevel Data List (39/54)

S/S NAME	APID (2nd-H)	ADRS (Hex)	WORD	Bit	SYMBOL	ITEM	STATUS 1	STATUS 0				Inv. Cond	Sub. Cond
PWA	01 (N/A)	F800	133	B0									
				B1	PWA_LFA_CAL_ON/OFF	LFA CALIBRATION ON/OFF	ON	OFF				○	○
				B2	PWA_LFA_BIAS_ON/OFF	LFA WFC-D BIAS ON/OFF	ON	OFF				○	○
				B3	PWA_LFA_OFA_GAIN	LFA OFA GAIN	H	L				○	○
				B4	PWA_LFA_WFCD_GAIN	LFA WFC-D GAIN	H	L				○	○
				B5	PWA_LFA_WFCM_GAIN	LFA WFC-M GAIN	10:H	01:M	00:L	OTR:*		○	○
				B6	|							
				B7	PWA_LFA_OFA_ANT	LFA OFA ANTENNA	EX	EY				○	○
PWA	01 (N/A)	F801	134	B0									
				B1	PWA_LFA_DSP_STATUS	LFA DSP STATUS	11:R/H	10:RST	01:HLD	00:RUN		○	○
				B2	|							
				B3	PWA_LFA_WDT_ENA/DIS	LFA DSP WDT ENA/DIS	ENA	DIS				○	○
				B4	PWA_LFA_WDT_ERR/NML	LFA DSP WDT ERROR/NORMAL	ERR	NML				○	○
				B5	PWA_LFA_FIFO_FL/NML	LFA FIFO FULL/NORMAL	FUL	NML				○	○
				B6	PWA_LFA_FIFO_EM/NML	LFA FIFO EMPTY/NORMAL	EMP	NML				○	○
				B7	PWA_LFA_FIFO_HF/NML	LFA FIFO HALF/NORMAL	HF	NML				○	○
PWA	01 (N/A)	F801	134	B0									
				B1									
				B2									
				B3									
				B4									
				B5	PWA_LFA_FIFO	LFA FIFO STATUS	100:FUL	101:FUL	010:EMP	001:HF	000:NML	○	○
				B6	|	OTR:***						
				B7	|							
PWA	01 (N/A)	F802	135	B0	PWA_LFA_WFCD_CAL	LFA WFC-D CALIBRATION	ON	OFF				○	○
				B1	PWA_LFA_ADC_CLK	LFA A/D CLOCK	LFA	PWS				○	○
				B2	PWA_LFA_WFCM_STATUS	LFA WFC-M STATUS	11:REC/REP	10:REC	01:REP	00:STOP		○	○
				B3	|							
				B4									
				B5									
				B6									
				B7									
PWA	01 (N/A)	F803	136	B0	PWA_LFA_CAL_LEV_SET	LFA CALIBRATION LEVEL SET	10:0	01:-20	00:-40	OTR:***		○	○
				B1	|							
				B2	PWA_LFA_WFCD_SP/DP	LFA WFC-D SINGLE/DOUBLE PROBE	SPB	DPB				○	○
				B3	PWA_LFA_EMG	LFA EMERGENCY MODE	EMG	NML				○	○
				B4	PWA_LFA_DSP_MEM_ST	LFA DSP MEMORY STATUS	11:C/E	10:CHK	01:ERR	00:NML		○	○
				B5	|							
				B6									
				B7	PWA_LFA_WFCH_STATUS	LFA WFC-H STATUS	REC	STOP				○	○

Table B-2 Bilevel Data List (40/54)

S/S NAME	APID (2nd-H)	ADRS (Hex)	WORD	Bit	SYMBOL	ITEM	STATUS 1	STATUS 0				Inv. Cond	Sub. Cond
PWA	01 (N/A)	F804	137	B0	PWA_LFA_OBS_MODE	LFA OBSERVATION MODE	0x00:CHG_DP	0x01:CHG_SP	0x10:NMNL_DP	0x11:NMNL_SP		○	○
				B1	|		0x20:AUTO_CAL					
				B2	|		0x30:OFA_EY	0x31:OFA_EX	0x40:OFA_L	0x51:OFA_H		
				B3	|		0x50:WFCM_L	0x51:WFCM_M	0x52:WFCM_H			
				B4	|		0x60:WFCD_L	0x61:WFCD_H			○	
				B5	|		0x70:WFCD_DP	0x71:WFCD_SP			○	
				B6	|		0x81:SW_1KHZ	0x82:SW_2KHZ	0x84:SW_4KHZ	0x88:SW_8KHZ	○	
				B7	|		0x90:RESUME	0xA0:CDC_INI	OTR:UNKNOWN		○	
PWA	01 (N/A)	F806	139	B0	PWA_HTR_ON/OFF	HEATER ON/OFF (FOR POWER AMP)	ON	OFF				○	○
				B1	PWA_HTR_CONT_ON/OFF	HEATER CONTROL ON/OFF (FOR POWER ANP)	ON	OFF				○	○
				B2	PWA_PWS_RX_GAIN	PWS RX GAIN	11:H	10:M	01:L	00:*		○	○
				B3	|							
				B4	PWA_PWS_RX_ANT	PWS RX ANTENNA REVERSE/NORMAL	REV	NRM				○	○
				B5	PWA_PWS_RX_FIX/SWP	PWS RX MODE FIX/SWEEP	111:FIX	000:SWP	OTR:***			○	○
				B6	|							
				B7	|							
PWA	01 (N/A)	F809	140	B0	PWA_PWS_PAMP_H/L	PWS POWER AMP CONTROL HIGH/LOW	H	L				○	○
				B1	PWA_PWS_DCDC_ON/OFF	PWS DC/DC CONVERTER ON/OFF	ON	OFF				○	○
				B2	PWA_PWS_CB1_ON/OFF	PWS C-BANK1 ON/OFF	ON	OFF				○	○
				B3	PWA_PWS_CB2_ON/OFF	PWS C-BANK2 ON/OFF	ON	OFF				○	○
				B4	PWA_PWS_CB3_ON/OFF	PWS C-BANK3 ON/OFF	ON	OFF				○	○
				B5	PWA_PWS_CB4_ON/OFF	PWS C-BANK4 ON/OFF	ON	OFF				○	○
				B6	PWA_PWS_LOAD_ON/OFF	PWS POWER AMP LOAD ON/OFF	ON	OFF				○	○
				B7	PWA_PWS_CENT_ON/OFF	PWS POWER AMP CENTER ON/OFF	ON	OFF				○	○
PWA	01 (N/A)	F807	141	B0	PWA_PWS_CAL13	WPRE1-3 CAL SIGNAL ON/OFF	ON	OFF				○	○
				B1	PWA_PWS_CAL24	WPRE2-4 CAL SIGNAL ON/OFF	ON	OFF				○	○
				B2	PWA_PWS_GCAL_ON/OFF	PWS GROUND CAL ON/OFF	ON	OFF				○	○
				B3	PWA_PWS_LCAL_ON/OFF	PWS LEVEL CAL ON/OFF	ON	OFF				○	○
				B4	PWA_PWS_PCAL_ON/OFF	PWS PHASE CAL ON/OFF	ON	OFF				○	○
				B5	PWA_PWS_SCAL_ON/OFF	PWS SPW CAL ON/OFF	ON	OFF				○	○
				B6	PWA_PWS_NCAL_ON/OFF	PWS NEI CAL ON/OFF	ON	OFF				○	○
				B7	PWA_PWS_ACAL_ON/OFF	PWS ALT CAL ON/OFF	ON	OFF				○	○
PWA	01 (N/A)	F807	141	B0	PWA_PWS_CAL/OBS		0x00:OBS	OTR:CAL				○	○
				B1	|							
				B2	|							
				B3	|							
				B4	|							
				B5	|							
				B6	|							
				B7	|							

Table B-2 Bilevel Data List (41/54)

S/S NAME	APID (2nd-H)	ADRS (Hex)	WORD	Bit	SYMBOL	ITEM	STATUS 1	STATUS 0				Inv. Cond	Sub. Cond
PWA	01 (N/A)	F807	142	B0	PWA_PWS_FIFO	PWS FIFO STATUS	110:FL	010:HF	001:EM	000:NRM	OTR:***	○	○
				B1	|							
				B2	|							
				B3	PWA_PWS_DET_BND	PWS DETECTOR BAND WIDE/NARROW	WID	NRW				○	○
				B4	PWA_PWS_FIL_BND	PWS FILTER BAND WIDE/NARROW	WID	NRW				○	○
				B5	PWA_PWS_RF_DIV	PWS RF DIVIDER ON/OFF	ON	OFF				○	○
				B6	PWA_PWS_NEI_SIG	PWS NEI SIGNAL ON/OFF	ON	OFF				○	○
				B7	PWA_PWS_POL_SIG	PWS PL SIGNAL ON/OFF	ON	OFF				○	○
PWA	01 (N/A)	F80A	143	B0									
				B1	PWA_PWS_TXL_PWR	PWS TX/CAL POWER ON/OFF	ON	OFF				○	○
				B2	PWA_PWS_NEI_PWR	PWS NEI POWER ON/OFF	ON	OFF				○	○
				B3	PWA_PWS_W4_NEI	WPRE4 NEI SIGNAL ON/OFF	ON	OFF				○	○
				B4	PWA_PWS_W4_SPW	WPRE4 SPW SIGNAL ON/OFF	ON	OFF				○	○
				B5	PWA_PWS_W3_SPW	WPRE3 SPW SIGNAL ON/OFF	ON	OFF				○	○
				B6	PWA_PWS_W2_SPW	WPRE2 SPW SIGNAL ON/OFF	ON	OFF				○	○
				B7	PWA_PWS_W1_SPW	WPRE1 SPW SIGNAL ON/OFF	ON	OFF				○	○
PWA	01 (N/A)	F807	142	B0	PWA_PWS_MENU_GRP	PWS MENU GROUP	0x0:NPW	0x8:SPW	0xA:SPWT	0xC:SEQ	0xOE:CAL	○	○
				B1	|		0xF:ETC	OTR:****				
				B2	|							
				B3	|							
				B4	PWA_PWS_MENU_N	PWS MENU NUMBER	0x0:0	0x1:1	0x2:2	0x3:3		○	○
				B5	|		0x4:4	0x5:5	0x6:6	0x7:7			
				B6	|		0x8:8	0x9:9	0xA:10	0xB:11			
				B7	|		0xC:12	0xD:13	0xE:14	0xF:15			
PWA	01 (N/A)	F807	142	B0									
				B1									
				B2									
				B3									
				B4	PWA_PWS_MENU_N_CAL	PWS MENU NUMBER (ETC MODE)	0x0:ALL					○	○
				B5	|		0x8:GCAL	0x9:LCAL	0xA:PCAL	0xB:NCAL			
				B6	|		0xC:SCAL	0xD:ACAL					
				B7	|		OTR:****						
PWA	01 (N/A)	F807	142	B0									
				B1									
				B2									
				B3									
				B4	PWA_PWS_MENU_N_ETC	PWS MENU NUMBER (ETC MODE)	0x0:IDLE	0x8:MANU	0xF:OFF	OTR:****		○	○
				B5	|							
				B6	|							
				B7	|							

Table B-2 Bilevel Data List (42/54)

S/S NAME	APID (2nd-H)	ADRS (Hex)	WORD	Bit	SYMBOL	ITEM	STATUS 1	STATUS 0				Inv. Cond	Sub. Cond
PWA	01 (N/A)	F80A	143	B0	PWA_PWS_MODE_GRP	PWS MODE GROUP	0x0:DS	0x1:PL	0x2:NEI			○	○
				B1	|		0x8:SPWN	0x9:SPWH	0xA:ALT	0xF:IDLE	OTR:****		
				B2	|								
				B3	|								
				B4	PWA_PWS_MODE_N	PWS MODE NUMBER	0x0:0	0x1:1	0x2:2	0x3:3		○	○
				B5	|		0x4:4	0x5:5	0x6:6	0x7:7			
				B6	|		0x8:8	0x9:9	0xA:10	0xB:11			
				B7	|		0xC:12	0xD:13	0xE:14	0xF:15			
PWA	01 (N/A)	F80A	143	B0	PWA_PWS_MODE_G1	PWS MODE GROUP(B0)	SPW	NPW				○	○
				B1	PWA_PWS_MODE_G2	PWS MODE GROUP(B1-B2)	11:IDLE	OTR:SPW				○	○
				B2	|								
				B3										
				B4	PWA_PWS_MODE_N_EDIT	PWS MODE NUMBER (EDIT MODE)	0x0:E25	0x4:E150	0xC:E25T	OTR:****		○	○
				B5	|		0x1:E50	0x5:E200	0xD:E50T				
				B6	|		0x2:E75	0x6:E250	0xE:E_NT				
				B7	|		0x3:E100						
PWA	01 (N/A)	F80B	144	B0										
				B1	PWA_WNT_PRE_ON/OFF	WANT PRE AMP ON/OFF	ON	OFF				○	○
				B2	PWA_PAC_FRM	PWA PACKET FORMAT	00:NULL	01:PWS	10:LFA	11:WFCM		○	○
				B3	|								
				B4	PWA_PWS_PAMP_ON/OFF	PWS POWER AMP ON/OFF	ON	OFF				○	○
				B5	PWA_PWS_TX_ANT	PWS TX ANTENNA REVERSE/NORMAL	REV	NRM				○	○
				B6	PWA_EDIT_NO	HK EDIT NUMBER	00:0	01:1	10:2	11:*		○	○
				B7	|								
PWA	01 (N/A)	F80C	145	B0	PWA_WNT_STBY_ON/OFF	WANT STANDBY ON/OFF	ON	OFF				○	
				B1	PWA_WNT_ANT_EXT/RET	WANT ANTENNA EXTENSION/RETRACTION	EXT	RET				○	
				B2	PWA_WNT_MONI_ON/OFF	WANT MONITOR ON/OFF	ON	OFF				○	
				B3	PWA_WNT_LIM_ENA/DIS	WANT HARD-LIMITER ENABLE/DISABLE	ENA	DIS				○	
				B4	PWA_WNT1_SEL_ON/OFF	WANT1 SELECT ON/OFF	ON	OFF				○	
				B5	PWA_WNT2_SEL_ON/OFF	WANT2 SELECT ON/OFF	ON	OFF				○	
				B6	PWA_WNT3_SEL_ON/OFF	WANT3 SELECT ON/OFF	ON	OFF				○	
				B7	PWA_WNT4_SEL_ON/OFF	WANT4 SELECT ON/OFF	ON	OFF				○	
PWA	01 (N/A)	F80D	146	B0	PWA_WNT1_EXT_FL/NOT	WANT1 FULL/NOT-FULL EXTENSION	FUL	NOT				○	
				B1	PWA_WNT1_RET_FL/NOT	WANT1 FULL/NOT-FULL RETRACTION	FUL	NOT				○	
				B2	PWA_WNT2_EXT_FL/NOT	WANT2 FULL/NOT-FULL EXTENSION	FUL	NOT				○	
				B3	PWA_WNT2_RET_FL/NOT	WANT2 FULL/NOT-FULL RETRACTION	FUL	NOT				○	
				B4	PWA_WNT3_EXT_FL/NOT	WANT3 FULL/NOT-FULL EXTENSION	FUL	NOT				○	
				B5	PWA_WNT3_RET_FL/NOT	WANT3 FULL/NOT-FULL RETRACTION	FUL	NOT				○	
				B6	PWA_WNT4_EXT_FL/NOT	WANT4 FULL/NOT-FULL EXTENSION	FUL	NOT				○	
				B7	PWA_WNT4_RET_FL/NOT	WANT4 FULL/NOT-FULL RETRACTION	FUL	NOT				○	

Table B-2 Bilevel Data List (43/54)

S/S NAME	APID (2nd-H)	ADRS (Hex)	WORD	Bit	SYMBOL	ITEM	STATUS 1	STATUS 0				Inv. Cond	Sub. Cond
PWA	01 (N/A)	F80E	147	B0	PWA_WNT_DRV_ON/OFF	WANT DRIVE ON/OFF	ON	OFF				○	
				B1	PWA_WNT_PRG_ENA/DIS	WANT PROGRAM ENABLE/DISABLE	ENA	DIS				○	
				B2	PWA_PWS_ON/OFF	PWS POWER ON/OFF	ON	OFF				○	
				B3	PWA_LFA_ON/OFF	LFA POWER ON/OFF	ON	OFF				○	
				B4	PWA_UVC_L1_ON/OFF	UVC LEVEL1 ON/OFF	ON	OFF				○	
				B5	PWA_PROG_OBS/WNT	PROGRAM OBS/WANT	OBS	WNT				○	
				B6	PWA_EDIT_OBS/WNT	HK EDIT OBS/WANT	OBS	WNT				○	
				B7	PWA_OTC_ON/OFF	OTC(OVER TEMP CONTROL) ON/OFF	ON	OFF				○	
				B0									
				B1									
				B2									
				B3									
				B4									
				B5									
				B6									
				B7									
PWA	12 (N/A)		5	B0	PWA_PAC_PROG	PROGRAM OBS/WANT(PWA PAC)	OBS	WNT				○	
				B1	PWA_TI_CHECK	TI VALIDITY CHECK	INVALID	VALID				○	
				B2									
				B3									
				B4	PWA_PAC_FRM/O	PACKET FORMAT(EXTENDED)	0000:NULL	0001:PWS	0010:LFA	0011:WFCM	1111:NMI	○	
				B5	|		OTR:****					
				B6	|							
				B7	|							
PWA	12 (N/A)		11	B0	PWA_PAC_TLM_FRM	TELEMETRY FORMAT(PWA PAC)	0x00:OBSP	0x01:OBSS	0x02:AOCS	0x03:UVSV	0x04:MIC	○	
				B1	|		0x03:UVSV	0x04:MIC	0x05:WFCM	0x06:MDC	OTR:****	
				B2	|							
				B3	|							
				B4	PWA_PAC_EDIT_RATE	EDIT RATE(PWA PAC)	0x0D:64K	0x0C:32K	0x0B:16K	0x0A:8K	0x09:4K	○	
				B5	|		0x08:2K	0x07:1K	0x06:512	0x05:256	0x04:128	
				B6	|		0x03:64	OTR:***				
				B7	|							
PWA	12 (07:00)		28	B0	PWA_LFA_WFCM_CDC	LFA WFC-M CODEC ON/OFF	ON	OFF				○	
				B1	PWA_LFA_WFCD_CDC	LFA WFC-D CODEC ON/OFF	ON	OFF				○	
				B2	PWA_LFA_WFCD_FLT	LFA WFC-D FILTER AVERAGE/LOWPASS	AVR	LPF				○	
				B3	PWA_LFA_WFCD_FLT_E	LFA WFC-D FILTER EMRGNCY	AVR	LPF				○	
				B4	PWA_LFA_SW_FREQ	LFA SW FREQUENCY	1000:8KHZ					○	
				B5	|		0100:4KHZ					
				B6	|		0010:2KHZ					
				B7	|		0001:1KHZ	OTR:****				

Table B-2 Bilevel Data List (44/54)

S/S NAME	APID (2nd-H)	ADRS (Hex)	WORD	Bit	SYMBOL	ITEM	STATUS 1	STATUS 0				Inv. Cond	Sub. Cond
PWA	12 (07:01)		28	B0	PWA_LFA_OFA_OVR	LFA OFA OVER FLAG	OVER	----				○	
				B1	PWA_LFA_OFA_AGC	LFA OFA AGC ON/OFF	AGC	MAN				○	
				B2									
				B3									
				B4									
				B5									
				B6									
				B7									
PWA	12 (07:02)		28	B0	PWA_LFA_WFCM_ML_OVR	LFA WFC-M ML OVER FLAG	OVER	----				○	
				B1	PWA_LFA_WFCM_ML_AGC	LFA WFC-M ML AGC ON/OFF	AGC	MAN				○	
				B2									
				B3									
				B4									
				B5									
				B6									
				B7									
PWA	12 (07:06)		28	B0	PWA_LFA_WFCM_HM_OVR	LFA WFC-M HM OVER FLAG	OVER	----				○	
				B1	PWA_LFA_WFCM_HM_AGC	LFA WFC-M HM AGC ON/OFF	AGC	MAN				○	
				B2									
				B3									
				B4									
				B5									
				B6									
				B7									
PWA	12 (07:03)		28	B0	PWA_LFA_WFCD_OVR	LFA WFC-D OVER FLAG	OVER	----				○	
				B1	PWA_LFA_WFCD_AGC	LFA WFC-D AGC ON/OFF	AGC	MAN				○	
				B2									
				B3									
				B4									
				B5									
				B6									
				B7									
PWA	12 (01:00)		29	B0	PWA_LFA_OFAH_T_FMT	LFA OFA-H TIME MODE FORMAT	10:PEK	01:AVR				○	
				B1	|		00:NML	OTR:***					
				B2	PWA_LFA_OFAH_T_MOD	LFA OFA-H TIME MODE	11:3	10:2				○	
				B3	|		01:1	00:0					
				B4	PWA_LFA_OFAH_F_FMT	LFA OFA-H FREQUENCY MODE FORMAT	10:PEK	01:AVR				○	
				B5	|		00:NML	OTR:***					
				B6	PWA_LFA_OFAH_F_MOD	LFA OFA-H FREQUENCY MODE	01:1	00:0				○	
				B7	|		OTR:*						

Table B-2 Bilevel Data List (45/54)

S/S NAME	APID (2nd-H)	ADRS (Hex)	WORD	Bit	SYMBOL	ITEM	STATUS 1	STATUS 0				Inv. Cond	Sub. Cond
PWA	12 (01:01)		29	B0	PWA_LFA_OFAM_T_FMT	LFA OFA-M TIME MODE FORMAT	10:PEK	01:AVR				○	
				B1	|		00:NML	OTR:***				
				B2	PWA_LFA_OFAM_T_MOD	LFA OFA-M TIME MODE	11:*	10:2				○	
				B3	|		01:1	00:0				
				B4	PWA_LFA_OFAM_F_FMT	LFA OFA-M FREQUENCY MODE FORMAT	10:PEK	01:AVR				○	
				B5	|		00:NML	OTR:***				
				B6	PWA_LFA_OFAM_F_MOD	LFA OFA-M FREQUENCY MODE	01:1	00:0				○	
				B7	|		OTR:*					○	
PWA	12 (07:00)		33	B0									
				B1									
				B2									
				B3									
				B4	PWA_LFA_MEM_BANK	LFA MEMORY BANK ENA/DIS	ENA	DIS				○	
				B5	PWA_LFA_MEM_BANK_ST	LFA MEMORY BANK STATUS	11:FUL	10:HF				○	
				B6	|		01:NML	00:EMP				○	
				B7	PWA_LFA_MEM_BANK_CK	LFA MEMORY BANK CHECK	ERR	NML				○	
PWA	12 (N/A)		34	B0	PWA_LFA_FIFO_DF/N	LFA FIFO FULL/NORMAL(DATA)	FUL	NML				○	
				B1	PWA_LFA_FIFO_DH/N	LFA FIFO HALF/NORMAL(DATA)	HALF	NML				○	
				B2	PWA_LFA_OFA_DGAIN	LFA OFA GAIN(DATA)	H	L				○	
				B3	PWA_LFA_WFCD_DGAIN	LFA WFC-D GAIN(DATA)	H	L				○	
				B4	PWA_LFA_WFCM_DGAIN	LFA WFC-M GAIN(DATA)	10:H	01:M	00:L	OTR:*		○	
				B5	|							
				B6	PWA_LFA_OFA_H_TOP	LFA OFA-H TOP PACKET	TOP	MID				○	
				B7	PWA_LFA_OFA_M_TOP	LFA OFA-M TOP PACKET	TOP	MID				○	
PWA	12 (07:06)		432	B0									
				B1									
				B2	PWA_PWS_MODE/I	PWS OBS MODE(INSTRUMENTAL)	0x00:DS	OTR:******				○	
				B3	|		0x10:PL						
				B4	|		0x20:NEI						
				B5	|		0x30:SPWN/N	0x31:SPWN/M	0x32:SPWN/F				
				B6	|		0x34:SPWH/N	0x35:SPWH/M	0x36:SPWH/F			○	
				B7	|		0x38:ALT						
PWA	12		38	B0	PWA_WNT_F11	WANT1 SELECT ON/OFF FLAG	0xFF:ON	0x00:OFF				○	
				B1	|								
				B2	|								
				B3	|								
				B4	|								
				B5	|								
				B6	|								
				B7	|								

Table B-2 Bilevel Data List (46/54)

S/S NAME	APID (2nd-H)	ADRS (Hex)	WORD	Bit	SYMBOL	ITEM	STATUS 1	STATUS 0				Inv. Cond	Sub. Cond
PWA	12		39	B0	PWA_WNT_F12	WANT2 SELECT ON/OFF FLAG	0xFF:ON	0x00:OFF				○	
				B1	|							
				B2	|							
				B3	|							
				B4	|							
				B5	|							
				B6	|							
				B7	|							
PWA	12		40	B0	PWA_WNT_F13	WANT3 SELECT ON/OFF FLAG	0xFF:ON	0x00:OFF				○	
				B1	|							
				B2	|							
				B3	|							
				B4	|							
				B5	|							
				B6	|							
				B7	|							
PWA	12		41	B0	PWA_WNT_F14	WANT4 SELECT ON/OFF FLAG	0xFF:ON	0x00:OFF				○	
				B1	|							
				B2	|							
				B3	|							
				B4	|							
				B5	|							
				B6	|							
				B7	|							
PWA	12		43	B0	PWA_WNT_F20	ALL SELECT OFF FLAG	0xFF:ON	0x00:OFF				○	
				B1	|							
				B2	|							
				B3	|							
				B4	|							
				B5	|							
				B6	|							
				B7	|							
				B0									
				B1									
				B2									
				B3									
				B4									
				B5									
				B6									
				B7									

Table B-2 Bilevel Data List (47/54)

S/S NAME	APID (2nd-H)	ADRS (Hex)	WORD	Bit	SYMBOL	ITEM	STATUS 1	STATUS 0				Inv. Cond	Sub. Cond
MPM	01	8000	122	B0	MPM_ECC_2_BIT_ERR	ECC_2_BIT_ERROR	ACT	NON				○	
				B1	MPM_ECC_1_BIT_ERR	ECC_1_BIT_ERROR	ACT	NON				○	
				B2	MPM_ECC_EN/DS	ECC_ENABLE/DISABLE	ENA	DIS				○	
				B3	MPM_HTR_EN/DS	HTR_ENABLE/DISABLE	ENA	DIS				○	
				B4	MPM_WDT_ERR	WDT_ERROR	ACT	NON				○	
				B5	MPM_WDT_EN/DS	WDT_ENABLE/DISABLE	ENA	DIS				○	
				B6	MPM_CPU_RUN	CPU_RUN	RUN	RST				○	
				B7	MPM_CPU_ON/OFF	CPU_ON/OFF	ON	OFF				○	
MPM	01	F800	123	B0	MPM_MGF/PET	MGF/PET_ON/OFF	ON	OFF				○	○
				B1	MPM_MGF_SENSE	MGF_SENSE_REVERSE/NORMAL	REV	NOR				○	○
				B2	MPM_MGF_RANGE	MGF_RANGE_BC/AUTO	BC	AUTO				○	○
				B3	MPM_PET_CAL	PET_CALIBRATION_ON/OFF	ON	OFF				○	○
				B4	MPM_PET_SWEEP	PET_SWEEP_ON/OFF	ON	OFF				○	○
				B5	MPM_MST_HTR_ON/OFF	MST_HEATER_ON/OFF	ON	OFF				○	○
				B6	MPM_MGF_RNG	MGF_RANGE	00:0	01:1	10:2	11:3		○	○
				B7	|							
MPM	01	F800	123	B0									
				B1	MPM_PET_EDIT_MODE	PET_EDITION_MODE	000:00	001:01	010:02	011:03		○	○
				B2	|		100:04	101:*	110:*	111:*			
				B3	|							
				B4	MPM_UVS_BOS_LVL_B7	UVS_BOS_LEVEL_LSB	1:1	0:0				○	○
				B5	MPM_UVS_G_DISC_LVL	UVS_G_DISC_LEVEL	00:0	01:1	10:2	11:3		○	○
				B6	|							
				B7	MPM_UVS_PM_DISC_LVL	UVS_PM_DISC_LEVEL	1:1	0:0				○	○
	01		123	B0	_MST_STP_MTR_TMP	MST_STOP_MOTOR_TEMPERATURE_SET(HEX)	(Analg data)					○	○
				B1	|	MST_STOP_MOTOR_TEMPERATURE_SET(HEX)								
				B2	|	MST_STOP_MOTOR_TEMPERATURE_SET(HEX)								
				B3	|	MST_STOP_MOTOR_TEMPERATURE_SET(HEX)								
				B4	|	MST_STOP_MOTOR_TEMPERATURE_SET(HEX)								
				B5	|	MST_STOP_MOTOR_TEMPERATURE_SET(HEX)								
				B6	|	MST_STOP_MOTOR_TEMPERATURE_SET(HEX)								
				B7	|	MST_STOP_MOTOR_TEMPERATURE_SET(HEX)								
MPM	01	F801	124	B0	MPM_UVS_ON/OFF	UVS_ON/OFF	ON	OFF				○	○
				B1	MPM_UVS_G_HV_EN/DS	UVS_G_HV_ENABEL/DSABLE	ENA	DIS				○	○
				B2	MPM_UVS_G_HV_ON/OF	UVS_G_HV_ON/OF	ON	OFF				○	○
				B3	MPM_UVS_PM_HV_EN/DS	UVS_PM_HV_ENABEL/DSABLE	ENA	DIS				○	○
				B4	MPM_UVS_PM_HV_ON/OF	UVS_PM_HV_ON/OF	ON	OFF				○	○
				B5	MPM_UVS_PM_H_FIL	UVS_PM_H_FILAMENT_ON/OFF	ON	OFF				○	○
				B6	MPM_UVS_PM_D_FIL	UVS_PM_D_FILAMENT_ON/OFF	ON	OFF				○	○
				B7									

Table B-2 Bilevel Data List (48/54)

S/S NAME	APID (2nd-H)	ADRS (Hex)	WORD	Bit	SYMBOL	ITEM	STATUS 1	STATUS 0				Inv. Cond	Sub. Cond
	01		124	B0	_UVS_BOS_LEVEL	UVS_BOS_LEVEL	(Analg data)					○	○
				B1	|	UVS_BOS_LEVEL								
				B2	|	UVS_BOS_LEVEL								
				B3	|	UVS_BOS_LEVEL								
				B4	|	UVS_BOS_LEVEL								
				B5	|	UVS_BOS_LEVEL								
				B6	|	UVS_BOS_LEVEL								
				B7											
	01		124	B0											
				B1	_MST_REEL_COUNT	MST_REEL_COUNT	(Analg data)								
				B2	|	MST_REEL_COUNT							○	○
				B3	|	MST_REEL_COUNT								
				B4	|	MST_REEL_COUNT								
				B5	|	MST_REEL_COUNT								
				B6	|	MST_REEL_COUNT								
				B7											
MPM	01	F802	125	B0											
				B1	MPM_UVS_BOS_EN/DS	UVS_BOS_ENABEL/DSABLE	ENA	DIS							
				B2										○	○
				B3											
				B4											
				B5											
				B6											
				B7											
	01		125	B0											
				B1											
				B2											
				B3	_UVS_G_HV_LEVEL	UVS_G_HV_LEVEL	(Analg data)								
				B4	|	UVS_G_HV_LEVEL							○	○
				B5	|	UVS_G_HV_LEVEL								
				B6	|	UVS_G_HV_LEVEL								
				B7	|	UVS_G_HV_LEVEL								
	01		125	B0											
				B1											
				B2											
				B3	_UVS_PM_HV_LEVEL	UVS_PM_HV_LEVEL	(Analg data)								
				B4	|	UVS_PM_HV_LEVEL							○	○
				B5	|	UVS_PM_HV_LEVEL								
				B6	|	UVS_PM_HV_LEVEL								
				B7	|	UVS_PM_HV_LEVEL								

Table B-2 Bilevel Data List (49/54)

S/S NAME	APID (2nd-H)	ADRS (Hex)	WORD	Bit	SYMBOL	ITEM	STATUS 1	STATUS 0				Inv. Cond	Sub. Cond
MPM	01	F802	125	B0	MPM_MST_STBY	MST_STANDBY_ON/OFF	ON	OFF				○	
				B1	MPM_MST_TENTION	MST_TENTION_ON/OFF	ON	OFF				○	○
				B2									
				B3	MPM_MST_RETRACT_FUL	MST_RETRACT_FULL/NOT_FULL	FULL	NOT_FULL				○	○
				B4	MPM_MST_REEL_CNT_D6	MST_REEL_COUNT_D6	1	0				○	○
				B5	MPM_MST_DRIVE	MST_DRIVE_ON/OFF	ON	OFF				○	○
				B6	MPM_MST_EXT/RET	MST_RETRACT	00:NON	01:EXT	10:RET	11:*		○	○
				B7	|	MST_EXTRACT						○	○
MPM	01	F802	125	B0									
				B1	MPM_MST_HTR_CNT	MST_HEATER_CONTROL_AUTO/MANUAL	AUTO	MAN				○	○
				B2									
				B3	MPM_MST_S_M_CUR_DO	MST_STOP_MOTOR_CURRENT_SET_DO	1	0				○	○
				B4	MPM_MST_OVLD	MST_OVERLOAD	OVLD	NON				○	○
				B5									
				B6	MPM_MST_TNT_MONITOR	MST_TENTION_MONITOR	00:ON	01:ON_OFF	10:ON_OFF_ON	11:*		○	○
				B7	|							
MPM	01	F803	126	B0	MPM_UVS_LIS_GAIN	UVS_LIS_GAIN	00:L/0	01:ML/1	10:MH/2	11:H/3		○	○
				B1	|							
				B2	MPM_UVS_OBS_MODE	UVS_OBSERVATION_MODE	00:0/DUST	01:1/CRN	10:2/D-GLOW	11:3/OVALL		○	○
				B3	|							
				B4	MPM_UVS_CONTROL	UVS_CONTROL_MANUAL/AUTO	MAN	AUTO				○	○
				B5	MPM_UVS_OBS_SUB_MOD	UVS_OBSERVATION_SUB_MODE	000:0/NON	001:1/H-DOP	010:2/D-DOP	011:3/H-FIX		○	○
				B6	|		100:4/D-FIX	101:5/H-SWP	110:6/D-SWP	111:7/D-H			
				B7	|							
MPM	01	F803	126	B0	MPM_UVS_H_FIL_TEMP	UVS_H_FILAMENT_TEMPERATURE	00:L/0	01:ML/1	10:MH/2	11:H/3		○	○
				B1	|							
				B2	MPM_UVS_D_FIL_TEMP	UVS_D_FILAMENT_TEMPERATURE	00:L/0	01:ML/1	10:MH/2	11:H/3		○	○
				B3	|							
				B4	MPM_UVS_H_FIL_SEL	UVS_H_FILAMENT_SELECT	00:0	01:1	10:2	11:3		○	○
				B5	|							
				B6	MPM_UVS_D_FIL_SEL	UVS_D_FILAMENT_SELECT	00:0	01:1	10:2	11:3		○	○
				B7	|							
MPM	01	F803	126	B0	MPM_MST_CUR_STP_MON		ACT	NON				○	○
				B1	MPM_MST_CUR_STP		ENA	DIS				○	○
				B2	MPM_MST_TEMP_STP	MST_OVERLOAD	ENA	DIS				○	○
				B3	MPM_MST_REL_CNT_STP	MST_REEL_COUNT_STOP_ENABLE/DISABLE	ENA	DIS				○	○
				B4	MPM_MST_TNT_ON_STP	MST_TENTION_ON_STOP_ENABLE/DISABLE	ENA	DIS				○	○
				B5	MPM_MST_TNT_OFF_STP	MST_TENTION_OFF_STOP_ENABLE/DISABLE	ENA	DIS				○	○
				B6	MPM_MST_RET_FUL_STP	MST_RETRACT_FULL_STOP_ENABLE/DISABLE	ENA	DIS				○	○
				B7	MPM_MST_RET_NFL_STP	MST_RETRACT_NOT_FULL_STOP_ENABLE/DISABLE	ENA	DIS				○	○

Table B-2 Bilevel Data List (50/54)

S/S NAME	APID (2nd-H)	ADRS (Hex)	WORD	Bit	SYMBOL	ITEM	STATUS 1	STATUS 0				Inv. Cond	Sub. Cond
	01		126	B0	_MST_STP_RC_SET	MST_STOP_REEL_COUNT_SET	(Analg data)					○	○
				B1	|	MST_STOP_REEL_COUNT_SET							
				B2	|	MST_STOP_REEL_COUNT_SET							
				B3	|	MST_STOP_REEL_COUNT_SET							
				B4	|	MST_STOP_REEL_COUNT_SET							
				B5	|	MST_STOP_REEL_COUNT_SET							
				B6	|	MST_STOP_REEL_COUNT_SET							
				B7	|	MST_STOP_REEL_COUNT_SET							
MIC	01 (N/A)	8000	113	B0	MIC_ECC_2B_ERR_FLG	ECC 2BITS ERROR	ERR	NON				○	
				B1	MIC_ECC_1B_ERR_FLG	ECC 1BITS ERROR	ERR	NON				○	
				B2	MIC_ECC_EN/DS	ECC ENABLE/DISABLE	ENA	DIS				○	
				B3	MIC_HTR_EN/DS	HEATER CONTROL ENABLE/DISABLE	ENA	DIS				○	
				B4	MIC_WDT_OVF_FLG	WDT OVERFLOW ERROR	ERR	NON				○	
				B5	MIC_WDT_EN/DS	WDT ENABLE/DISABLE	ENA	DIS				○	
				B6	MIC_CPU_RUN/RST	CPU RUN/RESET	RUN	RST				○	
				B7	MIC_CPU_ON/OF	CPU ON/OFF	ON	OFF				○	
MIC	01 (N/A)	F800	114	B0	MIC_MEM_EMP_FLG	IMAGE BUFFER EMPTY	EMPTY	EXIST				○	
				B1	MIC_CCD_DRV_ON/OF	CCD DRIVE ON/OFF	ON	OFF				○	
				B2	MIC_READ_POINT_E-FG	READ POINTER OPERATION ERROR	ERR	NON				○	
				B3	MIC_COMPRESS_E-FG	COMPRESS POINTER OPERATION ERROR	ERR	NON				○	
				B4	MIC_OVER_WRITE_E-FG	IMAGE BUFFER OVER WRITE	ERR	NON				○	
				B5	MIC_CMD_ERR_FLG	COMMAND ERROR	ERR	NON				○	
				B6	MIC_SOFTWARE_MODE	SOFTWARE MODE/MANUAL MODE	SOFT	MANU				○	
				B7	MIC_CCD_ON/OF	CCD ON/OFF	ON	OFF				○	
MIC	01 (N/A)	F801	115	B0	MIC_COLOR	COLOR	00:RED	01:GREEN	10:BLUE	11:ERR		○	
				B1	|							
				B2	MIC_THRESHOLD	BILEVEL IAMGE THRESHOLD LEVEL	00:LEVEL_0	01:LEVEL_1	10:LEVEL_2	11:LEVEL_3		○	
				B3	|							
				B4	MIC_GAIN	AMP GAIN LEVEL	00:GAIN_0	01:GAIN_1	10:GAIN_2	11:GAIN_3		○	
				B5	|							
				B6	MIC_MODE	OPERATION MODE	00:AUTO	01:COMMAND	10:ONESHOT	11:ERR		○	
				B7	|							
MIC	13 (10)	FA01	5	B0	MIC_ECC_2B_ERR_SP	ECC 2BITS ERROR	ERR	NON				○	
				B1	MIC_ECC_1B_ERR_SP	ECC 1BITS ERROR	ERR	NON				○	
				B2	MIC_ECC_EN/DS_SP	ECC ENABLE/DISABLE	ENA	DIS				○	
				B3	MIC_HTR_EN/DS_SP	HEATER CONTROL ENABLE/DISABLE	ENA	DIS				○	
				B4	MIC_WDT_OVF_SP	WDT OVERFLOW ERROR	ERR	NON				○	
				B5	MIC_WDT_EN/DS_SP	WDT ENABLE/DISABLE	ENA	DIS				○	
				B6	MIC_CPU_RUN/RST_SP	CPU RUN/RESET	RUN	RST				○	
				B7	MIC_CPU_ON/OF_SP	CPU ON/OFF	ON	OFF				○	

Table B-2 Bilevel Data List (51/54)

S/S NAME	APID (2nd-H)	ADRS (Hex)	WORD	Bit	SYMBOL	ITEM	STATUS 1	STATUS 0				Inv. Cond	Sub. Cond
MIC	13 (10)	FA03	7	B0	MIC_COLOR_SP	COLOR	00:RED	01:GREEN	10:BLUE	11:ERR		○	
				B1	|							
				B2	MIC_THRESHOLD_SP	BILEVEL IAMGE THRESHOLD LEVEL	00:LEVEL_0	01:LEVEL_1	10:LEVEL_2	11:LEVEL_3		○	
				B3	|							
				B4	MIC_GAIN_SP	AMP GAIN LEVEL	00:GAIN_0	01:GAIN_1	10:GAIN_2	11:GAIN_3		○	
				B5	|							
				B6	MIC_MODE_SP	OPERATION MODE	00:AUTO	01:COMMAND	10:ONESHOT	11:ERR		○	
				B7	|							
MIC	13 (10)	FA07	11	B0	MIC_OPERATION_MODE	OPERATION STATUS	TAKE					○	
				B1	|		SEARCH					○	
				B2	|		WAIT_IP					○	
				B3		OPERATION MODE	ERR					○	
				B4			ONESHOT					○	
				B5			CMD					○	
				B6			AUTO					○	
				B7			CCD_ON					○	
MIC	13 (10)	FA10	20	B0	MIC_ICM_C/P_EOP	ICM EOP	1:1	0:0				○	
				B1	MIC_ICM_C/P_COF-RST	ICM RESET	RST	NON				○	
				B2	MIC_ICM_C/P_ENA2	ICM ENA2	1:1	0:0				○	
				B3	MIC_ICM_C/P_SI	ICM SI	1:0	0:1				○	
				B4	MIC_ICM_C/P_SL	ICM SL	1:0	0:1				○	
				B5	MIC_ICM_C/P_TB	ICM TB	1:1	0:0				○	
				B6	MIC_ICM_C/P_DAT	ICM DAT	1:0	0:1				○	
				B7	MIC_ICM_C/P_PWD	ICM PWD	UP	DOWN				○	
MIC	13 (10)	FA11	21	B0								○	
				B1	MIC_ICM_C/P_CRAT	ICM CRAT	ERR	NON				○	
				B2	MIC_ICM_C/P_MAT	ICM MAT	ON	OFF				○	
				B3	MIC_ICM_C/P_PRET	ICM PRET	ON	OFF				○	
				B4	MIC_ICM_C/P_SSI	ICM SSI	OFF	ON				○	
				B5	MIC_ICM_C/P_EF1	ICM EF1	ON	OFF				○	
				B6	MIC_ICM_C/P_FF0	ICM FF0	OFF	ON				○	
				B7	MIC_ICM_C/P_EF0	ICM EF0	OFF	ON				○	
MIC	13 (10)	FA12	22	B0	MIC_COF0_SCAL_FACTR	ICM SCALE FACTOR INDEX	SF3					○	
				B1	|		SF2					○	
				B2	|		SF1					○	
				B3	|		SF0					○	
				B4								○	
				B5								○	
				B6	MIC_COF0_C/R_NLS	ICM NLS	1:1	0:0				○	
				B7	MIC_COF0_C/R_MALGO	ICM MALGO	1:1	0:0				○	

Table B-2 Bilevel Data List (52/54)

S/S NAME	APID (2nd-H)	ADRS (Hex)	WORD	Bit	SYMBOL	ITEM	STATUS 1	STATUS 0				Inv. Cond	Sub. Cond
IMI	01	800B	95	B0									
				B1									
				B2	IMI_PIM_SW	Power to PIM (0:On/1:Off)	OFF	ON					
				B3									
				B4									
				B5									
				B6									
				B7									
IMI	01	F800	119	B0	IMI_CPU_POWER	CPU power (1:On/0:Off)	ON	OFF				○	
				B1	IMI_SIM_SPIN	Simulated spin (1:On/0:Off)	ON	OFF				○	
				B2	IMI_REASON_RESET	Reason for reset	00:NORMAL_ON		01:WATCH_DOG			○	
				B3	|		10:MACH_ERROR		11:S/W_CMD			
				B4	IMI_HV_BIAS2_SW	Bias-2 (1:On/0:Off)	ON	OFF				○	
				B5	IMI_HV_BIAS1_SW	Bias-1 (1:On/0:Off)	ON	OFF				○	
				B6	IMI_HV_MAIN_SW	HV Main SW (1:On/0:Off)	ON	OFF				○	
				B7	IMI_HV_MAIN_ENA	Enable/Disable (1/0)	ENABLE	DISABLE				○	
IMI	01	F801	120	B0	IMI_REASON_MODECHNG	Reason for mode change	00:DEFAULT		01:AUTO			○	
				B1	|		10:S/C		11:CMD			
				B2	IMI_SC_MODE_CHANGE	Enable/Disable (1/0)	ENABLE	DISABLE				○	
				B3	IMI_AUTO_MODE_CHNG	Enable/Disable (1/0)	ENABLE	DISABLE				○	
				B4	IMI_INVALID_ERR_CMD	Yes/No (1/0)	YES	NO				○	
				B5	IMI_BIAS_12_REF_SW	On/Off (1/0)	ON	OFF				○	
				B6	IMI_POSTACC_REF_SW	PostAcceleration (1:On/0:Off)	ON	OFF				○	
				B7	IMI_DEFL_HV_REF_SW	Deflection (1:On/0:Off)	ON	OFF				○	
IMI	01	F8F9	414	B0	IMI_FIFO_CONECTION	no data(sleep)=1 / data flow(work)=0	SLEEP	WORK				○	
				B1									
				B2									
				B3									
				B4									
				B5									
				B6									
				B7									
MDC	01 (N/A)	F800	127	B0									
				B1	MDC_NOISE_ALARM	HI/LO(1/0)	HI	LO				○	
				B2	MDC_TEST_HANDLING	SET/OFF(1/0)	SET	OFF				○	
				B3	MDC_CPU_INITIALIZE	END/RUN(1/0)	END	RUN				○	
				B4	MDC_DIG_V_OUTOF_RNG	OUT/OK(1/0)	OUT	OK				○	
				B5	MDC_ANG_V_OUTOF_RNG	OUT/OK(1/0)	OUT	OK				○	
				B6	MDC_HV_OUTOF_RNG	OUT/OK(1/0)	OUT	OK				○	
				B7	MDC_TEMP_OUTOF_RNG	OUT/OK(1/0)	OUT	OK				○	

Table B-2 Bilevel Data List (53/54)

S/S NAME	APID (2nd-H)	ADRS (Hex)	WORD	Bit	SYMBOL	ITEM	STATUS 1	STATUS 0				Inv. Cond	Sub. Cond
MDC	01 (N/A)	F801	128	B0									
				B1									
				B2									
				B3									
				B4									
				B5								○	
				B6	MDC_HV_ENA/DIS	ENA/DIS(1/0)	ENA	DIS				○	
				B7	MDC_HV_ON/OFF	ON/OFF(1/0)	ON	OFF				○	
TPA	01 (N/A)	F800	148	B0	TPA_CPU_BOOT_MODE	CPU_MODE(BOOT:1,NOT:0)	BOOT	NORMAL				○	
				B1	TPA_E_U_MEM_MAP		NVM1	NVM0				○	
				B2	TPA_PIM_I/F_ERR		ERROR	NO_ERROR				○	
				B3	TPA_WDT_ERR		ERROR	NO_ERROR				○	
				B4	TPA_DEPLOY_REDUNDNT		REL	SET				○	
				B5	TPA_DEPLOY_PRIMARY		REL	SET				○	
				B6	TPA_ARM		REL	SET				○	
				B7	TPA_CPU_PWR		ON	OFF				○	
TPA	01 (N/A)	F801	149	B0	TPA_HVPS_POWER		ON	OFF				○	
				B1	TPA_SNSR_DGTL_PWR		ON	OFF				○	
				B2	TPA_SNSR_HTR_PWR		DIS	ENABLE				○	
				B3	TPA_HVPS_RESET		ON	OFF				○	
				B4									
				B5									
				B6	TPA_PIM_STATUS_S1		HI	LOW				○	
				B7	TPA_PIM_STATUS_S0		HI	LOW				○	
TPA	01 (N/A)	F802	150	B0	TPA_MED_V		0:OFF	OTR:ON				○	
				B1	|								
				B2	|								
				B3	|								
				B4									
				B5									
				B6									
				B7									
TPA	01 (N/A)	F802	150	B0	TPA_MED_V_4_VTFS		0:INACTIVE	1:ACTIVE				○	
				B1	TPA_MED_V_3_VES		0:INACTIVE	1:ACTIVE				○	
				B2									
				B3	TPA_MED_V_1_VEA		0:INACTIVE	1:ACTIVE				○	
				B4	TPA_HV_VAN		0:INACTIVE	1:ACTIVE				○	
				B5	TPA_HV_VCP		0:INACTIVE	1:ACTIVE				○	
				B6	TPA_HV_VGD		0:INACTIVE	1:ACTIVE				○	
				B7	TPA_HV_VSA		0:INACTIVE	1:ACTIVE				○	

Table B-2 Bilevel Data List (54/54)

S/S NAME	APID (2nd-H)	ADRS (Hex)	WORD	Bit	SYMBOL	ITEM	STATUS 1	STATUS 0				Inv. Cond	Sub. Cond
TPA	01 (N/A)	F803	151	B0	TPA_SW_STAT_CODE1		1100:C	1101:D	1110:E	1111:F		○	
				B1	|		1000:8	1001:9	1010:A	1011:B			
				B2	|		0100:4	0101:5	0110:6	0111:7			
				B3	|		0000:0	0001:1	0010:2	0011:3			
				B4	TPA_SW_STAT_CODE2		1100:C	1101:D	1110:E	1111:F		○	
				B5	|		1000:8	1001:9	1010:A	1011:B			
				B6	|		0100:4	0101:5	0110:6	0111:7			
				B7	|		0000:0	0001:1	0010:2	0011:3			
NMS	01 (N/A)	F800	129	B0	NMS_DATA_RATE		512					○	
				B1	|		16K						
				B2	|		32K						
				B3	|		64K						
				B4	NMS_ROM/RAM_MODE		RAM	ROM				○	
				B5	NMS_RUN/STBY		RUN	STBY				○	
				B6	NMS_FILAMENT		ON	OFF				○	
				B7	NMS_HV		ON	OFF				○	
NMS	01 (N/A)	F801	130	B0	NMS_RF_ENABLE		ENA	RST				○	
				B1	NMS_OPEN_MODE_FLAG		ON	OFF				○	
				B2	NMS_DISCRI_2		HI	LOW				○	
				B3	NMS_DISCRI_1		HI	LOW				○	
				B4	NMS_EXTERNAL_GRID		LOW	HIGH				○	
				B5	NMS_EV		HI	LOW				○	
				B6	NMS_EM_VOLTAGE		HI	LOW				○	
				B7	NMS_EM_ON/OFF		ON	OFF				○	
NMS	01 (N/A)	F802	131	B0	NMS_HV_ENABLE		ENA	DIS				○	
				B1									
				B2									
				B3									
				B4	NMS_FIRE2		FIRE	NOFIRE				○	
				B5	NMS_ARM2		ARM	UNARM				○	
				B6	NMS_FIRE1		FIRE	NOFIRE				○	
				B7	NMS_ARM1		ARM	UNARM				○	
NMS	01 (N/A)	F802	95	B0									
				B1									
				B2									
				B3	NMS_DIST_NMS	NMS_ON/OFF	OFF	ON					
				B4									
				B5									
				B6									
				B7									

Table B-3 Analog Data List (1/30)

S/S NAME	APID	2nd Header	WORD	BIT	ADRS (HEX)	SYMBOL	ITEM	UNIT	RANGE MIN	RANGE MAX	y=ax**5+bx**4+cx**3+dx**2+ex+f a	b	c	d	e	f	Inv. Cond.	Sub. Cond.
DHU	1	N/A	6	B0-4	8008	DHU_CMD_RJCT_CNT	COMMAND_REJECT_COUNTER											
DHU	1	N/A	9	B0-8	8028	DHU_DMP_HEAD_ADRS_H	DUMP_HEAD_ADDRESS_(HIGH)											
DHU	1	N/A	10	B1-7	8029	DHU_DMP_HEAD_ADRS_L	DUMP_HEAD_ADDRESS_(LOW)											
DHU	1	N/A	11	B0-8	802A	DHU_DMP_DATA_BLK_NO	DUMP_DATA_BLOCK_NUMBER											
DHU	1	N/A	93	B0-3	802B	DHU_DMP_REP_CNT	DUMP_REPEAT_COUNTER											
DHU	1	N/A	93	B3-5	802B	DHU_DMP_OBJ_PIM_ID	DUMP_PIM_ID											
DHU	1	N/A	12	B3-5	8020	DHU_FMT_ID	FORMAT_ID											
DHU	1	N/A	15	B0-2	8016	DHU_CP1_EEPROM_2BER	CPU-1 EEPROM 2BIT_ERROR_COUNTER											
DHU	1	N/A	16	B0-2	8017	DHU_CP2_EEPROM_2BER	CPU-2 EEPROM 2BIT_ERROR_COUNTER											
DHU	1	N/A	17	B0-8	8024	DHU_TIME_DATA	TIME_DATA_MSB=2^26sec=776.7day											
DHU	1	N/A	19	B0-4	802E	DHU_BFM_2B_ERR_CNT	BFM_2BIT_ERROR_COUNTER											
DHU	1	N/A	19	B4-4	802E	DHU_BFM_1B_ERR_CNT	BFM_1BIT_ERROR_COUNTER											
DHU	1	N/A	26	B0-8	F806	DHU_CMD_RJCT_E-CNT	COMMAND_REJECT_ERROR_COUNTER											
DHU	1	N/A	27	B0-8	F807	DHU_L-RAM_1B_E-CNT	L-RAM_1BIT_ERROR_COUNTER											
DHU	1	N/A	28	B0-8	F808	DHU_C-RAM_1B_E-CNT	C-RAM_1BIT_ERROR_COUNTER											
DHU	1	N/A	29	B0-4	F809	DHU_TL-ROM_1B_E-CNT	TLM-ROM_1BIT_ERROR_COUNTER											
DHU	1	N/A	29	B4-4	F809	DHU_AP-ROM_1B_E-CNT	AP-ROM_1BIT_ERROR_COUNTER											
DHU	1	N/A	30	B0-8	F80A	DHU_BF-ROM_1B_E-CNT	BFM-ROM_1BIT_ERROR_COUNTER											
DHU	1	N/A	31	B0-8	F80B	DHU_CMD_SQ_COUNT	COMMAND_SQ_COUNTER											
DHU	1	N/A	32	B0-8	F80C	DHU_BUS_TRANS_E-CNT	BUS_TRANS_ERROR_COUNTER											
DHU	1	N/A	33	B0-4	F80D	DHU_CMD_BLK_E-CNT	COMMAND_BLOCK_ERROR_COUNTER											
DHU	1	N/A	33	B4-4	F80D	DHU_BUS_CHK_E-CNT	BUS_CHECK_ERROR_COUNTER											
DHU	1	N/A	34	B0-8	F80E	DHU_EXEC_CMD_IC	EXECUTION_COMMAND_IC											
DHU	1	N/A	35	B0-8	F80F	DHU_EXEC_DC-XY	EXECUTION_DC-X/Y											
DHU	1	N/A	36	B0-8	F810	DHU_T-SPC_CMD_ENTRY	TIME_SPECIFIED_COMMAND_ENTRY_COUNTER											
DHU	1	N/A	37	B0-24	F811	DHU_2_T-SPC_CMD_TI	2NDARY_TIME_SPECIFIED_CMD_EXEC_TI											
DHU	1	N/A	40	B0-8	F814	DHU_2_T-SPC_CMD_IC	2NDARY_TIME_SPECIFIED_CMD_IC											
DHU	1	N/A	41	B0-8	F815	DHU_2_T-SPC_CMD_DC	2NDARY_TIME_SPECIFIED_CMD_DC-X											
DHU	1	N/A	42	B0-8	F816	DHU_T-SPC_CMD_EXEC	TIME_SPECIFIED_CMD_EXECUTION_COUNTER											
DHU	1	N/A	43	B0-8	F817	DHU_CE_T-INT_CNT	CE_TIME_INTERVAL_COUNT_DOWN											
DHU	1	N/A	44	B0-16	F818	DHU_EXEC_CE_NO	EXECUTION_CE_NUMBER											
DHU	1	N/A	46	B0-4	F81A	DHU_OG/OP_COPY_CNT	OG/OP_COPY_COUNTER											
DHU	1	N/A	46	B4-12	F81A	DHU_EXEC_OG_NO	EXECUTION_OG_NUMBER											
DHU	1	N/A	48	B0-8	F81C	DHU_REQUEST_PIM_ID	REQUEST_PIM_ID											
DHU	1	N/A	49	B0-4	F81D	DHU_RQOG_EXEC_CNT	RQOG_EXECUTION_COUNTER											
DHU	1	N/A	49	B4-4	F81D	DHU_EXEC_RQOG_NO	EXECUTION_RQOG_NUMBER											
DHU	1	N/A	50	B0-4	F81E	DHU_ATOG_EXEC_CNT	ATOG_EXECUTION_COUNTER											
DHU	1	N/A	50	B4-4	F81E	DHU_EXEC_ATOG_NO	EXECUTION_ATOG_NUMBER											

Table B-3 Analog Data List (2/30)

S/S NAME	APID	2nd Header	WORD	BIT	ADRS (HEX)	SYMBOL	ITEM	UNIT	RANGE		y=ax**5+bx**4+cx**3+dx**2+ex+f						Inv.	Sub.
									MIN	MAX	a	b	c	d	e	f	Cond.	Cond.
DHU	1	N/A	51	B0-8	F81F	DHU_DMA_ACC_PIM_ID	DMA_ACCESS_PIM_ID											
DHU	1	N/A	52	B0-16	F820	DHU_SH_TIMER	SH_TIMER MSB=2^26sec=776.7day～2^19											
DHU	2	N/A	7	B5-19	FA03	DHU_RAM_PATROL_ADRS	IPL/DHU RAM PATROL ADDRESS											
DHU	2	N/A	10	B4-20	FA06	DHU_AP_PATROL_ADRS	IPL/AP-ROM PATROL ADDRESS											
DHU	2	N/A	13	B0-8	FA09	DHU_ILL_ERR_CNT	IPL/ILL_INT ERROR COUNTER											
DHU	2	N/A	14	B0-8	FA0A	DHU_CM_RCV_OVF_CNT	IPL/CM_RCV OVF ERR COUNTER											
DHU	2	N/A	15	B0-8	FA0B	DHU_TX_UNIT_COUNTER	IPL/TX UNIT COUNTER											
DHU	2	N/A	17	B0-16	FA0D	DHU_DMP_ADRS	IPL/DMP ADDRESS											
DHU	2	N/A	19	B0-8	FA0F	DHU_DMP_BLK_CNT	IPL/DMP BLK COUNTER											
DHU	2	N/A	20	B0-3	FA10	DHU_DMP_REPETITION	IPL/DMP REPETITION											
DHU	2	N/A	20	B4-8	FA10	DHU_DMP_PIM_ID	IPL/DMP PIM ID											
DHU	2	N/A	21	B0-8	FA11	DHU_DMP_END_FMT	IPL/DHU DUMP END FORMAT											
DHU	2	N/A	22	B5-19	FA12	DHU_RAM_WRT_ADRS	IPL/DHU RAM WR ADDRESS											
DHU	2	N/A	25	B4-20	FA15	DHU_AP-ROM_WRT_ADRS	IPL/AP-ROM WR ADDRESS											
DHU	2	N/A	28	B0-8	FA18	DHU_PRG_TRNS_CNT	IPL/DHU PROG TX COUNTER											
DHU	2	N/A	29	B0-4	FA19	DHU_AP_TX_RETRY_CNT	IPL/DHU AP PROGRAM RETRY COUNTER											
DHU	2	N/A	30	B0-4	FA1A	DHU_OS_TX_RETRY_CNT	IPL/DHU OS PROGRAM RETRY COUNTER											
DHU	2	N/A	31	B0-16	FA1B	DHU_APLI_SUM_CODE	IPL/DHU APLI SUM CODE											
DHU	2	N/A	33	B0-16	FA1D	DHU_RLT_OS_SUM_CODE	IPL/DHU REAL TIME OS SUM CODE											
DHU	2	N/A	35	B5-19	FA1F	DHU_APROM_2BER_ADRS	IPL/AP-ROM 2BIT ERROR ADDRESS											
DHU	2	N/A	38	B4-20	FA22	DHU_RAM_2BER_ADRS	IPL/DHU RAM 2BIT ERROR ADDRESS											
DHU	2	N/A	41	B0-8	FA25	DHU_PRCS_STATUS-1	PROCESS STATUS (L)											
DHU	2	N/A	42	B0-8	FA26	DHU_PRCS_STATUS-2	PROCESS STATUS (H)											
DHU	2	N/A	43	B0-8	FA27	DHU_IDLE_LP_CNT-1	IDLE LOOP COUNTER (L)											
DHU	2	N/A	44	B0-8	FA28	DHU_IDLE_LP_CNT-2	IDLE LOOP COUNTER (H)											
DHU	2	N/A	45	B0-8	FA29	DHU_IDLE_LP_BFR-1	IDLE LOOP COUNTER BEFORE (L)											
DHU	2	N/A	46	B0-8	FA2A	DHU_IDLE_LP_BFR-2	IDLE LOOP COUNTER BEFORE (H)											
DHU	2	N/A	47	B0-8	FA2B	DHU_IDLE_LP_3RD-1	IDLE LOOP COUNTER 3RD (L)											
DHU	2	N/A	48	B0-8	FA2C	DHU_IDLE_LP_3RD-2	IDLE LOOP COUNTER 3RD (H)											
DHU	2	N/A	49	B0-8	FA2D	DHU_CMD_INT_CNT-1	CMD MODE INT COUNTER (L)											
DHU	2	N/A	50	B0-8	FA2E	DHU_CMD_INT_CNT-2	CMD MODE INT COUNTER (H)											
DHU	2	N/A	51	B0-8	FA2F	DHU_CMD_INT_BFR-1	CMD MODE INT COUNTER BEFORE (L)											
DHU	2	N/A	52	B0-8	FA30	DHU_CMD_INT_BFR-2	CMD MODE INT COUNTER BEFORE (H)											
DHU	2	N/A	53	B0-8	FA31	DHU_RST_TI_STATUS-1	RESET TI STATUS (2^2 ～2^-5)											
DHU	2	N/A	54	B0-8	FA32	DHU_RST_TI_STATUS-2	RESET TI STATUS (2^10～2^3)											
DHU	2	N/A	55	B0-8	FA33	DHU_RST_TI_STATUS-3	RESET TI STATUS (2^18～2^11)											
DHU	2	N/A	56	B0-8	FA34	DHU_RST_TI_STATUS-4	RESET TI STATUS (2^26～2^19)											
DHU	2	N/A	57	B0-8	FA35	DHU_RST_INT_CNT-1	RESET INT COUNTER (L)											

Table B-3 Analog Data List (3/30)

S/S NAME	APID	2nd Header	WORD	BIT	ADRS (HEX)	SYMBOL	ITEM	UNIT	RANGE MIN	RANGE MAX	y=ax**5+bx**4+cx**3+dx**2+ex+f a	b	c	d	e	f	Inv. Cond.	Sub. Cond.
DHU	2	N/A	58	B0-8	FA36	DHU_RST_INT_CNT-2	RESET INT COUNTER (H)											
DHU	2	N/A	63	B0-8	FA3B	DHU_RST_CMD_INPCT-1	RESET CMD INPUT COUNTER (L)											
DHU	2	N/A	64	B0-8	FA3C	DHU_RST_CMD_INPCT-2	RESET CMD INPUT COUNTER (H)											
DHU	2	N/A	65	B0-8	FA3D	DHU_RST_CMD_MDCNT-1	RESET CMD MODE COUNTER (L)											
DHU	2	N/A	66	B0-8	FA3E	DHU_RST_CMD_MDCNT-2	RESET CMD MODE COUNTER (H)											
DHU	2	N/A	67	B0-8	FA3F	DHU_RST_TI_INTCNT-1	RESET TI INT COUNTER (L)											
DHU	2	N/A	68	B0-8	FA40	DHU_RST_TI_INTCNT-2	RESET TI INT COUNTER (H)											
DHU	2	N/A	69	B0-8	FA41	DHU_RST_TASK_EXST-1	RESET TASK EXE STATUS (L)											
DHU	2	N/A	70	B0-8	FA42	DHU_RST_TASK_EXST-2	RESET TASK EXE STATUS (H)											
DHU	2	N/A	71	B0-8	FA43	DHU_RST_HNDLR_STS-1	RESET HANDLER EXE STATUS (L)											
DHU	2	N/A	72	B0-8	FA44	DHU_RST_HNDLR_STS-2	RESET HANDLER EXE STATUS (H)											
DHU	2	N/A	73	B0-8	FA45	DHU_OVF_TI-1	OVF TI (2^2 ~2^-5)											
DHU	2	N/A	74	B0-8	FA46	DHU_OVF_TI-2	OVF TI (2^10~2^3)											
DHU	2	N/A	75	B0-8	FA47	DHU_OVF_TI-3	OVF TI (2^18~2^11)											
DHU	2	N/A	76	B0-8	FA48	DHU_OVF_TI-4	OVF TI (2^26~2^19)											
DHU	2	N/A	77	B0-8	FA49	DHU_OVF_TI_INT_CT-1	OVF TI INT COUNTER (L)											
DHU	2	N/A	78	B0-8	FA4A	DHU_OVF_TI_INT_CT-2	OVF TI INT COUNTER (H)											
DHU	2	N/A	83	B0-8	FA4F	DHU_OVF_CMD_INPCN-1	OVF CMD INPUT COUNTER (L)											
DHU	2	N/A	84	B0-8	FA50	DHU_OVF_CMD_INPCN-2	OVF CMD INPUT COUNTER (H)											
DHU	2	N/A	85	B0-8	FA51	DHU_OVF_CMD_MD_CN-1	OVF CMD MODE COUNTER (L)											
DHU	2	N/A	86	B0-8	FA52	DHU_OVF_CMD_MD_CN-2	OVF CMD MODE COUNTER (H)											
DHU	2	N/A	87	B0-8	FA53	DHU_OVF_TI_INT_CN-1	OVF TI INT COUNTER (L)											
DHU	2	N/A	88	B0-8	FA54	DHU_OVF_TI_INT_CN-2	OVF TI INT COUNTER (H)											
DHU	2	N/A	89	B0-8	FA55	DHU_OVF_TASKEX_ST-1	OVF TASK EXE STATUS (L)											
DHU	2	N/A	90	B0-8	FA56	DHU_OVF_TASKEX_ST-2	OVF TASK EXE STATUS (H)											
DHU	2	N/A	91	B0-8	FA57	DHU_OVF_HNDLR_STS-1	OVF HANDLER EXE STATUS (L)											
DHU	2	N/A	92	B0-8	FA58	DHU_OVF_HNDLR_STS-2	OVF HANDLER EXE STATUS (H)											
DHU	2	N/A	93	B0-8	FA59	DHU_SYS_ERR_CODE-1	SYSTEM ERROR CODE (L)											
DHU	2	N/A	94	B0-8	FA5A	DHU_SYS_ERR_CODE-2	SYSTEM ERROR CODE (H)											
DHU	2	N/A	95	B0-8	FA5B	DHU_NON_ACQ_M/POL-1	NON ACQ MEM POOL ADRS (L)											
DHU	2	N/A	96	B0-8	FA5C	DHU_NON_ACQ_M/POL-2	NON ACQ MEM POOL ADRS (H)											
DHU	2	N/A	97	B0-8	FA5D	DHU_ACT_ERTASK_AD-1	ACT ERR TASK ACSS ADRS (L)											
DHU	2	N/A	98	B0-8	FA5E	DHU_ACT_ERTASK_AD-2	ACT ERR TASK ACSS ADRS (H)											
DHU	2	N/A	99	B0-8	FA5F	DHU_ER_NMLTASK_ST-1	ER NML TASK EXE STATUS (L)											
DHU	2	N/A	100	B0-8	FA60	DHU_ER_NMLTASK_ST-2	ER NML TASK EXE STATUS (H)											
DHU	2	N/A	101	B0-8	FA61	DHU_ER_HNDLREX_ST-1	ER HANDLER EXE STATUS (L)											
DHU	2	N/A	102	B0-8	FA62	DHU_ER_HNDLREX_ST-2	ER HANDLER EXE STATUS (H)											
DHU	2	N/A	105	B5-19	FA65	DHU_RAM_PTRL_ADRS	DHU RAM PATROL ADRS											

Table B-3 Analog Data List (4/30)

S/S NAME	APID	2nd Header	WORD	BIT	ADRS (HEX)	SYMBOL	ITEM	UNIT	RANGE		y=ax**5+bx**4+cx**3+dx**2+ex+f						Inv.	Sub.
									MIN	MAX	a	b	c	d	e	f	Cond.	Cond.
DHU	2	N/A	108	B1-23	FA68	DHU_USR_RAM_WR_ADRS	USR RAM WRT ADRS											
DHU	2	N/A	111	B1-23	FA6B	DHU_BFM_OVR_WR_ADRS	BFM OVER WRT ADRS											
DHU	2	N/A	114	B0-8	FA6E	DHU_ILL_INT_CNT	ILL INT COUNTER											
DHU	2	N/A	115	B0-8	FA6F	DHU_CMD_RCV_OVF_CNT	CMD RECIVE OVF ERR COUNT											
DHU	2	N/A	116	B0-16	FA70	DHU_CM_DEC_TASK_CNT	CMD DEC TASK COUNTER											
DHU	2	N/A	118	B0-16	FA72	DHU_CM_DEC_ERR_CNT	CMD DEC ERROR COUNTER											
DHU	2	N/A	120	B0-16	FA74	DHU_OG_COUNTER	OG COUNTER											
DHU	2	N/A	122	B0-16	FA76	DHU_DEC_MEMBLK_ADRS	DEC MEMBLK ACSS ADRS											
DHU	2	N/A	124	B0-16	FA78	DHU_DEC_RQ_TERM	DEC RQ TERM											
DHU	2	N/A	126	B0-8	FA7A	DHU_DEC_PIM_ID	DEC PIM ID											
DHU	2	N/A	127	B0-8	FA7B	DHU_DEC_DC_CMD	DEC DC CMD											
DHU	2	N/A	128	B0-16	FA7C	DHU_BC_CMD_LENGTH	DEC BC CMD LENGTH											
DHU	2	N/A	130	B0-16	FA7E	DHU_CMD_AT_TSK_CNT	CMD AT TSK COUNTER											
DHU	2	N/A	132	B0-16	FA80	DHU_CMD_AT_ERR_CNT	CMD AT ERR COUNTER											
DHU	2	N/A	134	B0-16	FA82	DHU_NEXT_CE_NO	NEXT CE NO.											
DHU	2	N/A	136	B0-16	FA84	DHU_CALL_CE_NO	CALL CE NO.											
DHU	2	N/A	138	B0-16	FA86	DHU_RTN_CE_NO	RTN CE NO.											
DHU	2	N/A	140	B0-8	FA88	DHU_OP_RAM_BLK_NO	OP RAM BLK NO.											
DHU	2	N/A	141	B0-16	FA89	DHU_ATNM_TSK_CNT	ATNM TSK COUNTER											
DHU	2	N/A	143	B0-8	FA8B	DHU_ATNM_ER_CNT	ATNM ER COUNTER											
DHU	2	N/A	144	B0-8	FA8C	DHU_ATNM_HK_ER_CNT	ATNM HK ER COUNTER											
DHU	2	N/A	145	B0-8	FA8D	DHU_ATNM_NO	ATNM NO.											
DHU	2	N/A	146	B0-16	FA8E	DHU_ATNM_HK_NOW	ATNM HK NOW											
DHU	2	N/A	148	B0-16	FA90	DHU_ATNM_HK_LAST	ATNM HK LAST											
DHU	2	N/A	150	B0-8	FA92	DHU_BAT_CAPA	BAT CAPA											
DHU	2	N/A	151	B0-8	FA93	DHU_BAT_DOD	BAT DOD											
DHU	2	N/A	152	B0-8	FA94	DHU_BAT_V	BAT V											
DHU	2	N/A	153	B0-8	FA95	DHU_PWR_UVC_1	PWR UVC 1											
DHU	2	N/A	154	B0-8	FA96	DHU_PWR_UVC_2	PWR UVC 2											
DHU	2	N/A	155	B0-8	FA97	DHU_PWR_UVC_3	PWR UVC 3											
DHU	2	N/A	156	B0-16	FA98	DHU_LST_SDW	LST SDW (2^18~2^3)											
DHU	2	N/A	158	B0-16	FA9A	DHU_SDW_LAP	SDW LAP (2^18~2^3)											
DHU	2	N/A	161	B0-8	FA9D	DHU_BAT_DOD_NOW	BAT DOD NOW											
DHU	2	N/A	163	B0-8	FA9F	DHU_BAT_DOD_LAST	BAT DOD LAST											
DHU	2	N/A	164	B0-16	FAA0	DHU_SH-T_TSK_COUNT	SH-T TSK COUNT											
DHU	2	N/A	166	B0-16	FAA2	DHU_SH-T_ER_COUNT	SH-T ER COUNT											
DHU	2	N/A	168	B0-32	FAA4	DHU_SH-T_TIME-OUT	SH-T TIME-OUT (2^28~2^0)											
DHU	2	N/A	172	B0-16	FAA8	DHU_DMA_TSK_COUNT	DMA TSK COUNT											

Table B-3 Analog Data List (5/30)

S/S NAME	APID	2nd Header	WORD	BIT	ADRS (HEX)	SYMBOL	ITEM	UNIT	RANGE MIN	RANGE MAX	y=ax**5+bx**4+cx**3+dx**2+ex+f a	b	c	d	e	f	Inv. Cond.	Sub. Cond.
DHU	2	N/A	174	B0-16	FAAA	DHU_DMA_ER_COUNT	DMA ER COUNT											
DHU	2	N/A	177	B0-8	FAAD	DHU_DUMP_FMT	DUMP FMT											
DHU	2	N/A	178	B0-8	FAAE	DHU_USR-P_BLK	USR-P BLK											
DHU	2	N/A	179	B0-8	FAAF	DHU_USR-P_LNGT	USR-P LNGT											
DHU	2	N/A	180	B0-16	FAB0	DHU_USR_RQ_TSK_CNT	USR RQ TSK COUNTER											
DHU	2	N/A	182	B0-16	FAB2	DHU_USR_RQ_ER_CNT	USR RQ ER COUNTER											
DHU	2	N/A	184	B0-8	FAB4	DHU_ILL_PIM_ID	ILL PIIM ID											
DHU	2	N/A	185	B0-8	FAB5	DHU_ILL_RQ_CODE	ILL RQ CODE											
DHU	2	N/A	186	B0-8	FAB6	DHU_REQ_REJECT_CNT	RQ REJECTION COUNTER											
DHU	2	N/A	187	B0-16	FAB7	DHU_CMD_IN_TSK_CNT	CMD IN TSK COUNTER											
DHU	2	N/A	189	B0-16	FAB9	DHU_CMD_IN_ER_CNT	CMD IN ER COUNTER											
DHU	2	N/A	191	B0-8	FABB	DHU_TX_UNIT_CNT	TX UNIT COUNTER											
DHU	2	N/A	193	B0-8	FABD	DHU_BC_CMD_COUNTER	BC CMD COUNTER											
DHU	2	N/A	194	B0-16	FABE	DHU_BUS_I/O_TSK_CNT	BUS I/O TSK COUNTER											
DHU	2	N/A	196	B0-16	FAC0	DHU_BUS_I/O_ER_CNT	BUS I/O ER COUNTER											
DHU	2	N/A	198	B0-8	FAC2	DHU_OUTPUT_TO/DC_XY	OUTPUT TO/DC XY											
DHU	2	N/A	199	B0-8	FAC3	DHU_PIM_ID	PIM ID											
DHU	2	N/A	200	B0-8	FAC4	DHU_RQ_USER	RQ USER											
DHU	2	N/A	201	B0-8	FAC5	DHU_RQ_CODE	RQ CODE											
DHU	2	N/A	203	B0-16	FAC7	DHU_TLM_I/O_TSK_CNT	TLM I/O TSK COUNTER											
DHU	2	N/A	205	B0-16	FAC9	DHU_TLM_I/O_ER_CNT	TLM I/O ER COUNTER											
DHU	2	N/A	207	B0-24	FACB	DHU_TI_OF_HK_MONI	TI OF HK MONI (2^18~2^-5)											
DHU	2	N/A	210	B0-16	FACE	DHU_DUMP_ADRS	DUMP ADRS											
DHU	2	N/A	212	B0-8	FAD0	DHU_DUMP_BLK	DUMP BLK											
DHU	2	N/A	213	B0-3	FAD1	DHU_DUMP_REPETITION	IPL/DMP REPETITION											
DHU	2	N/A	213	B4-8	FAD1	DHU_DUMP_PIM_ID	IPL/DMP PIM ID											
DHU	2	N/A	214	B0-8	FAD2	DHU_DUMP_DEF_FMT	DUMP DEF FMT											
DHU	2	N/A	215	B0-16	FAD3	DHU_FMT_MEM_TSK_CNT	FMT MEM TSK COUNTER											
DHU	2	N/A	217	B0-16	FAD5	DHU_FMT_MEM_ER_CNT	FMT MEM ER COUNTER											
DHU	2	N/A	219	B0-8	FAD7	DHU_TLM-ROM_SYNC	TLM-ROM SYNC											
DHU	2	N/A	221	B0-8	FAD9	DHU_SW_HOLD_COUNTER	SW HOLD COUNTER											
DHU	2	N/A	222	B3-21	FADA	DHU_TLM-ROM_ADRS	TLM-ROM ADRS											
DHU	2	N/A	225	B0-16	FADD	DHU_EEPROM_TSK_CNT	EEPROM TSK COUNTER											
DHU	2	N/A	227	B0-16	FADF	DHU_EEPROM_ER_CNT	EEPROM ER COUNTER											
DHU	2	N/A	229	B0-8	FAE1	DHU_WR_DATA_LENGTH	WR DATA LENGTH											
DHU	2	N/A	230	B4-20	FAE2	DHU_AP-ROM_PATRL_AD	AP-ROM PATROL ADRS											
DHU	2	N/A	233	B3-21	FAE5	DHU_T-ROM_PATRL_AD	TLM-ROM PATROL ADRS											
DHU	2	N/A	236	B1-23	FAE8	DHU_BFM_PATROL_ADRS	BFM PATROL ADRS											

Table B-3 Analog Data List (6/30)

S/S NAME	APID	2nd Header	WORD	BIT	ADRS (HEX)	SYMBOL	ITEM	UNIT	RANGE		y=ax**5+bx**4+cx**3+dx**2+ex+f						Inv.	Sub.
									MIN	MAX	a	b	c	d	e	f	Cond.	Cond.
DHU	2	N/A	239	B0-24	FAEB	DHU_EPROM_2BITER_AD	EEPROM 2BIT ER ADRS											
DHU	2	N/A	242	B0-16	FAEE	DHU_TI_TSK_COUNTER	TI TSK COUNTER											
DHU	2	N/A	244	B0-16	FAF0	DHU_TI_ER_COUNTER	TI ER COUNTER											
DHU	2	N/A	246	B0-32	FAF2	DHU_TI_CAL_ABS	TI CAL ABS (2^26~2^-5)											
DHU	2	N/A	250	B0-16	FAF6	DHU_TI_CAL_REL	TI CAL REL (2^10~2^-5)											
DHU	2	N/A	252	B0-16	FAF8	DHU_CPU_I/F_TSK_CNT	CPU I/F TSK COUNTER											
DHU	2	N/A	254	B0-16	FAFA	DHU_CPU_I/F_ER_CNT	CPU I/F ER COUNTER											
DHU	2	N/A	256	B4-20	FAFC	DHU_AP-ROM_WR_ADRS	AP-ROM WR ADRS											
DHU	2	N/A	259	B5-19	FAFF	DHU_RAM_WRITE_ADRS	DHU RAM WRT ADRS											
DHU	1	N/A	262	B7-1	802F	DHU_BFM_ECC_STS	BFM_ECC_STATUS											
DHU	1	N/A	263	B0-24	8012	DHU_C-MEM_ER_ADR	C-MEMORY_ERROR_ADRS											
TCI	1	N/A	79	B0-6	8003	TCI_PDL_OPEN_STATUS	EPT_PDL_DEPLOY_STATUS	D										
TCI	1	N/A	79	B6-2	8003	TCI_SPM_OVER_CNT	SPM_OVER_COUNTER	D										
TCI	1	N/A	313	B0-8	F800	TCI_RF+5V	PSU(RF) 2ND_VOLT (+5V)	V	0	8					0.03096	0		
TCI	1	N/A	314	B0-8	F801	TCI_RF+12V	PSU(RF) 2ND_VOLT (+12V)	V	0	15					0.06457	0		
TCI	1	N/A	315	B0-8	F802	TCI_RF-12V	PSU(RF) 2ND_VOLT (-12V)	V	-15	0					-0.0655	0		
TCI	1	N/A	316	B0-8	F803	TCI_TCI+5V	PSU_2ND_VOLT (+5V)	V	0	8					0.03034	0		
TCI	1	N/A	317	B0-8	F804	TCI_TCI+12V	PSU_2ND_VOLT (+12V)	V	0	15					0.07553	0		
TCI	1	N/A	318	B0-8	F805	TCI_TCI-12V	PSU_2ND_VOLT (-12V)	V	-15	0					-0.0755	0		
TCI	1	N/A	319	B0-8	F806	TCI_TCI+29V	PSU_2ND_VOLT (+29V)	V	0	35					0.16605	0		
TCI	1	N/A	320	B0-8	F807	TCI_DHU+5V	PSU(DHU) 2ND_VOLT (+5V)	V	0	8					0.03034	0		
TCI	1	N/A	321	B0-8	F808	TCI_SBR-A_AGC	SBR-A_AGC_Level	dBm	-50	-152								
TCI	1	N/A	322	B0-8	F809	TCI_SBR-A_LPS	SBR-A_Loop_Stress	KHz	-90	90								
TCI	1	N/A	323	B0-8	F80A	TCI_SBR-B_AGC	SBR-B_AGC_Level	dBm	-50	-152								
TCI	1	N/A	324	B0-8	F80B	TCI_SBR-B_LPS	SBR-B_Loop_Stress	KHz	-90	90								
TCI	1	N/A	325	B0-8	F80C	TCI_TANK-G_P1	GHe_Tank1_High_Press	Kg/cm^2										
TCI	1	N/A	326	B0-8	F80D	TCI_G-2ND_P2	GHe_Tank1_2nd_Press	Kg/cm^2										
TCI	1	N/A	327	B0-8	F80E	TCI_TANK-F_P3	N2H4_Tank_Press	Kg/cm^2										
TCI	1	N/A	328	B0-8	F80F	TCI_TANK-O_P4	NTO_Tank_Press	Kg/cm^2										
TCI	1	N/A	329	B0-8	F810	TCI_HLV_OP/CL	HLV_Open/Close_Monitor	V	0	8					0.02039	0		
TCI	1	N/A	330	B0-8	F811	TCI_LV1_OP/CL	LV1_Open/Close_Monitor	V	0	8					0.02039	0		
TCI	1	N/A	331	B0-8	F812	TCI_LV2_OP/CL	LV2_Open/Close_Monitor	V	0	8					0.02039	0		
TCI	1	N/A	332	B0-8	F813	TCI_AOCE+5V	AOCE_+5_voltage	V	0	8					0.03034	0		
TCI	1	N/A	333	B0-8	F814	TCI_AOCE+12V	AOCE_+12_voltage	V	0	15					0.07626	0		
TCI	1	N/A	334	B0-8	F815	TCI_AOCE-12V	AOCE_-12_voltage	V	-15	0					-0.0596	0		
TCI	1	N/A	335	B0-8	F816	TCI_AOCE+29V	AOCE_+29_voltage	V	0	35					0.16605	0		

Table B-3 Analog Data List (7/30)

S/S NAME	APID	2nd Header	WORD	BIT	ADRS (HEX)	SYMBOL	ITEM	UNIT	RANGE MIN	RANGE MAX	y=ax**5+bx**4+cx**3+dx**2+ex+f a	b	c	d	e	f	Inv. Cond.	Sub. Cond.
TCI	1	N/A	336	B0-16	F817	TCI_SPM_DATA	SPM_DATA	D										
TCI	1	N/A	338	B0-16	F819	TCI_SPM_THR	SPM_THRESHOLD	D										
TCI	8	N/A	9	B0-8	C005	TCI_XSA-H	XSA DATA (H)	D										
TCI	8	N/A	10	B0-8	C006	TCI_XSA-L	XSA DATA (L)	D										
TCI	8	N/A	11	B0-8	C007	TCI_PKM	PKM DATA	D										
HCE	1	N/A	92	B5-3	800A	HCE_ECC_1B_ERR_CNT	ECC_1BIT_ERROR_COUNTER											
HCE	1	N/A	247	B0-8	F800	HCE_NTNK1-T	NTO_TANK_temperature1	C	-50	80					0.5098	-55.02		
HCE	1	N/A	248	B0-8	F801	HCE_NTNK2-T	NTO_TANK_temperature2	C	-50	80					0.5098	-52.47		
HCE	1	N/A	249	B0-8	F802	HCE_HTNK1-T	N2H4_TANK_temperature1	C	-50	80					0.5098	-52.98		
HCE	1	N/A	250	B0-8	F803	HCE_HTNK2-T	N2H4_TANK_temperature2	C	-50	80					0.5098	-53.49		
HCE	1	N/A	251	B0-8	F804	HCE_GTNK1-T	Ghe_TANK_temperature1	C	-50	80					0.5098	-49.92		
HCE	1	N/A	252	B0-8	F805	HCE_GTNK2-T	Ghe_TANK_temperature2	C	-50	80					0.5098	-49.92		
HCE	1	N/A	253	B0-8	F806	HCE_RCSPIP1-T	RCS_PIPE_temperature1	C	-50	80					0.5098	-50.94		
HCE	1	N/A	254	B0-8	F807	HCE_RCSPIP2-T	RCS_PIPE_temperature2	C	-50	80					0.5098	-49.92		
HCE	1	N/A	255	B0-8	F808	HCE_RCSPIP3-T	RCS_PIPE_temperature3	C	-50	80					0.5098	-51.45		
HCE	1	N/A	256	B0-8	F809	HCE_RCSPIP4-T	RCS_PIPE_temperature4	C	-50	80					0.5098	-49.41		
HCE	1	N/A	257	B0-8	F80A	HCE_RCSPIP5-T	RCS_PIPE_temperature5	C	-50	80					0.5098	-50.94		
HCE	1	N/A	258	B0-8	F80B	HCE_HGA2-T	High_Gain_Antenna_Temperature1	C	-50	80								
HCE	1	N/A	259	B0-8	F80C	HCE_VLVM_A-T	Valve_Module_A_temperature	C	-50	80					0.5098	-51.45		
HCE	1	N/A	260	B0-8	F80D	HCE_VLVM_B-T	Valve_Module_B_temperature	C	-50	80					0.5098	-51.45		
HCE	1	N/A	261	B0-8	F80E	HCE_VLVM_C-T	Valve_Module_C_temperature	C	-50	80					0.5098	-50.94		
HCE	1	N/A	262	B0-8	F80F	HCE_OMEVLV1-T	OME_Valve_temperature1	C	-50	80					1.29412	-186.94		
HCE	1	N/A	263	B0-8	F810	HCE_OMEVLV2-T	OME_Valve_temperature2	C	-50	80					1.29412	-186.94		
HCE	1	N/A	264	B0-8	F811	HCE_EMA1-T	Engine_Module_A1_temperature	C	0	130					1.29412	-186.94		
HCE	1	N/A	265	B0-8	F812	HCE_EMA2-T	Engine_Module_A2_temperature	C	0	130					1.29412	-186.94		
HCE	1	N/A	266	B0-8	F813	HCE_EMB1-T	Engine_Module_B1_temperature	C	0	130					1.29412	-188.24		
HCE	1	N/A	267	B0-8	F814	HCE_EMB2-T	Engine_Module_B2_temperature	C	0	130					1.29412	-186.94		
HCE	1	N/A	268	B0-8	F815	HCE_BATA1-T	BAT_A_cell_temperature1	C	-50	80								
HCE	1	N/A	269	B0-8	F816	HCE_BATA2-T	BAT_A_cell_temperature2	C	-50	80								
HCE	1	N/A	270	B0-8	F817	HCE_BATB1-T	BAT_B_cell_temperature1	C	-50	80								
HCE	1	N/A	271	B0-8	F818	HCE_BATB2-T	BAT_B_cell_temperature2	C	-50	80								
HCE	1	N/A	272	B0-8	F819	HCE_XPA-T	XPA_temperature	C	-50	80								
HCE	1	N/A	273	B0-8	F81A	HCE_SSCBLK-T	SSC_bracket_temperature	C	-50	80					0.5098	-48.39		
HCE	1	N/A	274	B0-8	F81B	HCE_PANEL1-T	Panel_temperature1	C	-50	80					0.5098	-51.96		
HCE	1	N/A	275	B0-8	F81C	HCE_PANEL2-T	Panel_temperature2	C	-50	80					0.5098	-51.96		
HCE	1	N/A	276	B0-8	F81D	HCE_PANEL3-T	Panel_temperature3	C	-50	80					0.5098	-52.47		

Table B-3 Analog Data List (8/30)

S/S NAME	APID	2nd Header	WORD	BIT	ADRS (HEX)	SYMBOL	ITEM	UNIT	RANGE MIN	RANGE MAX	y=ax**5+bx**4+cx**3+dx**2+ex+f a	b	c	d	e	f	Inv. Cond.	Sub. Cond.
HCE	1	N/A	277	B0-8	F81E	HCE_PANEL4-T	Panel_temperature4	C	-50	80					0.5098	-51.45		
HCE	1	N/A	278	B0-8	F81F	HCE_CAL-1	CALIBRAT DATA 1	C	-50	80								
HCE	1	N/A	279	B0-8	F820	HCE_USO-T	USO_temperature	C	-78	85								
HCE	1	N/A	280	B0-8	F821	HCE_CAL-3	CALIBRAT DATA 2	C	-50	80								
HCE	1	N/A	281	B0-8	F822	HCE_CAL-4	CALIBRAT DATA 3	C	-50	80								
HCE	1	N/A	282	B0-8	F823	HCE_THRA1-T	RCS_A1_THRUSTER_temperature	C	-50	950					3.92157	-66.2		
HCE	1	N/A	283	B0-8	F824	HCE_THRT1-T	RCS_T1_THRUSTER_temperature	C	-50	950					3.92157	-66.2		
HCE	1	N/A	284	B0-8	F825	HCE_THRR1-T	RCS_R1_THRUSTER_temperature	C	-50	950					3.92157	-66.2		
HCE	1	N/A	285	B0-8	F826	HCE_OMEINJ-T	OME_INJECT_temperature	C	-50	950					1.96078	-119.14		
HCE	1	N/A	286	B0-8	F827	HCE_THRA2-T	RCS_A2_THRUSTER_temperature	C	-50	950					3.92157	-70.11		
HCE	1	N/A	287	B0-8	F828	HCE_THRA3-T	RCS_A3_THRUSTER_temperature	C	-50	950					3.92157	-66.2		
HCE	1	N/A	288	B0-8	F829	HCE_THRA4-T	RCS_A4_THRUSTER_temperature	C	-50	950					3.92157	-66.2		
HCE	1	N/A	289	B0-8	F82A	HCE_THRT2-T	RCS_T2_THRUSTER_temperature	C	-50	950					3.92157	-66.2		
HCE	1	N/A	290	B0-8	F82B	HCE_THRT3-T	RCS_T3_THRUSTER_temperature	C	-50	950					3.92157	-66.2		
HCE	1	N/A	291	B0-8	F82C	HCE_THRT4-T	RCS_T4_THRUSTER_temperature	C	-50	950					3.92157	-66.2		
HCE	1	N/A	292	B0-8	F82D	HCE_THRR2-T	RCS_R2_THRUSTER_temperature	C	-100	400					3.92157	-70.11		
HCE	1	N/A	293	B0-8	F82E	HCE_PDL1-T	Solar_cell_paddle_temperature1	C	-180	150								
HCE	1	N/A	294	B0-8	F82F	HCE_PDL2-T	Solar_cell_paddle_temperature2	C	-180	150								
HCE	1	N/A	295	B0-8	F830	HCE_SHNTA-T	SHUNT-A_temperature	C	-50	80					0.5098	-51.96		
HCE	1	N/A	296	B0-8	F831	HCE_SHNTB-T	SHUNT-B_temperature	C	-50	80					0.5098	-51.45		
HCE	1	N/A	297	B0-8	F832	HCE_SSC-T	SSC_temperature	C	-50	80								
HCE	1	N/A	298	B0-8	F833	HCE_SASBLK-T	SAS_bracket_temperature	C	-50	80								
HCE	1	N/A	299	B0-8	F834	HCE_MST-T	MST_temperature	C	-50	80					0.5098	-49.41		
HCE	1	N/A	300	B0-8	F835	HCE_TMS-T	TMS_temperature	C	-50	80					0.5098	-50.94		
HCE	1	N/A	301	B0-8	F836	HCE_TMX-T	TMX_temperature	C	-50	80					0.5098	-50.43		
HCE	1	N/A	302	B0-8	F837	HCE_PANEL5-T	Panel_temperature5	C	-50	80					0.5098	-50.94		
HCE	1	N/A	303	B0-8	F838	HCE_PANEL6-T	Panel_temperature6	C	-50	80					0.5098	-51.96		
HCE	1	N/A	304	B0-8	F839	HCE_PANEL7-T	Panel_temperature7	C	-50	80					0.5098	-51.96		
HCE	1	N/A	305	B0-8	F83A	HCE_PANEL8-T	Panel_temperature8	C	-50	80					0.5098	-51.96		
HCE	1	N/A	306	B0-8	F83B	HCE_BPANEL1-T	Base_Panel_temperature1	C	-50	80					0.5098	-51.45		
HCE	1	N/A	307	B0-8	F83C	HCE_BPANEL2-T	Base_Panel_temperature2	C	-50	80					0.5098	-49.92		
HCE	1	N/A	308	B0-8	F83D	HCE_BPANEL3-T	Base_Panel_temperature3	C	-50	80					0.5098	-50.94		
HCE	1	N/A	309	B0-8	F83E	HCE_BPANEL4-T	Base_Panel_temperature4	C	-50	80					0.5098	-51.45		
HCE	1	N/A	310	B0-8	F83F	HCE_HGA1-T	HGA_temperature1	C	-180	150								
HCE	9	N/A	4	B0-8	8010	HCE_HISET1	HCE Control Parameter	C										
HCE	9	N/A	5	B0-8	8011	HCE_LOSET1	HCE Control Parameter	C										
HCE	9	N/A	6	B0-8	8012	HCE_HISET2	HCE Control Parameter	C										
HCE	9	N/A	7	B0-8	8013	HCE_LOSET2	HCE Control Parameter	C										

Table B-3 Analog Data List (9/30)

S/S NAME	APID	2nd Header	WORD	BIT	ADRS (HEX)	SYMBOL	ITEM	UNIT	RANGE MIN	RANGE MAX	y=ax**5+bx**4+cx**3+dx**2+ex+f a	b	c	d	e	f	Inv. Cond.	Sub. Cond.
HCE	9	N/A	8	B0-8	8014	HCE_HISET3	HCE Control Parameter	C										
HCE	9	N/A	9	B0-8	8015	HCE_LOSET3	HCE Control Parameter	C										
HCE	9	N/A	10	B0-8	8016	HCE_HISET4	HCE Control Parameter	C										
HCE	9	N/A	11	B0-8	8017	HCE_LOSET4	HCE Control Parameter	C										
HCE	9	N/A	12	B0-8	8018	HCE_HISET5	HCE Control Parameter	C										
HCE	9	N/A	13	B0-8	8019	HCE_LOSET5	HCE Control Parameter	C										
HCE	9	N/A	14	B0-8	801A	HCE_HISET6	HCE Control Parameter	C										
HCE	9	N/A	15	B0-8	801B	HCE_LOSET6	HCE Control Parameter	C										
HCE	9	N/A	16	B0-8	801C	HCE_HISET7	HCE Control Parameter	C										
HCE	9	N/A	17	B0-8	801D	HCE_LOSET7	HCE Control Parameter	C										
HCE	9	N/A	18	B0-8	801E	HCE_HISET8	HCE Control Parameter	C										
HCE	9	N/A	19	B0-8	801F	HCE_LOSET8	HCE Control Parameter	C										
HCE	9	N/A	20	B0-8	8020	HCE_HISET9	HCE Control Parameter	C										
HCE	9	N/A	21	B0-8	8021	HCE_LOSET9	HCE Control Parameter	C										
HCE	9	N/A	22	B0-8	8022	HCE_HISET10	HCE Control Parameter	C										
HCE	9	N/A	23	B0-8	8023	HCE_LOSET10	HCE Control Parameter	C										
HCE	9	N/A	24	B0-8	8024	HCE_HISET11	HCE Control Parameter	C										
HCE	9	N/A	25	B0-8	8025	HCE_LOSET11	HCE Control Parameter	C										
HCE	9	N/A	26	B0-8	8026	HCE_HISET12	HCE Control Parameter	C										
HCE	9	N/A	27	B0-8	8027	HCE_LOSET12	HCE Control Parameter	C										
HCE	9	N/A	28	B0-8	8028	HCE_HISET13	HCE Control Parameter	C										
HCE	9	N/A	29	B0-8	8029	HCE_LOSET13	HCE Control Parameter	C										
HCE	9	N/A	30	B0-8	802A	HCE_HISET14	HCE Control Parameter	C										
HCE	9	N/A	31	B0-8	802B	HCE_LOSET14	HCE Control Parameter	C										
HCE	9	N/A	32	B0-8	802C	HCE_HISET15	HCE Control Parameter	C										
HCE	9	N/A	33	B0-8	802D	HCE_LOSET15	HCE Control Parameter	C										
HCE	9	N/A	34	B0-8	802E	HCE_HISET16	HCE Control Parameter	C										
HCE	9	N/A	35	B0-8	802F	HCE_LOSET16	HCE Control Parameter	C										
HCE	9	N/A	36	B0-8	8030	HCE_HISET17	HCE Control Parameter	C										
HCE	9	N/A	37	B0-8	8031	HCE_LOSET17	HCE Control Parameter	C										
HCE	9	N/A	38	B0-8	8032	HCE_HISET18	HCE Control Parameter	C										
HCE	9	N/A	39	B0-8	8033	HCE_LOSET18	HCE Control Parameter	C										
HCE	9	N/A	40	B0-8	8034	HCE_HISET19	HCE Control Parameter	C										
HCE	9	N/A	41	B0-8	8035	HCE_LOSET19	HCE Control Parameter	C										
HCE	9	N/A	42	B0-8	8036	HCE_HISET20	HCE Control Parameter	C										
HCE	9	N/A	43	B0-8	8037	HCE_LOSET20	HCE Control Parameter	C										
HCE	9	N/A	44	B0-8	8038	HCE_HISET21	HCE Control Parameter	C										
HCE	9	N/A	45	B0-8	8039	HCE_LOSET21	HCE Control Parameter	C										

Table B-3 Analog Data List (10/30)

S/S NAME	APID	2nd Header	WORD	BIT	ADRS (HEX)	SYMBOL	ITEM	UNIT	RANGE		y=ax**5+bx**4+cx**3+dx**2+ex+f						Inv.	Sub.
									MIN	MAX	a	b	c	d	e	f	Cond.	Cond.
HCE	9	N/A	46	B0-8	803A	HCE_HISET22	HCE Control Parameter	C										
HCE	9	N/A	47	B0-8	803B	HCE_LOSET22	HCE Control Parameter	C										
HCE	9	N/A	48	B0-8	803C	HCE_HISET23	HCE Control Parameter	C										
HCE	9	N/A	49	B0-8	803D	HCE_LOSET23	HCE Control Parameter	C										
HCE	9	N/A	50	B0-8	803E	HCE_HISET24	HCE Control Parameter	C										
HCE	9	N/A	51	B0-8	803F	HCE_LOSET24	HCE Control Parameter	C										
HCE	9	N/A	52	B0-8	8040	HCE_HISET25	HCE Control Parameter	C										
HCE	9	N/A	53	B0-8	8041	HCE_LOSET25	HCE Control Parameter	C										
HCE	9	N/A	54	B0-8	8042	HCE_HISET26	HCE Control Parameter	C										
HCE	9	N/A	55	B0-8	8043	HCE_LOSET26	HCE Control Parameter	C										
HCE	9	N/A	56	B0-8	8044	HCE_HISET27	HCE Control Parameter	C										
HCE	9	N/A	57	B0-8	8045	HCE_LOSET27	HCE Control Parameter	C										
HCE	9	N/A	58	B0-8	8046	HCE_HISET28	HCE Control Parameter	C										
HCE	9	N/A	59	B0-8	8047	HCE_LOSET28	HCE Control Parameter	C										
HCE	9	N/A	60	B0-8	8048	HCE_HISET29	HCE Control Parameter	C										
HCE	9	N/A	61	B0-8	8049	HCE_LOSET29	HCE Control Parameter	C										
HCE	9	N/A	62	B0-8	804A	HCE_HISET30	HCE Control Parameter	C										
HCE	9	N/A	63	B0-8	804B	HCE_LOSET30	HCE Control Parameter	C										
HCE	9	N/A	64	B0-8	804C	HCE_HISET31	HCE Control Parameter	C										
HCE	9	N/A	65	B0-8	804D	HCE_LOSET31	HCE Control Parameter	C										
HCE	9	N/A	74	B0-8	8056	HCE_HISET36	HCE Control Parameter	C										
HCE	9	N/A	75	B0-8	8057	HCE_LOSET36	HCE Control Parameter	C										
HCE	9	N/A	76	B0-8	8058	HCE_HISET37	HCE Control Parameter	C										
HCE	9	N/A	77	B0-8	8059	HCE_LOSET37	HCE Control Parameter	C										
HCE	9	N/A	78	B0-8	805A	HCE_HISET38	HCE Control Parameter	C										
HCE	9	N/A	79	B0-8	805B	HCE_LOSET38	HCE Control Parameter	C										
HCE	9	N/A	80	B0-8	805C	HCE_HISET39	HCE Control Parameter	C										
HCE	9	N/A	81	B0-8	805D	HCE_LOSET39	HCE Control Parameter	C										
PCD	1	N/A	216	B0-8	8000	PCD_BATA_K1	BAT-A_K1_data	D										
PCD	1	N/A	217	B0-8	8001	PCD_BATA_K2	BAT-A_K2_data	D										
PCD	1	N/A	218	B0-8	8002	PCD_BATA_C/D	BAT-A_C/D_count_data	D										
PCD	1	N/A	219	B0-8	8003	PCD_BATB_C/D	BAT-B_C/D_count_data	D								0.52084	0	
PCD	1	N/A	220	B0-8	8004	PCD_BATA_EOD	BAT-A_capacity_at_the_end_of_discharge	D								0.52084	0	
PCD	1	N/A	221	B0-8	8005	PCD_BATB_EOD	BAT-B_capacity_at_the_end_of_discharge	D								0.52084	0	
PCD	1	N/A	222	B0-8	800C	PCD_SCP-I	SCP_total_current	A	0	30						0.52084	0	
PCD	1	N/A	223	B0-8	800D	PCD_LOAD-I	TOTAL_LOAD_current	A	0	20						0.123	-0.0208	
																0.0812	-0.1109	

Table B-3 Analog Data List (11/30)

S/S NAME	APID	2nd Header	WORD	BIT	ADRS (HEX)	SYMBOL	ITEM	UNIT	RANGE MIN	RANGE MAX	y=ax**5+bx**4+cx**3+dx**2+ex+f a	b	c	d	e	f	Inv. Cond.	Sub. Cond.
PCD	1	N/A	224	B0-8	800E	PCD_BATA-I	BAT-A_current	A	0	10					0.08342	-10.103		
PCD	1	N/A	225	B0-8	800F	PCD_BATB-I	BAT-B_current	A	0	10					0.08471	-10.394		
PCD	1	N/A	226	B0-8	8010	PCD_HTR-I	HEATER_current	A	0	10					0.03922	0		
PCD	1	N/A	227	B0-8	8011	PCD_RF-I	RF_TOTAL_current	A	0	5					0.01961	0		
PCD	1	N/A	228	B0-8	8012	PCD_XPA-I	XPA_current	A	0	5					0.01961	0		
PCD	1	N/A	229	B0-8	8013	PCD_AOCE-I	AOCE_current	A	0	10					0.03922	0		
PCD	1	N/A	230	B0-8	8014	PCD_DHU-I	DHU_current	A	0	5					0.01961	0		
PCD	1	N/A	231	B0-8	8015	PCD_PSU_CI-I	TCI/HCE/DR/EPT-SA/ENS-SAtotal_current	A	0	5					0.01961	0		
PCD	1	N/A	232	B0-8	8016	PCD_PSA-I	PSA_current	A	0	5					0.01961	0		
PCD	1	N/A	233	B0-8	8017	PCD_PWA-I	PWA_current	A	0	5					0.01961	0		
PCD	1	N/A	234	B0-8	8018	PCD_MPM-I	MPM_current	A	0	5					0.01961	0		
PCD	1	N/A	235	B0-8	8019	PCD_MIC-I	MIC_current	A	0	5					0.01961	0		
PCD	1	N/A	236	B0-8	801A	PCD_TPA-I	TPA_current	A	0	5					0.01961	0		
PCD	1	N/A	237	B0-8	801B	PCD_IMI-I	IMI_current	A	0	5					0.01961	0		
PCD	1	N/A	238	B0-8	801C	PCD_NMS-I	NMS_current	A	0	5					0.01961	0		
PCD	1	N/A	239	B0-8	801D	PCD_MDC-I	MDC_current	A	0	5					0.01961	0		
PCD	1	N/A	240	B0-8	801E	PCD_PCD-I	PCD_current	A	0	5					0.01961	0		
PCD	1	N/A	241	B0-8	801F	PCD_BUS-V	PRIMARY_BUS_voltage	V	0	50					0.1653	-0.7084		
PCD	1	N/A	242	B0-8	8020	PCD_BATA-V	BAT-A_voltage	V	0	50					0.18832	0		
PCD	1	N/A	243	B0-8	8021	PCD_BATB-V	BAT-B_voltage	V	0	50					0.18728	0		
PCD	1	N/A	244	B0-8	8022	PCD_PCD_+5V	PCD_PSU_+5V_VOLTAGE	V	0	8					0.04015	0		
PCD	1	N/A	245	B0-8	8023	PCD_PCD_+12V	PCD_PSU_+12V_VOLTAGE	V	0	15					0.12097	0		
PCD	1	N/A	246	B0-8	8024	PCD_PCD_-12V	PCD_PSU_-12V_VOLTAGE	V	0	15					0.11905	0		
PCD	1	N/A	311	B0-8	8026	PCD_BATB_K1	BAT-B_K1_data	D										
PCD	1	N/A	340	B0-8	8027	PCD_BATB_K2	BAT-B_K2_data	D										
DR	1	N/A	103	B0-8	F802	DR_WR_ADDRESS	WR_ADDRESS											
DR	1	N/A	104	B0-8	F803	DR_RD_ADDRESS	RD_ADDRESS											
DR	1	N/A	105	B0-8	F804	DR_1BIT_ERROR	1BIT_ERROR											
DR	1	N/A	106	B0-8	F805	DR_2BIT_ERROR	2BIT_ERROR											
AOCE	1	N/A	158	B3-5	F806	AOCE_SHDW_ECC_CNTR												
AOCE	1	N/A	60	B0-8	8006	AOCE_CFGBC	CFGBC											
AOCE	1	N/A	64	B6-2	800B	AOCE_EM_ERR_QL	ERROR_MARK											
AOCE	1	N/A	66	B1-10	800D	AOCE_CPU-A_ERR_QL	CPU-A_ERR_FLAG											
AOCE	1	N/A	68	B1-10	800F	AOCE_CPU-B_ERR_QL	CPU-B_ERR_FLAG											

Table B-3 Analog Data List (12/30)

S/S NAME	APID	2nd Header	WORD	BIT	ADRS (HEX)	SYMBOL	ITEM	UNIT	RANGE MIN	RANGE MAX	y=ax**5+bx**4+cx**3+dx**2+ex+f a	b	c	d	e	f	Inv. Cond.	Sub. Cond.
AOCE	1	N/A	70	B1-4	8011	AOCE_CECC-A_ERR_QL	CECC-A_ERR_FLAG											
AOCE	1	N/A	72	B1-4	8011	AOCE_CECC-B_ERR_QL	CECC-B_ERR_FLAG											
AOCE	1	N/A	59	B0-8	8005	AOCE_BC_CMD_ANS	AOCE_BC_COMMAND_ANSER											
AOCE	1	N/A	152	B0-12	F800	AOCE_HK_CTL_STATUS	CONTROL_STATUS											
AOCE	1	N/A	153	B4-4	F801	AOCE_HK_CTL_END_STS	CONTROL_END_STATUS											
AOCE	1	N/A	154	B0-8	F802	AOCE_CMD_FLG	COMMAND_FLAG											
AOCE	1	N/A	155	B0-16	F803	AOCE_ACTION_MONITER	OBS_ACTION_MONITER											
AOCE	1	N/A	156	B0-8	F805	AOCE_SAS_CHECK_STS	SUN_ANGLE_CHECK_STATUS											
AOCE	1	N/A	158	B0-8	F806	AOCE_SHADOW_CPU_STS	SHADOW_CPU_ACTION_STATUS											
AOCE	1	N/A	159	B5-19	F807	AOCE_SSAS_PHASE_HK	SSAS_DATA_PHASE	SEC							0.00012	0		
AOCE	1	N/A	162	B0-8	F80A	AOCE_SSAS-A_SIN	SSAS-A_SIN	V							0.01953	0		
AOCE	1	N/A	163	B0-8	F80B	AOCE_SSAS-A_COS	SSAS-A_COS	V							0.01953	0		
AOCE	1	N/A	164	B1-7	F80C	AOCE_SSAS-A_COARSE	SSAS-A_COARSE_ANGLE											
AOCE	1	N/A	165	B0-8	F80D	AOCE_SSAS-B_SIN	SSAS-B_SIN	V							0.01953	0		
AOCE	1	N/A	166	B0-8	F80E	AOCE_SSAS-B_COS	SSAS-B_COS	V							0.01953	0		
AOCE	1	N/A	167	B1-7	F80F	AOCE_SSAS-B_COARSE	SSAS-B_COARSE_ANGLE											
AOCE	1	N/A	168	B0-16	F810	AOCE_SSAS_PERIOD_HK	SPIN_PERIOD_MEASURED_BY_SSAS	SEC							0.00049	0		
AOCE	1	N/A	170	B0-16	F812	AOCE_IP_PHASE_ERROR	IP_PHASE_ERROR	SEC							0.00012	0		
AOCE	1	N/A	172	B0-16	F814	AOCE_COMP_SUN_ANGL	COMPUTED_SUN_ANGLE	DEG							0.01563	0		
AOCE	1	N/A	174	B0-8	F816	AOCE_SSC_DATA_COUNT	SSC_DATA_COUNT											
AOCE	1	N/A	175	B0-8	F817	AOCE_SSC_HK_STAT	SSC_STATUS_IN_HK											
AOCE	1	N/A	76:9:	B5-19	F818	AOCE_SSC_PHASE_HK	SSC_PHASE	SEC							0.00012	0		
AOCE	1	N/A	79:9:	B0-8	F81B	AOCE_SSC_INTEN_HK	SSC_INTENSITY	V							0.01953	0		
AOCE	1	N/A	212	B0-24	F83C	AOCE_ECC_ADDRESS	ECC_ADDRESS	-										
AOCE	1	N/A	215	B2-6	F83F	AOCE_ECC_COUNTER	ECC_COUNTER											
AOCE	7	03	7	B0-24	FA03	AOCE_REF_TI_M1	AOCS_REFERENCE_TI	SEC							0.125	0		
AOCE	7	03	10	B0-16	FA06	AOCE_128HZ_CNTR_M1	OBS_RUNNING_MONITOR	SEC							0.00781	0		
AOCE	7	03	12	B0-8	FA08	AOCE_SSC_STATUS1	SSC_ON/OFF_STATUS											
AOCE	7	03	13	B0-8	FA09	AOCE_SSC_STATUS2	SSC_BC_STATUS											
AOCE	7	03	14	B0-8	FA0A	AOCE_SENSER_ON/OFF	SSAS/GRS/ACM_ON/OFF_STATUS											
AOCE	7	03	15	B0-16	FA0B	AOCE_RCS/OMS_P_STAT	RCS/OMS_POWER/ON/OFF_STATUS											
AOCE	7	03	17	B0-8	FA0D	AOCE_SSAS_EFF	EFFECTIVE_NO_OF_SSAS											
AOCE	7	03	18	B0-8	FA0E	AOCE_SSAS-A_REJ	REJECTED_SSAS-A_DATA											
AOCE	7	03	19	B0-8	FA0F	AOCE_SSAS-B_REJ	REJECTED_SSAS-B_DATA											
AOCE	7	03	5:10:	B5-19	FA15	AOCE_SSAS_PHASE	SSAS_DATA_PHASE	SEC							0.00012	0		
AOCE	7	03	8:10:	B0-8		AOCE_SSAS_SIN	SSAS_SIN	V							0.01953	0		
AOCE	7	03	9:10:	B0-8		AOCE_SSAS_COS	SSAS_COS	V										
AOCE	7	03	0:10:	B1-7		AOCE_SSAS_COARSE	SSAS_COARSE_ANGLE											

Table B-3 Analog Data List (13/30)

S/S NAME	APID	2nd Header	WORD	BIT	ADRS (HEX)	SYMBOL	ITEM	UNIT	RANGE MIN	RANGE MAX	y=ax**5+bx**4+cx**3+dx**2+ex+f a	b	c	d	e	f	Inv. Cond.	Sub. Cond.
AOCE	7	03	1;10;	B0-16		AOCE_SSAS_PERIOD	SPIN_PERIOD_MEASURED_BY_SSAS	SEC							0.00049	0		
AOCE	7	03	105	B0-8	FA65	AOCE_SSC1_EFF	EFFECTIVE_NO_OF_SSC1											
AOCE	7	03	106	B0-8	FA66	AOCE_SSC1_REJ	REJECTED_NO_OF_SSC1											
AOCE	7	03	107	B0-8	FA67	AOCE_SSC1_MSK	MASKED_NO_OF_SSC1											
AOCE	7	03	108	B0-8	FA68	AOCE_SSC1_THR	DIM_NO_OF_SSC1											
AOCE	7	03	109	B0-8	FA69	AOCE_SSC2_EFF	EFFECTIVE_NO_OF_SSC2											
AOCE	7	03	110	B0-8	FA6A	AOCE_SSC2_REJ	REJECTED_NO_OF_SSC2											
AOCE	7	03	111	B0-8	FA6B	AOCE_SSC2_MSK	MASKED_NO_OF_SSC2											
AOCE	7	03	112	B0-8	FA6C	AOCE_SSC2_THR	DIM_NO_OF_SSC2											
AOCE	7	03	13;29	B5-19	FA6D	AOCE_SSC_PHASE	SSC_PHASE	SEC							0.00012	0		
AOCE	7	03	16;29	B0-8		AOCE_SSC_INTENSITY	SSC_INTENSITY	V							0.01953	0		
AOCE	7	03	231	B0-16	FAE3	AOCE_IP/PC_PERIOD	IP/PC_PERIOD_COUNTER	SEC							0.00195	0		
AOCE	7	03	233	B0-16	FAE5	AOCE_IP_CORRECT_DT	IP_CORRECT_DELTA_T	SEC							0.00012	0		
AOCE	7	03	235	B0-16	FAE7	AOCE_IP_PHS_ERR_SSC	IP_PHASE_ERR_REFERENCE_SSC	SEC							0.00012	0		
AOCE	7	03	237	B0-16	FAE9	AOCE_IP_PERIOD_SSC	IP_PEROD_REFERENCE_SSC	SEC							0.00098	0		
AOCE	7	03	239	B0-16	FAEB	AOCE_IP_STR_PLS_PHS	IP_REFERENCE_STAR_PLUSE_PHASE	SEC							0.00098	0		
AOCE	7	03	241	B0-24	FAED	AOCE_IP_PHASE	IP_PHASE	SEC							0.00012	0		
AOCE	7	03	244	B0-8	FAF0	AOCE_DC_CODE	DC_ANSBACK_CODE											
AOCE	7	03	245	B0-8	FAF1	AOCE_BC_CODE	BC_CODE_ANSBACK											
AOCE	7	03	246	B0-48	FAF2	AOCE_BC_DATA	BC_DATA_ANSBACK											
AOCE	7	03	252	B0-8	FAF8	AOCE_SSC_BC_IMG	SOFTWARE_ANSBACK_OF_SSC_BC											
AOCE	7	03	253	B4-12	FAF9	AOCE_BC_OMS_MBT	OMS_MBT_SET	SEC							0.5	0		
AOCE	7	03	255	B0-24	FAFB	AOCE_BC_IPPC_PORT	IP/PC_MANUAL_MODE_PROT_SET_PARAMETER	SEC							0.5	0		
AOCE	7	03	256	B4-12	FAFC	AOCE_BC_IP_DLY	IP_DELAY_TIME	SEC							0.00024	0		
AOCE	7	03	259	B0-16	FAFF	AOCE_BC_ACMA_B	ACM-A_BIAS_SETTING	V							0.00031	0		
AOCE	7	03	261	B0-16	FB01	AOCE_BC_ACMB_B	ACM-B_BIAS_SETTING	V							0.00031	0		
AOCE	7	03	263	B0-16	FB03	AOCE_BC_ACMC_B	ACM-C_BIAS_SETTING	V							0.00031	0		
AOCE	7	03	265	B0-16	FB05	AOCE_BC_ACMD_B	ACM-D_BIAS_SETTING	V							0.00031	0		
AOCE	7	03	267	B0-16	FB07	AOCE_BC_ACMA_SF	ACM-A_SCALE_FACTOR_SETTING								4.5E-05	0		
AOCE	7	03	269	B0-16	FB09	AOCE_BC_ACMB_SF	ACM-B_SCALE_FACTOR_SETTING								4.5E-05	0		
AOCE	7	03	271	B0-16	FB0B	AOCE_BC_ACMC_SF	ACM-C_SCALE_FACTOR_SETTING								4E-05	0		
AOCE	7	03	273	B0-16	FB0D	AOCE_BC_ACMD_SF	ACM-D_SCALE_FACTOR_SETTING								6.4E-05	0		
AOCE	7	03	275	B0-8	FB0F	AOCE_BC_TLM_SAS	TLM_OUTPUT_SSAS											
AOCE	7	03	276	B0-24	FB10	AOCE_BC_SSCMSK	SSC_MASK_PRM											
AOCE	7	03	277	B0-8	FB11	AOCE_BC_SSCMSKS	START_PHASE_FOR_SSC_MASK	DEG							0.08789	0		
AOCE	7	03	278	B0-8	FB12	AOCE_BC_SSCMSKE	END_PHASE_FOR_SSC_MASK	DEG							0.08789	0		
AOCE	7	03	280	B0-8	FB14	AOCE_BC_SSCTHR	SSC_SOFT_THRESHOLD	V							0.01953	0		
AOCE	7	03	281	B0-8	FB15	AOCE_BC_WATCH_SAS	WATCH_SAS_SEL											

Table B-3 Analog Data List (14/30)

S/S NAME	APID	2nd Header	WORD	BIT	ADRS (HEX)	SYMBOL	ITEM	UNIT	RANGE MIN	RANGE MAX	y=ax**5+bx**4+cx**3+dx**2+ex+f a	b	c	d	e	f	Inv. Cond.	Sub. Cond.
AOCE	7	03	282	B0-8	FB16	AOCE_BC_SASECL	SAS_PERMITED_MAXIMUM_PERIOD	SEC							1	0		
AOCE	7	03	283	B0-8	FB17	AOCE_BC_SACQANG	SUN_ACQ_START_ANGLE	DEG							0.125	0		
AOCE	7	03	284	B0-8	FB18	AOCE_BC_DRIFT	DRIFT_ADMISSION_ON_CONTROL	DEG							0.125	0		
AOCE	7	03	285	B0-8	FB19	AOCE_BC_EFF_REJ	THRESHOLD_OF_EFFECTIVE_OR_REJECTED	DEG							0.125	0		
AOCE	7	03	286	B0-8	FB1A	AOCE_BC_ERRTHRESHOLD	ERROR_THRESHOLD_OF_CONTROL_DIRECTION	DEG							0.125	0		
AOCE	7	03	287	B0-8	FB1B	AOCE_BC_OMS_INTG_DLY	OMS_DV_INTEGRATION_END_DELAY_TIME	SEC							0.125	0		
AOCE	7	03	288	B0-8	FB1C	AOCE_BC_DVACM	ACM_FOR_DV								0.1	0		
AOCE	7	03	292	B5-3	FB20	AOCE_BC_RCSMEM_ID	RCS_MEMORY_SELECT_ID											
AOCE	7	03	292	B0-16	FB20	AOCE_BC_RCSMEM_PRM	RCS_MEMORY_SELECT_PRM											
AOCE	7	03	294	B0-48	FB22	AOCE_SELINF01_BC_IMG	CONTROL_INFORMATION1_OF_SELECTED_RCS_MEMORY											
AOCE	7	03	300	B0-48	FB28	AOCE_SELINF02_BC_IMG	CONTROL_INFORMATION2_OF_SELECTED_RCS_MEMORY											
AOCE	7	03	317	B0-8	FB39	AOCE_BC_IP_ERR_TRD	IPPC_TRACK_ERR_THRESHOLD	SEC										
AOCE	7	03	318	B0-8	FB3A	AOCE_BC_IP_ERR_K0	IP/PC_ERROR_FACTER_K0								0.00391	0		
AOCE	7	03	319	B0-8	FB3B	AOCE_BC_IP_ERR_K1	IP/PC_ERROR_FACTER_K1								0.00392	0		
AOCE	7	03	320	B0-8	FB3C	AOCE_BC_IP_PERIOD_F	IP/PC_PERIOD_FACTER								0.00392	0		
AOCE	7	03	321	B0-16	FB3D	AOCE_BC_IP_PHS_OFSET	IP/PC_STAR_PLS-SUN_PLS_OFSET	DEG							0.00392	0		
AOCE	7	03	323	B0-8	FB3F	AOCE_BC_IP_STAR_HI	IP/PC_SSC_STAR_PLS_WINDOW_HI	V							0.08789	0		
AOCE	7	03	324	B0-8	FB40	AOCE_BC_IP_STAR_LOW	IP/PC_SSC_STAR_PLS_WINDOW_LOW	V							0.01953	0		
AOCE	7	03	325	B0-8	FB41	AOCE_BC_IP_STR_START	IP/PC_SSC_STAR_PLS_WINDOW_START	DEG							0.01953	0		
AOCE	7	03	326	B0-8	FB42	AOCE_BC_IP_STR_END	IP/PC_SSC_STAR_PLS_WINDOW_END	DEG							1.40625	0		
AOCE	7	03	316	B0-40	FB38	AOCE_18	18								1.40625	0		
AOCE	7	03	321	B0-48	FB3D	AOCE_19	19											
AOCE	7	03	327	B0-16	FB43	AOCE_BC_DRFT_CHECK_H	BC_DRIFT_CHECK_HI_DATA											
AOCE	7	03	329	B0-16	FB45	AOCE_BC_DRFT_CHECK_L	BC_DRIFT_CHECK_LOW_DATA											
AOCE	7	03	331	B0-48	FB47	AOCE_PLS_MDL_BC_IMG	PULSE_MODULATION											
AOCE	7	03	340	B0-16	FB50	AOCE_CONTROL_STATUS	CONROL_STATUS											
AOCE	7	03	342	B0-16	FB52	AOCE_CTL_END_STATUS	CONTROL_ENDED_STATUS											
AOCE	7	03	344	B0-8	FB54	AOCE_TGT_WATCH_MODE	TGT_WATCH_MODE											
AOCE	7	03	345	B0-8	FB55	AOCE_OB_SW_STASUS	OBS_STATUS											
AOCE	7	03	346	B0-8	FB56	AOCE_ACM_STATUS	ACM_STATUS											
AOCE	7	03	347	B0-16	FB57	AOCE_AXDV	AXIAL_DV_BY_ACM-A/B	M/S							0.00313	0		
AOCE	7	03	349	B0-16	FB59	AOCE_RDDV-X	RADIAL_DV_X	M/S							0.00313	0		
AOCE	7	03	351	B0-16	FB5B	AOCE_RDDV-Y	RADIAL_DV_Y	M/S							0.00313	0		
AOCE	7	03	353	B0-32	FB5D	AOCE_RDDV2	RADIAL_DV_SQUARED	M2/S2							9.8E-06	0		
AOCE	7	03	357	B0-16	FB61	AOCE_AXDV-C	AXDV_BY_ACM-C	M/S							0.025	0		
AOCE	7	03	359	B0-16	FB63	AOCE_AXDV-D	AXDV_BY_ACM-D	M/S							0.025	0		
AOCE	7	03	361	B0-16	FB65	AOCE_PORT2090	IMAGE_OF_PORT2090											
AOCE	7	03	362	B0-8	FB66	AOCE_CONFIG_BC_SET	CONFIG_BC_SET_UP_DATA											

Table B-3 Analog Data List (15/30)

S/S NAME	APID	2nd Header	WORD	BIT	ADRS (HEX)	SYMBOL	ITEM	UNIT	RANGE MIN	RANGE MAX	y=ax**5+bx**4+cx**3+dx**2+ex+f a	b	c	d	e	f	Inv. Cond.	Sub. Cond.
AOCE	7	03	363	B0-16	FB67	AOCE_PORT2092	IMAGE_OF_PORT2092											
AOCE	7	03	365	B0-16	FB69	AOCE_TOTAL_BURN_TIM1	TOTAL_BURN_TIME1	SEC							0.5	0		
AOCE	7	03	367	B0-8	FB6B	AOCE_TOTAL_BURN_TIM2	TOTAL_BURN_TIME2	SEC							0.00781	0		
AOCE	7	03	368	B0-8	FB6C	AOCE_JET_FIRE_MODE	JET_FIRING_MODE											
AOCE	7	03	369	B0-8	FB6D	AOCE_JET_CLIENT	JET_CLIENT											
AOCE	7	03	372	B4-12	FB70	AOCE_SELECTED RCS 2	SELECTED_RCS_2_(FOR_2IN1)											
AOCE	7	03	374	B2-14	FB72	AOCE_REMAIN_PLS	REMAINING_PULSE_NUMBER	PULSE										
AOCE	7	03	376	B2-14	FB74	AOCE_PLS_DONE	ENDED_PULSE_NUMBER	PULSE										
AOCE	7	03	378	B0-8	FB76	AOCE_J1_P_WIDTH	JET1_PULSE_WIDTH	SEC							0.01563	0		
AOCE	7	03	379	B0-8	FB77	AOCE_J2_P_WIDTH	JET2_PULSE_WIDTH	SEC							0.01563	0		
AOCE	7	03	380	B4-12	FB78	AOCE_J1_P_PHS	JET1_PHASE	DEG							0.08789	0		
AOCE	7	03	382	B4-12	FB7A	AOCE_J2_P_PHS	JET2_PHASE	DEG							0.08789	0		
AOCE	7	03	384	B2-6	FB7C	AOCE_PLS_INTVL	PULSE_INTERVAL	SEC							0.5	0		
AOCE	7	03	385	B2-14	FB7D	AOCE_REMAIN_TIME	REMAINING_TIME	SEC							0.5	0		
AOCE	7	03	387	B2-14	FB7F	AOCE_BURN_TIME1	BURN_TIME1	SEC							0.5	0		
AOCE	7	03	389	B2-6	FB81	AOCE_BURN_TIME2	BURN_TIME2	SEC							0.00781	0		
AOCE	7	03	390	B4-12	FB82	AOCE_OMS_MBT_CNTR	OMS_MINIMUM_BURN_TIMER	SEC							0.5	0		
AOCE	7	03	392	B0-16	FB84	AOCE_ACM-A_EST_BIAS	ACM-A_ESTIMATED_BIAS_LEBEL	V							0.00031	0		
AOCE	7	03	394	B0-16	FB86	AOCE_ACM-B_EST_BIAS	ACM-B_ESTIMATED_BIAS_LEBEL	V							0.00031	0		
AOCE	7	03	396	B0-16	FB88	AOCE_ACM-C_EST_BIAS	ACM-C_ESTIMATED_BIAS_LEBEL	V							0.00031	0		
AOCE	7	03	398	B0-16	FB8A	AOCE_ACM-D_EST_BIAS	ACM-D_ESTIMATED_BIAS_LEBEL	V							0.00031	0		
AOCE	7	03	400	B4-4	FB8C	AOCE_ON-MDL_THRASTER	THRASTER_FOR_ON_MODULATION											
AOCE	7	03	401	B2-14	FB8D	AOCE_MDL_PLS_DONE	NUMBER_OF_ON_MODULATION_PLUSE											
AOCE	7	03	403	B0-8	FB8F	AOCE_MODULE_ERR	MODULE_ERR_STATUS											
AOCE	7	03	404	B0-8	FB90	AOCE_CPU-A_S/W_MODE	CPU-A_S/W_WORK_MODE											
AOCE	7	03	405	B0-16	FB91	AOCE_CPU-A_BCP	CPU-A_BCP_COUNTER											
AOCE	7	03	407	B0-4	FB93	AOCE_CPU-A_1_EVEN	CPU-A_ECC_1BIT_COUNTER:EVEN											
AOCE	7	03	407	B4-4		AOCE_CPU-A_1_ODD	CPU-A_ECC_1BIT_COUNTER_ODD											
AOCE	7	03	408	B0-4	FB94	AOCE_CPU-A_2_EVEN	CPU-A_ECC_2BIT_COUNTER_EVEN											
AOCE	7	03	408	B4-4		AOCE_CPU-A_2_ODD	CPU-A_ECC_2BIT_COUNTER_ODD											
AOCE	7	03	409	B0-24	FB95	AOCE_CPU-A_EVEN_ADRS	CPU-A_ECC_EVEN_ADDRESS											
AOCE	7	03	412	B0-24	FB98	AOCE_CPU-A_ODD_ADRS	CPU-A_ECC_ODD_ADDRESS											
AOCE	7	03	415	B0-8	FB9B	AOCE_CPU-A_INT_CNTR	CPU-A_ILLEGAL_INTERRUPT_COUNTER											
AOCE	7	03	416	B4-4	FB9C	AOCE_CPU-A_BUS_CHK	CPU-A_BUS_CHECK_RESULT											
AOCE	7	03	418	B0-8	FB9E	AOCE_CPU-B_S/W_MODE	CPU-B_S/W_WORK_MODE											
AOCE	7	03	419	B0-16	FB9F	AOCE_CPU-B_BCP	CPU-B_BCP_COUNTER											
AOCE	7	03	421	B0-4	FBA1	AOCE_CPU-B_1_EVEN	CPU-B_ECC_1BIT_COUNTER_EVEN											
AOCE	7	03	421	B4-4		AOCE_CPU-B_1_ODD	CPU-B_ECC_1BIT_COUNTER_ODD											

Table B-3 Analog Data List (16/30)

S/S NAME	APID	2nd Header	WORD	BIT	ADRS (HEX)	SYMBOL	ITEM	UNIT	RANGE MIN	RANGE MAX	y=ax**5+bx**4+cx**3+dx**2+ex+f a	b	c	d	e	f	Inv. Cond.	Sub. Cond.
AOCE	7	03	422	B0-4	FBA2	AOCE_CPU-B_2_EVEN	CPU-B_ECC_2BIT_COUNTER_EVEN											
AOCE	7	03	422	B4-4		AOCE_CPU-B_2_ODD	CPU-B_ECC_2BIT_COUNTER_ODD											
AOCE	7	03	423	B0-24	FBA3	AOCE_CPU-B_EVEN_ADRS	CPU-B_ECC_EVEN_ADDRESS											
AOCE	7	03	426	B0-24	FBA6	AOCE_CPU-B_ODD_ADRS	CPU-B_ECC_ODD_ADDRESS											
AOCE	7	03	429	B0-8	FBA9	AOCE_CPU-B_INT_CNTR	CPU-B_ILLEGAL_INTERRUPT_COUNTER											
AOCE	7	03	430	B4-4	FBAA	AOCE_CPU-B_BUS_CHK	CPU-B_BUS_CHECK_RESULT											
AOCE	7	04	7	B0-24	FA03	AOCE_REF_TI_M2	AOCS_REFERENCE_TI	SEC							0.125	0		
AOCE	7	04	10	B0-16	FA06	AOCE_128HZ_CNTR_M2	OBS_RUNNING_MONITOR	SEC							0.00781	0		
AOCE	7	04	13	B0-16	FA09	AOCE_BC_SSAS_CAL1	SSAS_CAL1_PERIOD	SEC							0.00781	0		
AOCE	7	04	15	B0-8	FA0B	AOCE_BC_CAL_COARSE	SSAS_CAL2_COARSE_ANGLE	DEG							0.5	0		
AOCE	7	04	16	B0-8	FA0C	AOCE_BC_CAL_SIN	SSAS_CAL2_SIN	V							0.01953	0		
AOCE	7	04	17	B0-8	FA0D	AOCE_BC_CAL_COS	SSAS_CAL2_COS	V							0.01953	0		
AOCE	7	04	18	B0-8	FA0E	AOCE_BC_CAL_VRATON	VARIATION_OF_SSAS_CAL2_COARSE_ANGLE	DG/SP							0.5	0		
AOCE	7	04	19	B0-48	FA0F	AOCE_SACINFO1_BC_IMG	CONTROL_INFORMATION1_OF_SUNAC											
AOCE	7	04	25	B0-48	FA15	AOCE_SACINFO2_BC_IMG	CONTROL_INFORMATION2_OF_SUNAC											
AOCE	7	04	31	B0-48	FA1B	AOCE_OFSINFO1_BC_IMG	CONTROL_INFORMATION1_OF_OFSET											
AOCE	7	04	37	B0-48	FA21	AOCE_OFSINFO2_BC_IMG	CONTROL_INFORMATION2_OF_OFSET											
AOCE	7	04	3;8;1	B0-48	FA27	AOCE_MEMINFO1_BC_IMG	CONTROL_INFORMATION1_OF_RCS_MEMORY											
AOCE	7	04	9;8;1	B0-48		AOCE_MEMINFO2_BC_IMG	CONTROL_INFORMATION2_OF_RCS_MEMORY											
AOCE	7	04	139	B0-32	FA87	AOCE_BC_NTO_DEPL	NTO_DEPL_DETECTION											
AOCE	7	04	139	B4-12	FA87	AOCE_BC_NTO_ACMLEVEL	ACM_DECISION_LEVEL_ON_NTO_DRY	V							0.00244	0		
AOCE	7	04	141	B0-8	FA89	AOCE_BC_NTO_COUNTER	DECISION_DATA_COUNTER											
AOCE	7	04	142	B0-8	FA8A	AOCE_BC_NTO_TIME	DECISION_START_TIME	SEC							1	0		
AOCE	7	04	151	B0-8	FA93	AOCE_BC_AT_P_WDT	AT-CTL_PULSE_WIDTH	SEC							0.01563	0		
AOCE	7	04	152	B0-16	FA94	AOCE_BC_AT_OFSET	AT-CTL_CENTROID_OFFSET	DEG							0.08789	0		
AOCE	7	04	151	B0-32	FA96	AOCE_2F	2F											
AOCE	7	04	155	B0-16	FA97	AOCE_BC_ERT_SUNANGLE	ERT-AC_TARGET_SUN_ANGLE	DEG							0.01563	0		
AOCE	7	04	157	B0-16	FA99	AOCE_BC_ERT_PHSANGLE	ERT-AC_PHASE_ANGLE	DEG							0.02197	0		
AOCE	7	04	159	B0-16	FA9B	AOCE_BC_ERT_BTENANGL	ERT-AC_ANGLE_BETWEEN_SUN_AND_REFERENCE_STAR	DEG							0.01563	0		
AOCE	7	04	161	B0-8	FA9D	AOCE_BC_ERT_VRATON	ERT-AC_VARIATION_AT_1PULSE	DEG							0.00195	0		
AOCE	7	04	162	B0-8	FA9E	AOCE_BC_ERT_MAXPLS	ERT-AC_MAX_PULSE_NUMBER	PULSE										
AOCE	7	04	163	B0-8	FA9F	AOCE_BC_ERT_INT_HI	ERT-AC_STAR_PULSE_INTENSITY_HI	V							0.01953	0		
AOCE	7	04	164	B0-8	FAA0	AOCE_BC_ERT_INT_LOW	ERT-AC_STAR_PULSE_INTENSITY_LOW	V							0.01953	0		
AOCE	7	04	165	B0-8	FAA1	AOCE_BC_ERT_PHS_STRT	ERT-AC_STAR_PULSE_PHASE_START	DEG							1.40625	0		
AOCE	7	04	166	B0-8	FAA2	AOCE_BC_ERT_PHS_END	ERT-AC_STAR_PULSE_PHASE_END	DEG							1.40625	0		
AOCE	7	04	155	B0-48	FA97	AOCE_3E	3E											
AOCE	7	04	161	B0-48	FA9D	AOCE_3F	3F											
AOCE	7	04	67;6;	B0-8	FAA3	AOCE_BC_SRCH_START	SRCH_START_TIME	SEC							320	0		

Table B-3 Analog Data List (17/30)

S/S NAME	APID	2nd Header	WORD	BIT	ADRS (HEX)	SYMBOL	ITEM	UNIT	RANGE MIN	RANGE MAX	y=ax**5+bx**4+cx**3+dx**2+ex+f a	b	c	d	e	f	Inv. Cond.	Sub. Cond.
AOCE	7	04	68:6:	B0-8		AOCE_BC_SRCH_PULSE	SRCH_BURN_PULSE_NUMBER	PULSE										
AOCE	7	04	179	B0-16	FAAF	AOCE_BC_SRCH_MAXPLS1	SRCH_MAX_PULSE_ON_1ST_SUN_ACQUISITION	PULSE										
AOCE	7	04	181	B0-16	FAB1	AOCE_BC_SRCH_MAXPLS2	SRCH_MAX_PULSE_ON_REP-SUN_ACQUISITION	PULSE										
AOCE	7	04	167	B0-48	FAA3	AOCE_4D	4D											
AOCE	7	04	173	B0-48	FAA9	AOCE_4E	4E											
AOCE	7	04	179	B0-40	FAAF	AOCE_4F	4F											
AOCE	7	04	183	B0-8	FAB3	AOCE_BC_SRCH_STABLE	SRCH_STABLE_TIME	SEC							64	0		
AOCE	7	04	184	B0-16	FAB4	AOCE_BC_BK_S3	BK-TRK_COEFFICIENT_S3_OF_REFERENCE_SUN_ANGLE								1E-08	0		
AOCE	7	04	186	B0-16	FAB6	AOCE_BC_BK_S2	BK-TRK_COEFFICIENT_S2_OF_REFERENCE_SUN_ANGLE								1E-06	0		
AOCE	7	04	188	B0-16	FAB8	AOCE_BC_BK_S1	BK-TRK_COEFFICIENT_S1_OF_REFERENCE_SUN_ANGLE								0.0001	0		
AOCE	7	04	190	B0-16	FABA	AOCE_BC_BK_P3	BK-TRK_COEFFICIENT_P3_OF_BURN_PHASE								1E-08	0		
AOCE	7	04	192	B0-16	FABC	AOCE_BC_BK_P2	BK-TRK_COEFFICIENT_P2_OF_BURN_PHASE								1E-06	0		
AOCE	7	04	194	B0-16	FABE	AOCE_BC_BK_P1	BK-TRK_COEFFICIENT_P1_OF_BURN_PHASE								0.0001	0		
AOCE	7	04	196	B0-16	FAC0	AOCE_BC_BK_S0	BK-TRK_COEFFICIENT_S0_OF_REFERENCE_SUN_ANGLE	DEG							0.01	0		
AOCE	7	04	198	B0-16	FAC2	AOCE_BC_BK_P0	BK-TRK_COEFFICIENT_P0_OF_BURN_PHASE	DEG							0.01	0		
AOCE	7	04	200	B0-16	FAC4	AOCE_BC_BK_TMR_INIT	BK-TRK_TIMER_INITIAL_VALUE	DAY							0.0037	0		
AOCE	7	04	202	B0-16	FAC6	AOCE_BC_BK_PLS	BK_TRK_MAX_BURN_PLUSE_NUMBER	PULSE										
AOCE	7	04	204	B0-8	FAC8	AOCE_BC_BK_HEATUP	BK-TRK_HEAT_UP_PERIOD	SEC							64	0		
AOCE	7	04	205	B0-8	FAC9	AOCE_BC_BK_TARGET	BK-TRK_TARGET_ANGLE	DEG							0.125	0		
AOCE	7	04	206	B0-8	FACA	AOCE_BC_BK_ERROR	BK-TRK_MAX_ERROR_THRESHOLD_OF_SUN_ANGLE	DEG							0.125	0		
AOCE	7	04	184	B0-48	FAB4	AOCE_5C	5C											
AOCE	7	04	190	B0-48	FABA	AOCE_5D	5D											
AOCE	7	04	196	B0-48	FAC0	AOCE_5E	5E											
AOCE	7	04	202	B0-40	FAC6	AOCE_5F	5F											
AOCE	7	04	207	B0-16	FACB	AOCE_BC_SSC-A_OFSET	SSC-A_PHASE_OFSET_FOR_ERT_AC	DEG							0.04395	0		
AOCE	7	04	209	B0-16	FACD	AOCE_BC_SSC-B_OFSET	SSC-B_PHASE_OFSET_FOR_ERT_AC	DEG							0.04395	0		
AOCE	7	04	222	B0-8	FADA	AOCE_SSC_BC_IMG_ROM	SOFTWARE_ANSBACK_OF_SSC_BC (*:ROM ONLY)									0		
AOCE	7	04	226	B4-12	FADF	AOCE_BC_IP_DLY_ROM	IP_DELAY_TIME (*:ROM ONLY)	SEC							0.00024	0		
AOCE	7	04	230	B0-24	FAE2	AOCE_BC_SSCMSK_ROM	SSC_MASK_PRM (*ROM ONLY)											
AOCE	7	04	231	B0-8	FAE3	AOCE_BC_SSCMSKS_ROM	START_PHASE_FOR_SSC_MASK (*:ROM ONLY)	DEG							0.08789	0		
AOCE	7	04	232	B0-8	FAE4	AOCE_BC_SSCMSKE_ROM	END_PHASE_FOR_SSC_MASK (*:ROM ONLY)	DEG							0.08789	0		
AOCE	7	04	234	B0-8	FAE6	AOCE_BC_SSCTHR_ROM	SSC_SOFT_THRESHOLD (*:ROM ONLY)	V							0.01953	0		
AOCE	7	04	46:12	B0-16	FAF2	AOCE_JCR_INIT_CNTR	JCR_INITIAL_COUNTER	SEC							0.00781	0		
AOCE	7	04	48:12	B0-16		AOCE_JCR_CNTR	JCR_COUNTER	SEC							0.00781	0		
AOCE	7	04	338	B0-8	FB4E	AOCE_ACM-A_TEMP_DATA	ACM-A_TEMP_DATA	DEGC							0.5	-50		
AOCE	7	04	339	B0-8	FB4F	AOCE_ACM-B_TEMP_DATA	ACM-B_TEMP_DATA	DEGC							0.5	-50		
AOCE	7	04	340	B0-8	FB50	AOCE_ACM-C_TEMP_DATA	ACM-C_TEMP_DATA	DEGC							0.5	-50		
AOCE	7	04	341	B0-8	FB51	AOCE_ACM-D_TEMP_DATA	ACM-D_TEMP_DATA	DEGC							0.5	-50		

Table B-3 Analog Data List (18/30)

S/S NAME	APID	2nd Header	WORD	BIT	ADRS (HEX)	SYMBOL	ITEM	UNIT	RANGE MIN	RANGE MAX	y=ax**5+bx**4+cx**3+dx**2+ex+f a	b	c	d	e	f	Inv. Cond.	Sub. Cond.
AOCE	7	04	342	B0-8	FB52	AOCE_ADC_TEMP_DATA	ADC_TEMP_DATA	DEGC							0.39063	-25		
AOCE	7	04	343	B0-16	FB53	AOCE_CMMN_SAS-A_ANGL	COMMON_SSAS-A_DECODED_ANGLE_ON_BOARD	DEG							0.00781	0		
AOCE	7	04	345	B0-16	FB55	AOCE_CMMN_SAS-B_ANGL	COMMON_SSAS-B_DECODED_ANGLE_ON_BOARD	DEG							0.00781	0		
AOCE	7	04	348	B0-8	FB58	AOCE_CMMN_HEATUP	COMMON_HEAT_UP_TIMER	SEC							64	0		
AOCE	7	04	349	B0-8	FB59	AOCE_CMMN_WAIT	COMMON_WAIT_TIMER	SEC							64	0		
AOCE	7	04	350	B0-8	FB5A	AOCE_CMMN_WATCH	COMMON_COUNTER_OF_WATCHED_SUN_ANGLE	SEC							512	0		
AOCE	7	04	350	B0-8	FB5A	AOCE_CMMN_WATCH_ROM	COUNTER_OF_WATCHED_SUN_ANG (*ROM ONLY)	SEC							64	0		
AOCE	7	04	351	B0-16	FB5B	AOCE_CMMN_ANGLE	COMMON_SUN_ANGLE_ON_STARTED_CONTROL	DEG							0.01563	0		
AOCE	7	04	353	B0-8	FB5D	AOCE_ANG_DIFF_ERR	DIFFERENTIAL_ERROR_NUMBER_OF_SUN_ANGLE											
AOCE	7	04	354	B0-16	FB5E	AOCE_BKTRK_CTL_TIMER	BK-TRK_CONTROL_TIMER	DAY							0.0037	0		
AOCE	7	04	356	B0-16	FB60	AOCE_BKTRK_SUNANGLE	BK_TRK_TARGET_SUN_ANGLE	DEG							0.01563	0		
AOCE	7	04	358	B0-16	FB62	AOCE_BKTRK_PHASE	BK_TRK_BURN_PHASE	DEG							0.08789	0		
AOCE	7	04	360	B0-8	FB64	AOCE_BKTRK_CTL_NUM	BK_TRK_CONTROL_COUNT											
AOCE	7	04	361	B0-16	FB65	AOCE_BKTRK_STRTTIME	BK_TRK_START_TIME_ON_STARTED_CONTROL	SEC							32	0		
AOCE	7	04	363	B0-16	FB67	AOCE_BKTRK_PULSE	BK_TRK_BURN_PULSE_NUMBER_FROM_STARTED_CONTROL											
AOCE	7	04	365	B0-8	FB69	AOCE_ERTAC_SASDATA	ERT-AC_SUN_ANGLE_DATA_NUMBER											
AOCE	7	04	366	B0-8	FB6A	AOCE_ERTAC_PULSE	ERT-AC_STAR_PULSE_NUMBER											
AOCE	7	04	367	B0-16	FB6B	AOCE_ERTAC_SUNANGL	ERT-AC_SUN_ANGLE_DATA	DEG							0.01563	0		
AOCE	7	04	369	B0-16	FB6D	AOCE_ERTAC_STAR_PHS	ERT-AC_PHASE_ANGLE_OF_REFERENCE_STAR	DEG							0.04395	0		
AOCE	7	04	371	B0-8	FB6F	AOCE_ERTAC_INTENSITY	ERT-AC_INTENSITY_OF_REFERENCE_STAR	V							0.01953	0		
AOCE	7	04	372	B0-16	FB70	AOCE_ERTAC_BURN_PHS	ERT-AC_BURN_PHASE_ANGLE	DEG							0.08789	0		
AOCE	7	04	374	B0-8	FB72	AOCE_ERTAC_BURN_NUM	ERT-AC_BURN_PULSE_NUMBER											
AOCE	7	04	376	B0-16	FB74	AOCE_SRCH_SUN_ANGL	SRCH_REFERENCE_SUN_ANGLE	DEG							0.01563	0		
AOCE	7	04	378	B5-3	FB76	AOCE_SRCH_SEQUENCE	SRCH_SEQUENCE											
AOCE	7	04	379	B0-16	FB77	AOCE_SRCH_TIMER	SRCH_CONTROL_TIMER_COUNT	SEC							64	0		
AOCE	7	04	381	B0-16	FB79	AOCE_SRCH_NEXT_TIME	SRCH_START_TIME_OF_NEXT_ATTITUDE_CONTROL	SEC							64	0		
AOCE	7	04	383	B0-16	FB7B	AOCE_SRCH_SUM_PULSE	SRCH_SUM_PULSE_NUMBER_0F_CORRECTION_SUN_ANGLE	PULSE										
AOCE	7	04	386	B0-16	FB7E	AOCE_SHD_TIME	SHD_TIME_FROM_STARTED_CONTROL	SEC							64	0		
AOCE	7	04	388	B0-16	FB80	AOCE_SHD_PULSE	SHD_PULSE_NUMBER_ON_ENTRY											
AOCE	7	04	390	B0-8	FB82	AOCE_SHD_COUNT	SHD_CONTROL_COUNT											
AOCE	7	04	392	B0-8	FB84	AOCE_JET_CLIENT_ROM	JET_CLIENT (*:ROM ONLY)											
AOCE	7	04	395	B2-14	FB87	AOCE_REMAIN_PLS_ROM	REMAINING_PULSE_NUMBER (*:ROM ONLY)	PULSE										
AOCE	7	04	397	B2-14	FB89	AOCE_PLS_DONE_ROM	ENDED_PULSE_NUMBER (*:ROM ONLY)	PULSE										
AOCE	7	04	399	B0-8	FB8B	AOCE_J1_P_WIDTH_ROM	JET1_PULSE_WIDTH (*:ROM ONLY)	SEC							0.01563	0		
AOCE	7	04	400	B4-12	FB8C	AOCE_J1_P_PHS_ROM	JET1_PHASE (*:ROM ONLY)	SEC							0.00781	0		
AOCE	7	04	402	B2-14	FB8E	AOCE_REMAIN_TIME_ROM	REMAINING_TIME (*:ROM ONLY)	SEC							0.5	0		
AOCE	7	04	404	B2-14	FB90	AOCE_BURN_TIME1_ROM	BURN_TIME1 (*:ROM ONLY)	SEC							0.5	0		
AOCE	7	04	406	B2-6	FB92	AOCE_BURN_TIME2_ROM	BURN_TIME2 (*:ROM ONLY)	SEC							0.00781	0		

Table B-3 Analog Data List (19/30)

S/S NAME	APID	2nd Header	WORD	BIT	ADRS (HEX)	SYMBOL	ITEM	UNIT	RANGE MIN	RANGE MAX	y=ax**5+bx**4+cx**3+dx**2+ex+f a	b	c	d	e	f	Inv. Cond.	Sub. Cond.
AOCE	7	04	407	B0-16	FB93	AOCE_IP_PERIOD_ROM	IP/PC_PERIOD_COUNTER(*:ROM ONLY)	SEC							0.00195	0		
AOCE	7	04	410	B0-8	FB96	AOCE_USRQ_ID_BUF	USER_REQUEST_ID_BUFFER											
AOCE	7	04	412	B0-8	FB98	AOCE_USRRQ_CURRENT	CURRENT_ID_OF_USER_REQUEST											
AOCE	7	04	413	B0-8	FB99	AOCE_USRRQ_ERROR	ERROR_ID_OF_USER_REQUEST											
AOCE	7	04	414	B0-16	FB9A	AOCE_ILLEGAL_INT	ILLEGAL_INTARRUPT_FLAG											
AOCE	7	04	416	B0-8	FB9C	AOCE_TEST_CMD_ID	TEST_COMMAND_ID											
AOCE	7	04	417	B0-8	FB9D	AOCE_TEST_DATA_HI	TEST_COMMAND_ANSER_DATA_HI_BYTE											
AOCE	7	04	418	B0-8	FB9E	AOCE_TEST_DATA_LOW	TEST_COMMAND_ANSER_DATA_LOW_BYTE											
AOCE	7	04	422	B0-24	FBA2	AOCE_SRC/LOAD_ADRS	TRANSLATE_SOURCE/LOAD_ADDRESS (*:ROM ONLY)											
AOCE	7	04	425	B0-24	FBA5	AOCE_TRGT_ADRS	TRANSLATE_TARGET_ADDRESS (*:ROM ONLY)											
AOCE	7	04	428	B0-8	FBA8	AOCE_BLOCK/DATA	TRANSLATE_BLOCK_NUMBER/DATA_LENGTH (*:ROM ONLY)											
AOCE	7	04	429	B0-8	FBA9	AOCE_CHECK_SUM	CHECK_SUM (*:ROM ONLY)											
AOCE	7	04	430	B0-16	FBAA	AOCE_SEG_ADRS	READ/WRITE(SEGMENT)_ADDRESS (*:ROM ONLY)											
AOCE	7	04	432	B0-16	FBAC	AOCE_OFS_ADRS	READ/WRITE(OFFSET)_ADDRESS (*:ROM ONLY)											
AOCE	7	04	434	B0-16	FBAE	AOCE_R/W_DATA	READ/WRITE_DATA (*:ROM ONLY)								0.125	0		
AOCE	7	05	7	B0-24	FA03	AOCE_REF_TI_M3	AOCS_REFERENCE_TI	SEC							0.00781	0		
AOCE	7	05	10	B0-16	FA06	AOCE_128HZ_CNTR_M3	OBS_RUNNING_MONITOR	SEC							0.00781	0		○
AOCE	7	05	10	B0-16	FA06	AOCE_128HZ_CNTR_M3_1	OBS_RUNNING_MONITOR	SEC							0.00781	0		○
AOCE	7	05	10	B0-16	FA06	AOCE_128HZ_CNTR_M3_2	OBS_RUNNING_MONITOR	SEC							0.00781	0		○
AOCE	7	05	10	B0-16	FA06	AOCE_128HZ_CNTR_M3_3	OBS_RUNNING_MONITOR	SEC							0.00781	0		○
AOCE	7	05	10	B0-16	FA06	AOCE_128HZ_CNTR_M3_4	OBS_RUNNING_MONITOR	SEC							0.00781	0		○
AOCE	7	05	12	B0-8	FA08	AOCE_DATA_INFO_M3	OUTPUT_SENCER_DATA_ID											
AOCE	7	05	13	B0-8	FA09	AOCE_DATA_NO_M3	OUTPUT_SENSER_DATA_NO											○
AOCE	7	05	13	B0-8	FA09	AOCE_DATA_NO_M3_1	OUTPUT_SENSER_DATA_NO											○
AOCE	7	05	13	B0-8	FA09	AOCE_DATA_NO_M3_2	OUTPUT_SENSER_DATA_NO											○
AOCE	7	05	13	B0-8	FA09	AOCE_DATA_NO_M3_3	OUTPUT_SENSER_DATA_NO											○
AOCE	7	05	13	B0-8	FA09	AOCE_DATA_NO_M3_4	OUTPUT_SENSER_DATA_NO											○
AOCE	7	05	6:130	B0-12	FA0C	AOCE_ACM-A_DATA	ACM-A_DATA	V							0.00244	-5	○	
AOCE	7	05	16	B0-12	FA0C	AOCE_ACM-A_DATA_1	ACM-A_DATA	V							0.00244	-5		○
AOCE	7	05	16	B0-12	FA0C	AOCE_ACM-A_DATA_2	ACM-A_DATA	V							0.00244	-5		○
AOCE	7	05	16	B0-12	FA0C	AOCE_ACM-A_DATA_3	ACM-A_DATA	V							0.00244	-5		○
AOCE	7	05	16	B0-12	FA0C	AOCE_ACM-A_DATA_4	ACM-A_DATA	V							0.00244	-5	○	
AOCE	7	05	7:130	B4-12		AOCE_ACM-B_DATA	ACM-B_DATA_(ACM-C/D)								0.00244	-5		○
AOCE	7	05	17	B4-12		AOCE_ACM-B_DATA_1	ACM-B_DATA_(ACM-C/D)	V							0.00244	-5		○
AOCE	7	05	17	B4-12		AOCE_ACM-B_DATA_2	ACM-B_DATA_(ACM-C/D)	V							0.00244	-5		○
AOCE	7	05	17	B4-12		AOCE_ACM-B_DATA_3	ACM-B_DATA_(ACM-C/D)	V							0.00244	-5		○
AOCE	7	05	17	B4-12		AOCE_ACM-B_DATA_4	ACM-B_DATA_(ACM-C/D)	V							0.00244	-5	○	
AOCE	7	05	17	B4-12		AOCE_ACM-C_DATA	ACM-C_DATA	V										

Table B-3 Analog Data List (20/30)

S/S NAME	APID	2nd Header	WORD	BIT	ADRS (HEX)	SYMBOL	ITEM	UNIT	RANGE MIN	RANGE MAX	y=ax**5+bx**4+cx**3+dx**2+ex+f a	b	c	d	e	f	Inv. Cond.	Sub. Cond.
AOCE	7	01	7	B0-24	FA03	AOCE_REF_TI_L2	AOCS_REFERENCE_TI	SEC							0.125	0		
AOCE	7	01	10	B0-16	FA06	AOCE_128HZ_CNTR_L2	OBS_RUNNING_MONITOR	SEC							0.00781	0		
AOCE	7	01	12	B0-8	FA08	AOCE_DATA_INFO_L2	OUTPUT_SENCER_DATA_ID											
AOCE	7	01	13	B0-8	FA09	AOCE_DATA_NO_L2	OUTPUT_SENSER_DATA_NO											
AOCE	7	01	6;50;	B0-12	FA0C	AOCE_ACM-D_DATA_L2	ACM-D_DATA	V							0.00244	-5		
AOCE	7	01	7;50;	B4-10		AOCE_GRS-A_DATA_L2	GRS-A_DATA	V							0.00977	-5		
AOCE	7	01	8;50;	B6-10		AOCE_GRS-B_DATA_L2	GRS-B_DATA	V							0.00977	-5		
AOCE	7	01	216	B0-16	FAD4	AOCE_BC_LCH_ACMA_SF	ACM-A_SCALE_FACTOR_SETTING								4.5E-05	0		
AOCE	7	01	218	B0-16	FAD6	AOCE_BC_LCH_ACMB_SF	ACM-B_SCALE_FACTOR_SETTING								4.5E-05	0		
AOCE	7	01	220	B0-16	FAD8	AOCE_BC_LCH_ACMC_SF	ACM-C_SCALE_FACTOR_SETTING								4E-05	0		
AOCE	7	01	222	B0-16	FADA	AOCE_BC_LCH_ACMD_SF	ACM-D_SCALE_FACTOR_SETTING								4E-05	0		
AOCE	7	01	224	B0-16	FADC	AOCE_BC_GRS-A_BIAS	GRS-A_BIAS_SETTING	V							0.00024	0		
AOCE	7	01	226	B0-16	FADE	AOCE_BC_GRS-B_BIAS	GRS-B_BIAS_SETTING	V							0.00024	0		
AOCE	7	01	228	B0-16	FAE0	AOCE_BC_GRS-A_SF	GRS-A_SCALE_FACTER_SETTING								6.1E-05	0		
AOCE	7	01	230	B0-16	FAE2	AOCE_BC_GRS-B_SF	GRS-B_SCALE_FACTER_SETTING								6.1E-05	0		
AOCE	7	01	232	B0-24	FAE4	AOCE_BC_ATDV_CRCT1	NOMINAL_INJECTION_DV	M/S							0.0625	0		
AOCE	7	01	235	B0-8	FAE7	AOCE_BC_ATDV2_INCMX	MAXIMUM_INCREMENT_AUTO_DV_CORRECTION	M/S							0.5	0		
AOCE	7	01	236	B0-8	FAE8	AOCE_BC_ATDV2_INCMN	MINIMUM_INCREMENT_AUTO_DV_CORRECTION	M/S							0.5	0		
AOCE	7	01	237	B0-8	FAE9	AOCE_BC_ATDV2_DECMX	MAXIMUM_DECREMENT_AUTO_DV_CORRECTION	M/S							0.5	0		
AOCE	7	01	238	B0-8	FAEA	AOCE_BC_ATDV2_DECMN	MINIMUM_DECREMENT_AUTO_DV_CORRECTION	M/S							0.5	0		
AOCE	7	01	239	B0-8	FAEB	AOCE_BC_ATDV2_FACTER	SENSITIVITY_FACTER								0.05	0		
AOCE	7	01	240	B0-8	FAEC	AOCE_BC_ANC_REF_SEN	ANC_REF_SENSER_FOR_SPIN_PERIOOD											
AOCE	7	01	241	B0-8	FAED	AOCE_BC_ANC_TRD_STR	THRESHOLD_OF_CONTROL_START	V							0.01953	0		
AOCE	7	01	242	B0-8	FAEE	AOCE_BC_ANC_TRD_STOP	THRESHOLD_OF_CONTROL_STOP	V							0.01953	0		
AOCE	7	01	243	B0-8	FAEF	AOCE_BC_ANC_DATA_NO	COLLECTING_GRS-B_DATA_NO											
AOCE	7	01	244	B0-16	FAF0	AOCE_BC_T_ACM-D_B_ST	START_TIME_OF_ACM-D_BIAS_ESTIMATION	SEC							0.03125	0		
AOCE	7	01	246	B0-16	FAF2	AOCE_BC_T_ACM-D_B_ED	END_TIME_OF_ACM-D_BIAS_ESTIMATION	SEC							0.03125	0		
AOCE	7	01	248	B0-16	FAF4	AOCE_BC_T_ACM-D_I_ST	START_TIME_OF_ACM-D_INTEGRATION	SEC							0.03125	0		
AOCE	7	01	250	B0-16	FAF6	AOCE_BC_T_ACM-D_I_ED	END_TIME_OF ACM-D_INTEGRATION	SEC							0.03125	0		
AOCE	7	01	252	B0-16	FAF8	AOCE_BC_T_ANC_EN	ANC_ENABLE_TIME	SEC							0.03125	0		
AOCE	7	01	254	B0-16	FAFA	AOCE_BC_T_ANC_START	ANC_START_TIME	SEC							0.03125	0		
AOCE	7	01	256	B0-16	FAFC	AOCE_BC_T_ANC_END	ANC_END_TIME	SEC							0.03125	0		
AOCE	7	01	258	B0-16	FAFE	AOCE_BC_T_ACMAB_B_ST	START_TIME_OF_ACM-AB_BIAS_ESTIMATION	SEC							0.03125	0		
AOCE	7	01	260	B0-16	FB00	AOCE_BC_T_ACMAB_B_ED	END_TIME_OF_ACM-AB_BIAS_ESTIMATION	SEC							0.03125	0		
AOCE	7	01	262	B0-16	FB02	AOCE_BC_T_MK_DV_PRM	TIME_OF_MAKE_DV_AUTO_CORRECTION_PRAMETER	SEC							0.03125	0		
AOCE	7	01	264	B0-16	FB04	AOCE_BC_T_INJ_CNT_ED	END_TIME_OF_INJECTION_CONTROL_SEQUENCE	SEC							0.03125	0		
AOCE	7	01	266	B0-8	FB06	AOCE_BC_REF_INJC_EXE	REFERENCE_FLAG_OF_INJECTION_CONTROL_EXE											
AOCE	7	01	276	B0-8	FB10	AOCE_DC_CODE_LCH	DC_CODE_ANSWER_BACK											

Table B-3 Analog Data List (21/30)

S/S NAME	APID	2nd Header	WORD	BIT	ADRS (HEX)	SYMBOL	ITEM	UNIT	RANGE MIN	RANGE MAX	y=ax**5+bx**4+cx**3+dx**2+ex+f a	b	c	d	e	f	Inv. Cond.	Sub. Cond.
AOCE	7	01	277	B0-8	FB11	AOCE_BC_CODE_LCH	BC_CODE_ANSWER_BACK											
AOCE	7	01	278	B0-8	FB12	AOCE_BC_DATA_LCH	BC_DATA_ANSWER_BACK											
AOCE	7	01	286	B0-16	FB1A	AOCE_LCH_CTL_STATUS	CONROL_STATUS											
AOCE	7	01	288	B0-16	FB1C	AOCE_LCH_CTL_END_STS	CONTROL_ENDED_STATUS											
AOCE	7	01	290	B0-8	FB1E	AOCE_L_TGT_WTCH_MODE	TGT_WATCH_MODE											
AOCE	7	01	291	B0-8	FB1F	AOCE_L_OB_SW_STS	OBS_STATUS											
AOCE	7	01	292	B0-8	FB20	AOCE_L_ACM_STATUS	ACM_STATUS											
AOCE	7	01	293	B0-16	FB21	AOCE_LCH_AXDV	AXIAL_DV_BY_ACM-A/B	M/S							0.00313	0		
AOCE	7	01	295	B0-16	FB23	AOCE_LCH_RDDV-X	RADIAL_DV_X	M/S							0.00313	0		
AOCE	7	01	297	B0-16	FB25	AOCE_LCH_RDDV-Y	RADIAL_DV_Y	M/S							0.00313	0		
AOCE	7	01	299	B0-32	FB27	AOCE_LCH_RDDV2	RADIAL_DV_SQUARED	M2/S2							9.8E-06	0		
AOCE	7	01	303	B0-16	FB2B	AOCE_LCH_AXDV-C	AXDV_BY_ACM-C	M/S							0.025	0		
AOCE	7	01	305	B0-16	FB2D	AOCE_LCH_AXDV-D	AXDV_BY_ACM-D	M/S							0.025	0		
AOCE	7	01	308	B0-8	FB30	AOCE_L_CONFIG_BC_SET	CONFIG_BC_SET_UP_DATA											
AOCE	7	01	309	B0-8	FB31	AOCE_L_JET_FIRE_MODE	JET_FIRING_MODE											
AOCE	7	01	310	B0-8	FB32	AOCE_L_JET_CLIENT	JET_CLIENT											
AOCE	7	01	311	B4-12	FB33	AOCE_L_SELECTED_RCS1	SELECTED_RCS1											
AOCE	7	01	313	B4-12	FB35	AOCE_L_SELECTED_RCS2	SELECTED_RCS2_(FOR_2IN1)											
AOCE	7	01	315	B2-14	FB37	AOCE_L_REMAIN_PLS	REMAINING_PULSE_NUMBER											
AOCE	7	01	317	B2-14	FB39	AOCE_L_PLS_DONE	ENDED_PULSE_NUMBER	PULSE										
AOCE	7	01	319	B0-8	FB3B	AOCE_L_J1_P_WIDTH	JET1_PULSE_WIDTH	PULSE										
AOCE	7	01	320	B0-8	FB3C	AOCE_L_J2_P_WIDTH	JET2_PULSE_WIDTH	SEC							0.01563	0		
AOCE	7	01	321	B4-12	FB3D	AOCE_L_J1_P_PHS	JET1_PHASE	SEC							0.01563	0		
AOCE	7	01	323	B4-12	FB3F	AOCE_L_J2_P_PHS	JET2_PHASE	DEG							0.08789	0		
AOCE	7	01	325	B2-6	FB41	AOCE_L_PLS_INTVL	PULSE_INTERVAL	DEG							0.08789	0		
AOCE	7	01	326	B2-14	FB42	AOCE_L_REMAIN_TIME	REMAINING_TIME	SEC							0.5	0		
AOCE	7	01	328	B2-14	FB44	AOCE_L_BURN_TIME1	BURN_TIME1	SEC							0.5	0		
AOCE	7	01	330	B2-6	FB46	AOCE_L_BURN_TIME2	BURN_TIME2	SEC							0.5	0		
AOCE	7	01	331	B0-16	FB47	AOCE_LACM-A_EST_BIAS	ACM-A_ESTIMATED_BIAS_LEBEL	V							0.00031	0		
AOCE	7	01	333	B0-16	FB49	AOCE_LACM-B_EST_BIAS	ACM-B_ESTIMATED_BIAS_LEBEL	V							0.00031	0		
AOCE	7	01	335	B0-16	FB4B	AOCE_LACM-C_EST_BIAS	ACM-C_ESTIMATED_BIAS_LEBEL	V							0.00031	0		
AOCE	7	01	337	B0-16	FB4D	AOCE_LACM-D_EST_BIAS	ACM-D_ESTIMATED_BIAS_LEBEL	V							0.00031	0		
AOCE	7	01	340	B0-16	FB54	AOCE_INJ_CTL_COUNTER	INJECTION_SEQUENCE_CONTROL_COUNTER	SEC							0.03125	0		
AOCE	7	01	342	B0-16	FB56	AOCE_ANC_MAX_OMEGA	ANC_MAXIMUM_ANGULAR_VEROCITY	V							0.00244	0		
AOCE	7	01	344	B0-16	FB58	AOCE_ANC_REF_PERIOD	ANC_REFERENCIAL SPIN PERIOD	SEC							0.00781	0		
AOCE	7	01	346	B0-16	FB5A	AOCE_ANC_PULSE_NO	ANC_PULSE_NUMBER	PULSE										
AOCE	7	01	348	B0-8	FB58	AOCE_ACM-A_TEMP_L2	ACM-A_TEMP_DATA	DEGC							0.5	-50		
AOCE	7	01	349	B0-8	FB59	AOCE_ACM-B_TEMP_L2	ACM-B_TEMP_DATA	DEGC							0.5	-50		

Table B-3 Analog Data List (22/30)

S/S NAME	APID	2nd Header	WORD	BIT	ADRS (HEX)	SYMBOL	ITEM	UNIT	RANGE MIN	RANGE MAX	y=ax**5+bx**4+cx**3+dx**2+ex+f a	b	c	d	e	f	Inv. Cond.	Sub. Cond.
AOCE	7	01	350	B0-8	FB5A	AOCE_ACM-C_TEMP_L2	ACM-C_TEMP_DATA	DEGC							0.5	-50		
AOCE	7	01	351	B0-8	FB5B	AOCE_ACM-D_TEMP_L2	ACM-D_TEMP_DATA	DEGC							0.5	-50		
AOCE	7	01	352	B0-8	FB5C	AOCE_ADC_TEMP_L2	ADC_TEMP_DATA	DEGC							0.39063	-25		
AOCE	7	01	353	B0-8	FB5D	AOCE_INJ_CTL_STATUS1	INJECTION_CONTROL_STATUS1											
AOCE	7	01	354	B0-8	FB5E	AOCE_INJ_CTL_STATUS2	INJECTION_CONTROL_REFERENCE_FLAG_STATUS											
AOCE	7	01	355	B0-8	FB5F	AOCE_LCPU-A_S/W_MODE	CPU-A_S/W_WORK_MODE											
AOCE	7	01	356	B0-16	FB60	AOCE_LCPU-A_BCP	CPU-A_BCP_COUNTER											
AOCE	7	01	358	B0-4	FB62	AOCE_LCPU-A_1_EVEN	CPU-A_ECC_1BIT_COUNTER_EVEN											
AOCE	7	01	358	B4-4	FB62	AOCE_LCPU-A_1_ODD	CPU-A_ECC_1BIT_COUNTER_ODD											
AOCE	7	01	359	B0-4	FB63	AOCE_LCPU-A_2_EVEN	CPU-A_ECC_2BIT_COUNTER_EVEN											
AOCE	7	01	359	B4-4	FB63	AOCE_LCPU-A_2_ODD	CPU-A_ECC_2BIT_COUNTER_ODD											
AOCE	7	01	360	B0-24	FB64	AOCE_LCPU-A_EVEN_AD	CPU-A_ECC_EVEN_ADDRESS											
AOCE	7	01	363	B0-24	FB67	AOCE_LCPU-A_ODD_ADRS	CPU-A_ECC_ODD_ADDRESS											
AOCE	7	01	366	B0-8	FB6A	AOCE_LCPU-A_INT_CNTR	CPU-A_ILLEGAL_INTERRUPT_COUNTER											
AOCE	7	01	367	B0-8	FB6B	AOCE_LCPU-A_BUS_CHK	CPU-A_BUS_CHECK_RESULT											
AOCE	7	01	369	B0-8	FB6D	AOCE_LCPU-B_S/W_MODE	CPU-B_S/W_WORK_MODE											
AOCE	7	01	370	B0-16	FB6E	AOCE_LCPU-B_BCP	CPU-B_BCP_COUNTER											
AOCE	7	01	372	B0-4	FB70	AOCE_LCPU-B_1_EVEN	CPU-B_ECC_1BIT_COUNTER_EVEN											
AOCE	7	01	372	B4-4	FB70	AOCE_LCPU-B_1_ODD	CPU-B_ECC_1BIT_COUNTER_ODD											
AOCE	7	01	373	B0-4	FB71	AOCE_LCPU-B_2_EVEN	CPU-B_ECC_2BIT_COUNTER_EVEN											
AOCE	7	01	373	B4-4	FB71	AOCE_LCPU-B_2_ODD	CPU-B_ECC_2BIT_COUNTER_ODD											
AOCE	7	01	374	B0-24	FB72	AOCE_LCPU-B_EVEN_AD	CPU-B_ECC_EVEN_ADDRESS											
AOCE	7	01	377	B0-24	FB75	AOCE_LCPU-B_ODD_ADRS	CPU-B_ECC_ODD_ADDRESS											
AOCE	7	01	380	B0-8	FB78	AOCE_LCPU-B_INT_CNTR	CPU-B_ILLEGAL_INTERRUPT_COUNTER											
AOCE	7	01	381	B0-8	FB79	AOCE_LCPU-B_BUS_CHK	CPU-B_BUS_CHECK_RESULT											
AOCE	7	02	7	B0-24	FA03	AOCE_REF_TI_L3	AOCS_REFERENCE_TI	SEC							0.125	0		
AOCE	7	02	10	B0-16	FA06	AOCE_128HZ_CNTR_L3	OBS_RUNNING_MONITOR	SEC							0.00781	0		
AOCE	7	02	10	B0-16	FA06	AOCE_128HZ_CNTR_L3_O	OBS_RUNNING_MONITOR ODD	SEC							0.00781	0		○
AOCE	7	02	10	B0-16	FA06	AOCE_128HZ_CNTR_L3_E	OBS_RUNNING_MONITOR EVEN	SEC							0.00781	0		○
AOCE	7	02	12	B0-8	FA08	AOCE_DATA_INFO_L3	OUTPUT_SENCER_DATA_ID											
AOCE	7	02	13	B0-8	FA09	AOCE_DATA_NO_L3	OUTPUT_SENSER_DATA_NO											
AOCE	7	02	13	B0-8	FA09	AOCE_DATA_NO_L3_O	OUTPUT_SENCER_DATA_NO_ODD											○
AOCE	7	02	13	B0-8	FA09	AOCE_DATA_NO_L3_E	OUTPUT_SENCER_DATA_NO_EVEN											○
AOCE	7	02	6;105	B0-12	FA0C	AOCE_ACM-D_DATA_L3	ACM-D_DATA	V							0.00244	-5		
AOCE	7	02	16	B0-12	FA0C	AOCE_ACM-D_DATA_L3_O	ACM-D_DATA ODD	V							0.00244	-5		○
AOCE	7	02	16	B0-12	FA0C	AOCE_ACM-D_DATA_L3_E	ACM-D_DATA EVEN	V							0.00244	-5		○
AOCE	7	02	7;105	B4-10		AOCE_GRS-A_DATA_L3	GRS-A_DATA	V							0.00977	-5		
AOCE	7	02	17	B4-10		AOCE_GRS-A_DATA_L3_O	GRS-A_DATA ODD	V							0.00977	-5		○

Table B-3 Analog Data List (23/30)

S/S NAME	APID	2nd Header	WORD	BIT	ADRS (HEX)	SYMBOL	ITEM	UNIT	RANGE MIN	RANGE MAX	y=ax**5+bx**4+cx**3+dx**2+ex+f a	b	c	d	e	f	Inv. Cond.	Sub. Cond.
AOCE	7	02	17	B4-10		AOCE_GRS-A_DATA_L3_E	GRS-A_DATA EVEN	V							0.00977	-5		○
AOCE	7	02	3;105	B6-10		AOCE_GRS-B_DATA_L3	GRS-B_DATA	V							0.00977	-5		
AOCE	7	02	18	B6-10		AOCE_GRS-B_DATA_L3_O	GRS-B_DATA ODD	V							0.00977	-5		○
AOCE	7	02	18	B6-10		AOCE_GRS-B_DATA_L3_E	GRS-B_DATA EVEN	V							0.00977	-5		○
PSA	1	N/A	341	B0-8	8010	PSA_E-T	PSA-E TEMPERATURE	C	-50	70					0.4681	-49.26	○	
PSA	1	N/A	342	B0-8	8011	PSA_ESA-S-T	ESA SENSOR TEMPERATURE	C	-50	70					0.4655	-49.6	○	
PSA	1	N/A	343	B0-8	8012	PSA_ISA-S-T	ISA SENSOR TEMPERATURE	C	-50	70					0.4655	-49.14	○	
PSA	1	N/A	344	B0-8	8013	PSA_XUV-S-T	XUV SENSOR TEMPERATURE	C	-50	70					0.4694	-48.94	○	
PSA	1	N/A	345	B0-8	8014	PSA_XUV-MCP-T	XUV MCP TEMPERATURE	C	-50	70					0.4694	-48.94	○	
PSA	1	N/A	346	B0-8	8015	PSA_SV-INT-MON	SV VOLTAGE MONITOR	V	0	10000					39.7727	0	○	
PSA	1	N/A	347	B0-8	8016	PSA_ESA-MESH	ESA MESH VOLTAGE	V	0	-20					-0.0741	0	○	
PSA	1	N/A	348	B0-8	8017	PSA_ESA-HV-OUT	ESA MCP HV OUT VOLTAGE	V	0	5000					20.1149	0	○	
PSA	1	N/A	349	B0-8	8018	PSA_ISA-HV	ISA MCP HV IN VOLTAGE	V	0	-5000					20.1149	0	○	
PSA	1	N/A	350	B0-8	8019	PSA_XUV-HV	XVU MCP HV IN VOLTAGE	V	0	-5000					20.2312	0	○	
PSA	1	N/A	351	B0-8	801A	PSA_EIS-S-T	EIS SENSOR TEMPERATURE	C	-50	70							○	
PSA	1	N/A	352	B0-8	801B	PSA_EIS+5V	EIS +5V POWER SUPPLY	V	0	10					0.03906	0	○	
PSA	1	N/A	353	B0-8	801C	PSA_EIS+12V	EIS +12V POWER SUPPLY	V	0	15					0.05607	0	○	
PSA	1	N/A	354	B0-8	801D	PSA_EIS-12V	EIS -12V POWER SUPPLY	V	-15	0					-0.0563	0	○	
PSA	1	N/A	355	B0-8	801E	PSA_EIS-MCP	EIS MCP HIGH VOLTAGE	V	0	5000							○	
PSA	1	N/A	356	B0-8	801F	PSA_EIS-SSD	EIS SSD HIGH VOLTAGE	V	0	250							○	
PSA	1	N/A	109	B0-8	F800	PSA_EIS_INT_TIME	EIS INTEGRATION TIME										○	○
PSA	1	N/A	109	B0-1	F800	PSA_EIS_TOF_TBL	EIS TOF TABLE NUMBER										○	○
PSA	1	N/A	109	B1-1	F800	PSA_EIS_EDE_TBL	EIS EDE TABLE NUMBER										○	○
PSA	1	N/A	109	B6-2	F800	PSA_EIS_SSD_SET_LBL	EIS SSD HV SET LBL										○	○
PSA	1	N/A	110	B2-5	F801	PSA_EIS_MODE	EIS OBSERVATION MODE										○	○
PSA	1	N/A	110	B0-8	F801	PSA_XUV_HV_SET_LVL	XUV MCP HV SET LEVEL		0	127							○	○
PSA	1	N/A	111	B0-8	F802	PSA_ESA_HV_SET_LVL	ESA MCP HV SET LEVEL		0	127							○	○
PSA	1	N/A	111	B0-8	F802	PSA_ISA_HV_SET_LVL	ISA MCP HV SET LEVEL		0	127							○	○
PSA	11	N/A	103	B0-8	F802	PSA_ISA_HV_SET_LV11	ISA MCP HV SET LEVEL		0	127							○	○
PWA	1	N/A	357	B0-8	8010	PWA_LFA_E_T	LFA DSP TEMPERATURE	C							0.51	-50	○	
PWA	1	N/A	358	B0-8	8011	PWA_PWS_RX1_T	PWS RX OP-AMP TEMPERATURE (RX IC6)	C							0.51	-50	○	
PWA	1	N/A	359	B0-8	8012	PWA_PWS_PAMP1_T	PWS POWER TR TEMPERATURE (PAMP Q3)	C							0.51	-50	○	
PWA	1	N/A	360	B0-8	8013	PWA_PWS_DCDC+45V	PWS DCDC VOLTAGE	V							0.24	0	○	
PWA	1	N/A	361	B0-8	8014	PWA_PWS_DCDC_T	PWS DCDC TEMPERATURE	C							0.51	-50	○	

Table B-3 Analog Data List (24/30)

S/S NAME	APID	2nd Header	WORD	BIT	ADRS (HEX)	SYMBOL	ITEM	UNIT	RANGE MIN	RANGE MAX	y=ax**5+bx**4+cx**3+dx**2+ex+f a	b	c	d	e	f	Inv. Cond.	Sub. Cond.
PWA	1	N/A	362	B0-8	8015	PWA_PWS_LOCAL_T	PWS DDS TEMPERATURE	C							0.51	-50	○	
PWA	1	N/A	363	B0-8	1016	PWA_PWS_RX2_T	PWS LOG AMP TEMPERATURE (RX IC19)	C							0.51	-50	○	
PWA	1	N/A	364	B0-8	8017	PWA_PWS_PAMP2_T	PWS PAMP HIC TEMPERATURE (PAMP IC2)	C							0.51	-50	○	
PWA	1	N/A	365	B0-8	8018	PWA_WNT1_T	WANT1 TEMPERATURE	C							0.51	-50	○	
PWA	1	N/A	366	B0-8	8019	PWA_WNT2_T	WANT2 TEMPERATURE	C							0.51	-50	○	
PWA	1	N/A	367	B0-8	801A	PWA_WNT3_T	WANT3 TEMPERATURE	C							0.51	-50	○	
PWA	1	N/A	368	B0-8	801B	PWA_WNT4_T	WANT4 TEMPERATURE	C							0.51	-50	○	
PWA	1	N/A	369	B0-8	801C	PWA_+5V	PWA +5 VOLTAGE	V							0.03125	0	○	
PWA	1	N/A	370	B0-8	801D	PWA_+12V	PWA +12 VOLTAGE	V							0.0586	0	○	
PWA	1	N/A	371	B0-8	801E	PWA_-12V	PWA -12 VOLTAGE	V							-0.0586	0	○	
PWA	1	N/A	372	B0-8	801F	PWA_+29V	PWA +29 VOLTAGE	V							0.137	0	○	
PWA	1	N/A	139	B0-8	F806	PWA_PWS_LOCAL	PWS FREQ STEP								1	0	○	○
PWA	1	N/A	140	B0-8	F807	PWA_PWS_TX_STRT_PC	PWS TX START PC								1	0	○	○
PWA	1	N/A	141	B0-8	F808	PWA_PWS_TX_STOP_PC	PWS TX STOP PC								1	0	○	○
PWA	1	N/A	142	B4-4	F809	PWA_PWS_MENU_N	PWS MENU NUMBER								1	0	○	○
PWA	1	N/A	143	B4-4	F80A	PWA_PWS_MODE_N	PWS MODE NUMBER								1	0	○	○
PWA	1	N/A	143	B0-1	F80A	PWA_PWS_MODE_G3	PWS MODE GROUP(B0)--SPW/NPW										○	○
PWA	1	N/A	139	B0-8	F806	PWA_PWS_CB1_MONI	PWS C-BANK1 MONITOR	V							0.334	0	○	○
PWA	1	N/A	140	B0-8	F807	PWA_PWS_CB2_MONI	PWS C-BANK2 MONITOR	V							0.334	0	○	○
PWA	1	N/A	141	B0-8	F808	PWA_PWS_CB3_MONI	PWS C-BANK3 MONITOR	V							0.334	0	○	○
PWA	1	N/A	142	B0-8	F809	PWA_PWS_CB4_MONI	PWS C-BANK4 MONITOR	V							0.334	0	○	○
PWA	1	N/A	143	B0-8	F80A	PWA_PWS_PWR_MONI	PWS POWER MONITOR	V							1.023	0	○	○
PWA	1	N/A	147	B5-1	F80E	PWA_CPU_WNT_RUN	CPU WANT PROGRAM RUN										○	
PWA	1	N/A	147	B5-1	F80E	PWA_CPU_WNT_HK	CPU WANT/OBS(AOCS) RUN										○	
PWA	1	N/A	147	B5-1	F80E	PWA_CPU_OBS_RUN	CPU PWS/LFA PROGRAM RUN										○	
PWA	1	N/A	133	B0-8	F800	PWA_WNT1_LEN_MONI	WANT1 LENGTH MONITOR	m							0.102	0	○	
PWA	1	N/A	134	B0-8	F801	PWA_WNT2_LEN_MONI	WANT2 LENGTH MONITOR	m							0.102	0	○	
PWA	1	N/A	135	B0-8	F802	PWA_WNT3_LEN_MONI	WANT3 LENGTH MONITOR	m							0.102	0	○	
PWA	1	N/A	136	B0-8	F803	PWA_WNT4_LEN_MONI	WANT4 LENGTH MONITOR	m							0.102	0	○	
PWA	1	N/A	137	B0-8	F804	PWA_WNT1_VIB_EL	WANT1 VIBRATION ANGLE (ELEVATION)	deg							-0.0314	4	○	
PWA	1	N/A	138	B0-8	F805	PWA_WNT1_VIB_AZ	WANT1 VIBRATION ANGLE (AZIMUTH)	deg							0.0314	-4	○	
PWA	1	N/A	139	B0-8	F806	PWA_WNT2_VIB_EL	WANT2 VIBRATION ANGLE (ELEVATION)	deg							-0.0314	4	○	
PWA	1	N/A	140	B0-8	F807	PWA_WNT2_VIB_AZ	WANT2 VIBRATION ANGLE (AZIMUTH)	deg							0.0314	-4	○	
PWA	1	N/A	141	B0-8	F808	PWA_WNT3_VIB_EL	WANT3 VIBRATION ANGLE (ELEVATION)	deg							-0.0314	4	○	
PWA	1	N/A	142	B0-8	F809	PWA_WNT3_VIB_AZ	WANT3 VIBRATION ANGLE (AZIMUTH)	deg							0.0314	-4	○	
PWA	1	N/A	143	B0-8	F80A	PWA_WNT4_VIB_EL	WANT4 VIBRATION ANGLE (ELEVATION)	deg							-0.0314	4	○	
PWA	1	N/A	144	B0-8	F80B	PWA_WNT4_VIB_AZ	WANT4 VIBRATION ANGLE (AZIMUTH)	deg							0.0314	-4	○	
PWA	12	N/A	4	B0-8		PWA_PAC_NO	PACKET NUMBER										○	

Table B-3 Analog Data List (25/30)

S/S NAME	APID	2nd Header	WORD	BIT	ADRS (HEX)	SYMBOL	ITEM	UNIT	RANGE MIN	RANGE MAX	y=ax**5+bx**4+cx**3+dx**2+ex+f a	b	c	d	e	f	Inv. Cond.	Sub. Cond.
PWA	12	N/A	6	B0-24		PWA_PAC_TI	PACKET OUTPUT TI										○	
PWA	12	N/A	9	B3-13		PWA_PAC_PC	PACKET OUTPUT PC										○	
PWA	12	07:03	12	B0-8		PWA_WNT1_VIB_EL/O	WANT1 VIBRATION ANGLE (ELEVATION)	deg							-0.0314	4	○	
PWA	12	07:03	13	B0-8		PWA_WNT1_VIB_AZ/O	WANT1 VIBRATION ANGLE (AZIMUTH)	deg							0.0314	-4	○	
PWA	12	07:03	14	B0-8		PWA_WNT2_VIB_EL/O	WANT2 VIBRATION ANGLE (ELEVATION)	deg							-0.0314	4	○	
PWA	12	07:03	15	B0-8		PWA_WNT2_VIB_AZ/O	WANT2 VIBRATION ANGLE (AZIMUTH)	deg							0.0314	-4	○	
PWA	12	07:03	16	B0-8		PWA_WNT3_VIB_EL/O	WANT3 VIBRATION ANGLE (ELEVATION)	deg							-0.0314	4	○	
PWA	12	07:03	17	B0-8		PWA_WNT3_VIB_AZ/O	WANT3 VIBRATION ANGLE (AZIMUTH)	deg							0.0314	-4	○	
PWA	12	07:03	18	B0-8		PWA_WNT4_VIB_EL/O	WANT4 VIBRATION ANGLE (ELEVATION)	deg							-0.0314	4	○	
PWA	12	07:03	19	B0-8		PWA_WNT4_VIB_AZ/O	WANT4 VIBRATION ANGLE (AZIMUTH)	deg							0.0314	-4	○	
PWA	12	07:06	12	B0-16		PWA_ECC_ERR_NUM	ECC ERROR COUNT								1	0	○	
PWA	12	07:06	14	B0-24		PWA_ECC_ERR_ADR	ECC ERROR ADDRESS										○	
PWA	12	07:07	17	B0-24		PWA_ECC_CHK_ADR	ECC CHECK ADDRESS										○	
PWA	12	07:07	12	B0-16		PWA_COM_STORE_PT	COMMAND STORE POINTER										○	
PWA	12	07:07	14	B0-16		PWA_COM_EXEC_PT	COMMAND EXEC POINTER										○	
PWA	12	07:07	16	B0-16		PWA_DATA_WRITE_PT	MISSION DATA WRITE POINTER										○	
PWA	12	07:07	18	B0-16		PWA_DATA_READ_PT	MISSION DATA READ POINTER										○	
PWA	12	N/A	420	B0-8		PWA_PWS_FREQ_STRT	PWS FREQ START STEP										○	
PWA	12	N/A	421	B0-8		PWA_PWS_FREQ_STEP	PWS FREQ STEP NUMBER										○	
PWA	12	N/A	422	B0-8		PWA_PWS_CH_NUM	PWS DATA CH NUMBER										○	
PWA	12	N/A	424	B0-8		PWA_PWS_EDIT_PARA	PWS SPW TRIGGER LEVEL										○	
PWA	12	N/A	425	B3-13		PWA_PWS_SS_PC	PWS SWEEP START PC										○	
PWA	12	N/A	427	B3-13		PWA_PWS_RD_PC	PWS FIFO READ PC										○	
PWA	12	N/A	429	B0-24		PWA_PWS_RD_TI	PWS FIFO READ TI										○	
PWA	12	07:00	434	B3-13		PWA_PWS_MC_PC	PWS MODE CHANGE PC										○	
PWA	12	07:01	432	B0-24		PWA_PWS_MC_TI	PWS MODE CHANGE TI										○	
PWA	12	07:05	433	B0-8		PWA_VCOM_COUNT	VALID COMMAND COUNTER										○	
PWA	12	07:06	434	B0-8		PWA_ICOM_COUNT	INVALID COMMAND COUNTER										○	
PWA	12	07:07	435	B0-8		PWA_LOOP_TIME	LOOP TIME MONITOR	msec							1	0	○	
PWA	12	N/A	20	B0-8		PWA_WNT1_LEN/W	WANT1 LENGTH MONITOR	m							0.102	0	○	
PWA	12	N/A	21	B0-8		PWA_WNT2_LEN/W	WANT2 LENGTH MONITOR	m							0.102	0	○	
PWA	12	N/A	22	B0-8		PWA_WNT3_LEN/W	WANT3 LENGTH MONITOR	m							0.102	0	○	
PWA	12	N/A	23	B0-8		PWA_WNT4_LEN/W	WANT4 LENGTH MONITOR	m							0.102	0	○	
PWA	12	N/A	24	B0-8		PWA_WNT1_VIB_EL/W	WANT1 VIBRATION ANGLE (ELEVATION)	deg							-0.0314	4	○	
PWA	12	N/A	25	B0-8		PWA_WNT1_VIB_AZ/W	WANT1 VIBRATION ANGLE (AZIMUTH)	deg							0.0314	-4	○	
PWA	12	N/A	26	B0-8		PWA_WNT2_VIB_EL/W	WANT2 VIBRATION ANGLE (ELEVATION)	deg							-0.0314	4	○	
PWA	12	N/A	27	B0-8		PWA_WNT2_VIB_AZ/W	WANT2 VIBRATION ANGLE (AZIMUTH)	deg							0.0314	-4	○	
PWA	12	N/A	28	B0-8		PWA_WNT3_VIB_EL/W	WANT3 VIBRATION ANGLE (ELEVATION)	deg							-0.0314	4	○	

Table B-3 Analog Data List (26/30)

S/S NAME	APID	2nd Header	WORD	BIT	ADRS (HEX)	SYMBOL	ITEM	UNIT	RANGE MIN	RANGE MAX	y=ax**5+bx**4+cx**3+dx**2+ex+f a	b	c	d	e	f	Inv. Cond.	Sub. Cond.
PWA	12	N/A	29	B0-8		PWA_WNT3_VIB_AZ/W	WANT3 VIBRATION ANGLE (AZIMUTH)	deg							0.0314	-4	○	
PWA	12	N/A	30	B0-8		PWA_WNT4_VIB_EL/W	WANT4 VIBRATION ANGLE (ELEVATION)	deg							-0.0314	4	○	
PWA	12	N/A	31	B0-8		PWA_WNT4_VIB_AZ/W	WANT4 VIBRATION ANGLE (AZIMUTH)	deg							0.0314	-4	○	
PWA	12	N/A	32	B0-8		PWA_WNT1_SPD	WANT1 EXTENSION SPEED (every count up)	sec							0.125	0	○	
PWA	12	N/A	33	B0-8		PWA_WNT2_SPD	WANT2 EXTENSION SPEED (every count up)	sec							0.125	0	○	
PWA	12	N/A	34	B0-8		PWA_WNT3_SPD	WANT3 EXTENSION SPEED (every count up)	sec							0.125	0	○	
PWA	12	N/A	35	B0-8		PWA_WNT4_SPD	WANT4 EXTENSION SPEED (every count up)	sec							0.125	0	○	
PWA	12	N/A	36	B0-8		PWA_WNT_ERR_1/3	WANT1/3 ERROR MONITOR								1	0	○	
PWA	12	N/A	37	B0-8		PWA_WNT_ERR_2/4	WANT2/4 ERROR MONITOR								1	0	○	
PWA	12	N/A	42	B0-8		PWA_WNT_M	WANT SEL OFF COUNTER								1	0	○	
PWA	1	N/A	135	B4-4	F802	PWA_LFA_BANK_SET											○	○
PWA	1	N/A	138	B0-8	F805	PWA_LFA_BIAS_SET											○	○
PWA	12	03:01	28	B2-5		PWA_LFA_OFA_AGC_TM	LFA OFA AGC TIME										○	
PWA	12	07:02	28	B2-5		PWA_LFA_M_ML_AGC_TM	LFA WFC-M AGC TIME (M-L)										○	
PWA	12	07:06	28	B2-5		PWA_LFA_M_HM_AGC_TM	LFA WFC-M AGC TIME (H-M)										○	
PWA	12	03:03	28	B2-5		PWA_LFA_WFCD_AGC_TM	LFA WFC-D AGC TIME										○	
PWA	12	1F:04	28	B0-8		PWA_LFA_OFA_AGC_MD	LFA OFA AGC MODE										○	
PWA	12	3F:00	28	B0-8		PWA_LFA_M_ML_AGC_MD	LFA WFC-M AGC MODE (M-L)										○	
PWA	12	3F:20	28	B0-8		PWA_LFA_M_HM_AGC_MD	LFA WFC-M AGC MODE (H-M)										○	
PWA	12	3F:18	28	B0-8		PWA_LFA_WFCD_AGC_MD	LFA WFC-D AGC MODE										○	
PWA	12	3F:38	28	B0-8		PWA_LFA_WFCM_OFFSET	LFA WFC-M OFFSET										○	
PWA	12	03:00	30	B0-11		PWA_LFA_OFA_TIME	LFA OFA OBSERVATION TIME(TI)										○	
PWA	12	03:00	31	B3-13		PWA_LFA_OFA_PC	LFA OFA OBSERVATION TIME(PC)										○	
PWA	12	03:01	30	B0-11		PWA_LFA_WFCM_TIME	LFA WFC-M OBSERVATION TIME(TI)										○	
PWA	12	03:01	31	B3-13		PWA_LFA_WFCM_PC	LFA WFC-M OBSERVATION TIME(PC)										○	
PWA	12	03:02	30	B0-11		PWA_LFA_WFCD_TIME	LFA WFC-D OBSERVATION TIME(TI)										○	
PWA	12	03:02	31	B3-13		PWA_LFA_WFCD_PC	LFA WFC-D OBSERVATION TIME(PC)										○	
PWA	12	07:03	30	B0-24		PWA_LFA_WFCM_START	LFA WFC-M RECORD START TIME(TI)										○	
PWA	12	07:07	30	B0-24		PWA_LFA_WFCH_START	LFA WFC-H RECORD START TIME(TI)										○	
PWA	12	07:00	33	B0-4		PWA_LFA_MEM_BANK_NO	LFA MEMORY BANK NUMBER										○	
PWA	12	07:01	33	B0-4		PWA_LFA_MEM_WR_BANK	LFA WRITING MEMORY BANK NUMBER										○	
PWA	12	07:01	33	B4-4		PWA_LFA_MEM_RD_BANK	LFA READING MEMORY BANK NUMBER										○	
PWA	12	07:02	33	B0-8		PWA_LFA_MEM_WR_ADR	LFA WRITING MEMORY BANK ADDRESS										○	
PWA	12	07:03	33	B0-8		PWA_LFA_MEM_RD_ADR	LFA READING MEMORY BANK ADDRESS										○	
PWA	12	07:04	33	B0-4		PWA_LFA_WR_STRT_BNK	LFA WRITE START MEMORY BANK NUMBER										○	
PWA	12	07:04	33	B4-4		PWA_LFA_WR_STOP_BNK	LFA WRITE STOP MEMORY BANK NUMBER										○	
PWA	12	07:05	33	B0-8		PWA_LFA_BANK_TIME0	LFA MEMORY BANK FIRST TIME(TI0)										○	
PWA	12	07:06	33	B0-8		PWA_LFA_BANK_TIME1	LFA MEMORY BANK FIRST TIME(TI1)										○	

Table B-3 Analog Data List (27/30)

S/S NAME	APID	2nd Header	WORD	BIT	ADRS (HEX)	SYMBOL	ITEM	UNIT	RANGE MIN	RANGE MAX	y=ax**5+bx**4+cx**3+dx**2+ex+f a	b	c	d	e	f	Inv. Cond.	Sub. Cond.
PWA	12	07:07	33	B0-8		PWA_LFA_BANK_TIME2	LFA MEMORY BANK FIRST TIME(T12)										○	
PWA	12	N/A	35	B0-8		PWA_LFA_REPRO_PLAN	LFA WFC-M MEMORY REPRODUCE PLAN										○	
MPM	1		373	B0-8	8010	MPM_MGF_E_T	MGF_E_TEMPERATURE	C	-62.15	78.35					0.551	-62.154	○	
MPM	1		374	B0-8	8011	MPM_MGF_S_T	MGF_S_TEMPERATURE	C	-64	53.3					0.46	-64	○	
MPM	1		375	B0-8	8012	MPM_PET_VF	PET_VF	V	0.02	5.09					0.02	0.024	○	
MPM	1		376	B0-8	8013	MPM_MST_T	MST_TEMPERATURE	C	-101	154					1	-101	○	
MPM	1		377	B0-8	8014	MPM_UVS_G_T	UVS_G_TEMPERATURE	C	-84.63	70.29					-0.608	70.286	○	
MPM	1		378	B0-8	8015	MPM_UVS_PM_H_T	UVS_PM_H_CELL_TEMPERATURE	C	-83.47	70.39					-0.603	70.391	○	
MPM	1		379	B0-8	8016	MPM_UVS_PM_D_T	UVS_PM_D_CELL_TEMPERATURE	C	-83.86	69.73					-0.602	69.728	○	
MPM	1		380	B0-8	8017	MPM_UVS_PM_T	UVS_PM_TEMPERATURE	C	-83.75	70.01					-0.603	70.015	○	
MPM	1		381	B0-8	8018	MPM_UVS_G_MCP_HV	UVS_G_MCP_HV	V	-31.96	5153.98					20.337	-31.958	○	
MPM	1		382	B0-8	8019	MPM_UVS_PM_HV	UVS_PM_HV	V	10.4	5075.67					19.864	10.405	○	
MPM	1		383	B0-8	801A	MPM_UVS_D_FIL_I	UVS_D_FILAMENT_CURRENT	MA	-0.54	260.02					1.02	-0.535	○	
MPM	1		384	B0-8	801B	MPM_UVS_H_FIL_I	UVS_H_FILAMENT_CURRENT	MA	-2.27	261.46					1.03	-2.27	○	
MPM	1		385	B0-8	801C	MPM_+5V	+5V	V	0.16	10.2					0.039	0.159	○	
MPM	1		386	B0-8	801D	MPM_+12V	+12V	V	-0.14	24.63					0.097	-0.14	○	
MPM	1		387	B0-8	801E	MPM_-12	-12V	V	-33.51	-0.34					-0.13	-0.336	○	
MPM	1		388	B0-8	801F	MPM_+29	+29V	V	-0.3	59.77					0.236	-0.3	○	
MPM	1		123	B0-8	F800	MPM_MST_STP_MTR_TMP	MST_STOP_MOTOR_TEMPERATURE_SET	C	-101	154					1	-101	○	○
MPM	1		124	B0-7	F801	MPM_UVS_BOS_LEVEL	UVS_BOS_LEVEL		0	255					2	0	○	○
MPM	1		124	B1-6	F801	MPM_MST_REEL_COUNT	MST_REEL_COUNT		0	64					1	0	○	○
MPM	1		124	B0-7	F801	MPM_MST_STP_MTR_CUR	MST_STOP_MOTOR_CURRENT_SET	MA	-256	254					2	-256	○	○
MPM	1		125	B3-5	F802	MPM_UVS_G_HV_LEVEL	UVS_G_HV_LEVEL		0	31					1	0	○	○
MPM	1		125	B3-5	F802	MPM_UVS_PM_HV_LEVEL	UVS_PM_HV_LEVEL		0	31					1	0	○	○
MPM	1		126	B0-8	F803	MPM_MST_STP_RC_SET	MST_STOP_REEL_COUNT_SET		0	255					1	0	○	○
MIC	1	N/A	389	B0-8	8010	MIC_DSP+5V	DSP + 5V VOLTAGE	V							0.04016	0	○	
MIC	1	N/A	390	B0-8	8011	MIC_DSP+15V	DSP +15V VOLTAGE	V							0.08051	0	○	
MIC	1	N/A	391	B0-8	8012	MIC_DSP-15V	DSP -15V VOLTAGE	V							0.08051	0	○	
MIC	1	N/A	392	B0-8	8013	MIC_ASP+5V	ASP + 5V VOLTAGE	V							0.04016	0	○	
MIC	1	N/A	393	B0-8	8014	MIC_ASP+15V	ASP +15V VOLTAGE	V							0.1251	0	○	
MIC	1	N/A	394	B0-8	8015	MIC_ASP-15V	ASP -15V VOLTAGE	V							0.1266	0	○	
MIC	1	N/A	395	B0-8	8018	MIC_LENS-T	MIC LENS TEMPERATURE	C						0.00027	0.2973	-44.951	○	
MIC	1	N/A	396	B0-8	8019	MIC_CCD-T	MIC CCD TEMPERATURE	C						0.00027	0.2973	-44.951	○	
MIC	1	N/A	397	B0-8	801A	MIC_DRV-T	MIC DRIVER TEMPERATURE	C						0.00027	0.2973	-44.951	○	

Table B-3 Analog Data List (28/30)

S/S NAME	APID	2nd Header	WORD	BIT	ADRS (HEX)	SYMBOL	ITEM	UNIT	RANGE MIN	RANGE MAX	y=ax**5+bx**4+cx**3+dx**2+ex+f a	b	c	d	e	f	Inv. Cond.	Sub. Cond.
MIC	1	N/A	398	B0-8	801B	MIC_BASE-T	MIC BASE TEMPERATURE	C						0.00027	0.2973	-44.951	○	
MIC	1	N/A	399	B0-8	801C	MIC_FPGA-T	MIC FPGA TEMPERATURE	C						0.00027	0.2973	-44.951	○	
MIC	1	N/A	116	B0-8	F802	MIC_MEM_WR_POINTER	MEMORY WRITE POINTER										○	
MIC	1	N/A	117	B0-8	F803	MIC_MEM_RD_POINTER	MEMORY READ POINTER										○	
MIC	1	N/A	118	B0-8	F804	MIC_CMP_POINTER	COMPRESSION WRITE POINTER										○	
MIC	13	10	6	B0-8	FA02	MIC_LAST_DC	LAST DC										○	
MIC	13	10	8	B0-4	FA04	MIC_IMG_AREA1	ELEVATION SIZE OF PICTURE	pixels							256	0	○	
MIC	13	10	8	B4-4	FA04	MIC_IMG_AREA2	AZIMUTH SIZE OF PICTURE	lines							256	0	○	
MIC	13	10	9	B1-7	FA05	MIC_START_ANGLE	START ANGLE OF IMAGING	pixels							128	1	○	
MIC	13	10	10	B3-5	FA06	MIC_START_PIXEL	START PIXEL OF IMAGING	lines							128	1	○	
MIC	13	10	12	B1-7	FA08	MIC_SEARCH_AREA1	START SEARCH ANGLE IN AUTO-MODE	pixels							128	1	○	
MIC	13	10	13	B1-7	FA09	MIC_SEARCH_AREA2	STOP SEARCH ANGLE IN AUTO-MODE	pixels							128	1	○	
MIC	13	10	14	B3-5	FA0A	MIC_SEARCH_AREA3	START SEARCH PIXEL IN AUTO-MODE	lines							128	1	○	
MIC	13	10	15	B3-5	FA0B	MIC_SEARCH_AREA4	STOP SEARCH PIXEL IN AUTO-MODE	lines							128	1	○	
MIC	13	10	16	B0-8	FA0C	MIC_SRAM_ADD_COUT_L	SRAM ADDRESS(L)										○	
MIC	13	10	17	B0-8	FA13	MIC_SRAM_ADD_COUT_M	SRAM ADDRESS(M)										○	
MIC	13	10	18	B4-4	FA0E	MIC_SRAM_ADD_COUT_H	SRAM ADDRESS(H)										○	
MIC	13	10	19	B4-4	FA0F	MIC_ADD_COMV_REG	ADDRESS COMVERTING REGISTER										○	
MIC	13	10	24	B0-8	FA14	MIC_COFO_HSIZE	COFO REGISTER (HSIZE)										○	
MIC	13	10	26	B0-8	FA16	MIC_COFO_VSIZE	COFO REGISTER (VSIZE)										○	
MIC	13	10	28	B0-8	FA18	MIC_COFO_GOB_LENGTH	COFO REGISTER (GOB LENGTH)										○	
MIC	13	10	30	B0-8	FA1A	MIC_COFO_AUTTST_SIG	COFO REGISTER (AUTO-TEST SIGNATURE)										○	
MIC	13	10	38	B0-8	FA22	MIC_DMAC_CONT_REG0	DMAC REGISTER (CH0 CURRENT ADDRESS)										○	
MIC	13	10	39	B0-8	FA23	MIC_DMAC_CONT_REG1	DMAC REGISTER (CH0 CURRENT WORD COUNT)										○	
MIC	13	10	40	B0-8	FA24	MIC_DMAC_CONT_REG2	DMAC REGISTER (CH1 CURRENT ADDRESS)										○	
MIC	13	10	41	B0-8	FA25	MIC_DMAC_CONT_REG3	DMAC REGISTER (CH1 CURRENT WORD COUNT)										○	
MIC	13	10	42	B0-8	FA26	MIC_DMAC_CONT_REG4	DMAC REGISTER (CH2 CURRENT ADDRESS)										○	
MIC	13	10	43	B0-8	FA27	MIC_DMAC_CONT_REG5	DMAC REGISTER (CH2 CURRENT WORD COUNT)										○	
MIC	13	10	44	B0-8	FA28	MIC_DMAC_CONT_REG6	DMAC REGISTER (CH3 CURRENT ADDRESS)										○	
MIC	13	10	45	B0-8	FA29	MIC_DMAC_CONT_REG7	DMAC REGISTER (CH3 CURRENT WORD COUNT)										○	
MIC	13	10	46	B0-8	FA2A	MIC_DMAC_CONT_REG8	DMAC REGISTER (STATUS REGISTER)										○	
MIC	13	10	47	B0-8	FA2B	MIC_DMAC_CONT_REG9	DMAC REGISTER (REQUEST REGISTER)										○	
MIC	13	10	48	B0-8	FA2C	MIC_DMAC_CONT_REG10	DAMC REGISTER (COMMAND REGISTER)										○	
MIC	13	10	49	B0-8	FA2D	MIC_DMAC_CONT_REG11	DMAC REGISTER (MODE REGISTER)										○	
MIC	13	10	50	B0-8	FA2E	MIC_DMAC_CONT_REG12	DMAC REGISTER (SET FIRST/LAST F/F)										○	
MIC	13	10	51	B0-8	FA2F	MIC_DMAC_CONT_REG13	DMAC REGISTER (TEMPORARY REGISTER)										○	
MIC	13	10	52	B0-8	FA30	MIC_DMAC_CONT_REG14	DMAC REGISTER (MODE REG. COUNTER)										○	
MIC	13	10	53	B0-8	FA31	MIC_DMAC_CONT_REG15	DMAC REGISTER (ALL MASK BITS)										○	

Table B-3 Analog Data List (29/30)

S/S NAME	APID	2nd Header	WORD	BIT	ADRS (HEX)	SYMBOL	ITEM	UNIT	RANGE MIN	RANGE MAX	y=ax**5+bx**4+cx**3+dx**2+ex+f a	b	c	d	e	f	Inv. Cond.	Sub. Cond.
MIC	13	10	70	B1-7	FA42	MIC_NUM_MODE_SET	NUMBER OF MODE SET COMMAND										○	
MIC	13	10	71	B3-5	FA43	MIC_FORMAT_NO	FORMAT NUMBER										○	
MIC	13	10	72	B4-4	FA44	MIC_BIT_RATE_TLM	BIT RATE TELEMETRY										○	
MIC	13	10	73	B0-4	FA45	MIC_BIT_RATE_XBAND	BIT RATE X-BAND										○	
MIC	13	10	73	B4-4	FA45	MIC_BIT_RATE_SBAND	BIT RATE S-BAND										○	
MIC	13	10	74	B0-8	FA46	MIC_TRACK_PRAM0	TRACKING PARAMETER ϕo(L)										○	
MIC	13	10	75	B0-8	FA47	MIC_TRACK_PRAM1	TRACKING PARAMETER ϕo(H)										○	
MIC	13	10	76	B0-8	FA48	MIC_TRACK_PRAM2	TRACKING PARAMETER μo(L)										○	
MIC	13	10	77	B0-8	FA49	MIC_TRACK_PRAM3	TRACKING PARAMETER μo(H)										○	
MIC	13	10	78	B0-8	FA4A	MIC_TRACK_PRAM4	TRACKING PARAMETER θo(L)										○	
MIC	13	10	79	B0-8	FA4B	MIC_TRACK_PRAM5	TAACKING PARAMETER θo(H)										○	
MIC	13	10	80	B0-8	FA4C	MIC_TRACK_PRAM6	TRACKING PARAMETER ϕbo(L)										○	
MIC	13	10	81	B0-8	FA4D	MIC_TRACK_PRAM7	TRACKING PARAMETER ϕbo(H)										○	
MIC	13	10	82	B0-8	FA4E	MIC_TRACK_PRAM8	TRACKING PARAMETER Xo(L)										○	
MIC	13	10	83	B0-8	FA4F	MIC_TRACK_PRAM9	TRACKING PARAMETER Xo(H)										○	
MIC	13	10	84	B0-8	FA50	MIC_TRACK_PRAM10	TRACKING PARAMETER Vref(L)										○	
MIC	13	10	85	B0-8	FA51	MIC_TRACK_PRAM11	TRACKING PARAMETER Vref(H)										○	
MIC	13	10	86	B0-8	FA52	MIC_TRACK_PRAM12	TRACKING PARAMETER Sx(L)										○	
MIC	13	10	87	B0-8	FA53	MIC_TRACK_PRAM13	TRACKING PARAMETER Sx(H)										○	
MIC	13	10	88	B0-8	FA54	MIC_TRACK_PRAM14	TRACKING PARAMETER Sy(L)										○	
MIC	13	10	89	B0-8	FA55	MIC_TRACK_PRAM15	TRACKING PARAMETER Sy(H)										○	
MIC	13	10	90	B0-8	FA56	MIC_TRACK_PRAM16	TRACKING PARAMETER Sz(L)										○	
MIC	13	10	91	B0-8	FA57	MIC_TRACK_PRAM17	TRACKING PARAMETER Sz(H)										○	
MIC	13	10	92	B0-8	FA58	MIC_TRACK_PRAM18	TRACKING PARAMETER R(L)										○	
MIC	13	10	93	B0-8	FA59	MIC_TRACK_PRAM19	TRACKING PARAMETER R(H)										○	
MIC	13	10	94	B0-8	FA5A	MIC_TRACK_PRAM20	TRACKING PARAMETER T(L)										○	
MIC	13	10	95	B0-8	FA5B	MIC_TRACK_PRAM21	TRACKING PARAMETER T(H)											
IMI	1		405	B0-8	F8F0	IMI_OFF_TEMP	Temperature at PIM=on & CPU=off	C	-273	235					1.994	-273	○	
IMI	1		406	B0-8	F8F1	IMI_BIAS_1_HV	Bias-1 HV monitor	Volt	0	5					0.01953	0	○	
IMI	1		407	B0-8	F8F2	IMI_BIAS_2_HV	Bias-2 HV monitor	Volt	0	5					0.01953	0	○	
IMI	1		408	B0-8	F8F3	IMI_POST_ACC_HV	Post-Acceleration HV monitor	Volt	0	5					0.01953	0	○	
IMI	1		409	B0-8	F8F4	IMI_DEF_HV	Deflection HV monitor	Volt	0	5					0.01953	0	○	
IMI	1		410	B0-8	F8F5	IMI_TEMP_1	Temperature-1 monitor	C	-50	157					0.8138	-50	○	
IMI	1		411	B0-8	F8F6	IMI_TEMP_2	Temperature-2 monitor	C	-50	157					0.8138	-50	○	
IMI	1		412	B0-8	F8F7	IMI_+28I_CURRENT	Current Monitor at +28 V (Bus) line	mA	-14	700					2.8	-14	○	
IMI	1		413	B0-8	F8F8	IMI_INT_WATCH	Internal Watch (2-digit HEX)		0	255							○	

Table B-3 Analog Data List (30/30)

S/S NAME	APID	2nd Header	WORD	BIT	ADRS (HEX)	SYMBOL	ITEM	UNIT	RANGE MIN	RANGE MAX	y=ax**5+bx**4+cx**3+dx**2+ex+f a	b	c	d	e	f	Inv. Cond.	Sub. Cond.
IMI	1		414	B1-7	F8F9	IMI_DATA_RDCTN_MODE	Data-reduction mode (3-digit decimal)		0	127							○	
IMI	1		415	B0-8	F8FA	IMI_CMD_DC_COUNTER	Counter of DC-commands (3-digit decimal)		0	255							○	
IMI	1		416	B0-8	F8FB	IMI_LAST_CMD_DC	Last DC-command number (2-digit HEX)		0	255							○	
IMI	1		121	B0-8	F802	IMI_FIFO_FILLING	2-digit HEX		0	255							○	
MDC	1	N/A	417	B0-8	F802	MDC_HV+200V	HIGH_VOLTAGE+200V	V	0	347					1.36	0	○	
MDC	1	N/A	418	B0-8	F803	MDC_HV-200V	HIGH_VOLTAGE-200V	V	0	347					-1.36	0	○	
MDC	1	N/A	419	B0-8	F804	MDC_TEMP	TEMPERATURE_ELECTRONICS	C	-347	0					1.628	-279	○	
MDC	1	N/A	420	B0-8	F805	MDC_TC_CNT	COMMAND_STATUS_COUNT		-279.4	135.7							○	
MDC	1	N/A	421	B0-8	F806	MDC_IMP_CNT	IMPACT_COUNT		0	255							○	
MDC	1	N/A	422	B0-8	F807	MDC_TRIGGER	TRIGGER_MODE		0	255							○	
MDC	1	N/A	423	B0-8	F808	MDC_NS_CNT1	NOISE_COUNT1		0	255							○	
MDC	1	N/A	424	B0-8	F809	MDC_NS_CNT2	NOISE_COUNT2		0	255							○	
MDC	1	N/A	425	B0-8	F80A	MDC_EVENT_CNT	EVENT_COUNT		0	255							○	
TPA	1	N/A	401	B0-8	F804	TPA_PCU_TEMP	TPA_PCU_TEMPERATURE	C							1.94	-273	○	
TPA	1	N/A	402	B0-8	F805	TPA_SENSOR_TEMP	TPA_SENSOR_TEMPERATURE	C							1.94	-273	○	
TPA	1	N/A	403	B0-8	F806	TPA_CRADLE_TEMP	TPA_CRADLE_TEMPERATURE	C							1.94	-273	○	
TPA	1	N/A	404	B0-8	F807	TPA_BOOM_C_RES	BOOM_CRADLE_RESISTANCE	OHM							-53	13515	○	
	5	N/A	236	B0-8	801A	TPA_CURRENT	TPA_CURRENT	A							0.0196	0	○	
NMS	1	N/A	426	B0-8	F803	NMS_RF-T	RF Temperature	C	-273	400		#######	#######	#######	4.7898	-3125	○	
NMS	1	N/A	427	B0-8	F804	NMS_EM-A	EM Monitor Current	uA	-4.18	4.13					#######	-68.428	○	
NMS	1	N/A	428	B0-8	F805	NMS_PS-T	LVPS Temperature	C	-273	400		#######	#######	#######	4.4047	-2954.6	○	
NMS	1	N/A	429	B0-8	F806	NMS_FB-T	Filament Bias Temperature	C	-273	400		#######	#######	#######	4.7898	-3125	○	
NMS	1	N/A	430	B0-8	F807	NMS_HVB-V	HV Bias Voltage	V	-42.56	42.11					0.0399	-5.1066	○	
NMS	1	N/A	431	B0-8	F808	NMS_EVC-V	Electron Voltage	V	-5.128	5.08					0.0399	-5.1066	○	
NMS	1	N/A	432	B0-8	F809	NMS_EMCTR-V	EM Control Voltage	V	-5.128	5.08					0.0399	-5.1066	○	
NMS	1	N/A	433	B0-8	F80A	NMS_HVR	HV Regulator Voltage	V	-276.9	273.9					#######	-313.48	○	
NMS	1	N/A	434	B0-8	F80B	NMS_+5V	+5V	V	-5.34	5.28					#######	-5.3109	○	
NMS	1	N/A	435	B0-8	F80C	NMS_I	Current	A	-1.59	1.573					#######	-1.9692	○	
NMS	1	N/A	131	B4-3	F802	NMS_COMMAND_COUNTER	DC Command Counter										○	

Table C-1 DC Command List (1/23)

DHU	*IC-Code : 01*

XY Code	Command Name	Function
20	DHU_BUS_ACC_ENA	BUS_ACCESS_ENABLE
21	DHU_BUS_ACC_DIS	BUS_ACCESS_DISABLE
25	DHU_TLM_ROM_A_ON	TLM-ROM_A_ON
26	DHU_TLM_ROM_B_ON	TLM-ROM_B_ON
27	DHU_TLM_ROM_SW_ENA	TLM_ROM_SWITCH_ENABLE
28	DHU_TLM_ROM_SW_DIS	TLM_ROM_SWITCH_DISABLE
29	DHU_REP_OFF	REPRODUCE_OFF
2A	DHU_REC_ON	RECORD_DATA_OUTPUT_ON
2B	DHU_REC_OFF	RECORD_DATA_OUTPUT_OFF
2E	DHU_S_REP_ON	S-TLM_REP_ON/X-TLM_REP_OFF
32	DHU_X_REP_ON	X-TLM_REP_ON/S-TLM_REP_OFF
40	DHU_BUS_A_ON	CONTROL_BUS_A_ON_/B_OFF
41	DHU_BUS_B_ON	CONTROL_BUS_B_ON_/A_OFF
42	DHU_CLK-A_STOP	CONTROL_BUS_MASTER_CLOCK-A_STOP
43	DHU_CLK-B_STOP	CONTROL_BUS_MASTER_CLOCK-B_STOP
44	DHU_CLK-A_OUT	CONTROL_BUS_MASTER_CLOCK-A_ON
45	DHU_CLK-B_OUT	CONTROL_BUS_MASTER_CLOCK-B_ON
46	DHU_R-BUS_A_ENA	RESPONSE-BUS_A_ENABLE
47	DHU_R-BUS_A_DIS	RESPONSE-BUS_A_DISABLE
48	DHU_R-BUS_B_ENA	RESPONSE-BUS_B_ENABLE
49	DHU_R-BUS_B_DIS	RESPONSE-BUS_B_DISABLE
5E	DHU_ECC_1SHOT_ERR	ECC DEBUG COMMAND
5F	DHU_ECC_FIX_ERR	ECC DEBUG COMMAND
60	DHU_BFM_ENA	BFM_ACCESS_ENABLE
61	DHU_BFM_DIS	BFM_ACCESS_DISABLE
65	DHU_BFM-ROM_ECC_ENA	BFM_ROM_ECC_ENABLE
66	DHU_BFM-ROM_ECC_DIS	BFM_ROM_ECC_DISABLE
67	DHU_BFM-ROM_2B_RST	BFM_ROM_2BIT_ERROR_FLAG_RESET
70	DHU_PRG_RUN	DHU-PROGRAM RUN
74	DHU_PRG_AP_CHK	DHU-PROGRAM APPLICATION CHECK
75	DHU_PRG_OS_CHK	DHU-PROGRAM OS CHECK
7F	DHU_DBG_RUN	DEBUGER RUN
80	DHU_USR-PRG_WRT_ENA	USER PROGRAM RAM WRITE ENABLE
81	DHU_USR-PRG_WRT_DIS	USER PROGRAM RAM WRITE DISABLE
90	DHU_RQOG_ENA	REQUEST OG ENABLE
91	DHU_RQOG_DIS	REQUEST OG DISABLE
A0	DHU_TI_CMD_ENA	TIME COMMAND ENABLE
A1	DHU_TI_CMD_DIS	TIME COMMAND DISABLE
A2	DHU_TI_CMD_CANCEL	TIME COMMAND CANSEL
A3	DHU_TI_DLVRY	TIME INDICATOR BROAD CASTING
B0	DHU_OP_ENA	OP CONTROL FUNCTION ENABLE
B1	DHU_OP_DIS	OP CONTROL FUNCTION DISABLE

Table C-1 DC Command List (2/23)

DHU	*IC-Code : 01*

XY Code	Command Name	Function
B2	DHU_OP_START	OP CONTROL FUNCTION START
B3	DHU_OP_STOP	OP CONTROL FUNCTION STOP
B4	DHU_OP_RAM_CLR	OP RAM ALL CLEAR
B5	DHU_OPOG_COPY	OP/OG COPY
B6	DHU_ROG_ENA	ROG CONTROL FUNCTION ENABLE
B7	DHU_ROG_DIS	ROG CONTROL FUNCTION DISABLE
C0	DHU_AT_ENA	AUTO CONTROL FUNCTION ENABLE
C1	DHU_AT_DIS	AUTO CONTROL FUNCTION DISABLE
C2	DHU_UVC_ENA	UVC ENABLE
C3	DHU_UVC_DIS	UVC DISABLE
C4	DHU_SH_ENA	SH TIMMER CONTROL ENABLE
C5	DHU_SH_DIS	SH TIMMER CONTROL DISABLE
C6	DHU_SH_RST	SH TIMMER CONTROL RESET
CE	DHU_ATOG_RST	ATOG_EXECUTION_FLAG_RESET
E0	DHU_CPU_1_ON_ENA	CPU 1 ON ENABLE
E1	DHU_CPU_1_ON	CPU 1 ON
E2	DHU_CPU_1_OFF_ENA	CPU 1 OFF ENABLE
E3	DHU_CPU_1_OFF	CPU 1 OFF
E4	DHU_CPU_2_ON_ENA	CPU 2 ON ENABLE
E5	DHU_CPU_2_ON	CPU 2 ON
E6	DHU_CPU_2_OFF_ENA	CPU 2 OFF ENABLE
E7	DHU_CPU_2_OFF	CPU 2 OFF
E8	DHU_CPU_RST_ENA	CPU RESET ENABLE
E9	DHU_CPU_RST	CPU RESET
EC	DHU_RD_I/F_ON_ENA	RD I/F ON ENABLE
ED	DHU_RD_I/F_ON	RD ON
EE	DHU_RD_I/F_OFF_ENA	RD I/F OFF ENABLE
EF	DHU_RD_I/F_OFF	RD OFF
F0	DHU_WDT_ENA	WATCHDOG TIMER ECC ENABLE
F1	DHU_WDT_DIS	WATCHDOG TIMER ECC DISABLE
F2	DHU_LCL-MEM_ECC_ENA	DHU-PROGRAM ROM ECC ENABLE
F3	DHU_LCL-MEM_ECC_DIS	DHU-PROGRAM ROM ECC DISABLE
F4	DHU_CMN-RAM_ECC_ENA	COMMON_RAM_ECC_ENABLE
F5	DHU_CMN-RAM_ECC_DIS	COMMON_RAM_ECC_DISABLE
F6	DHU_TLM_ROM_ECC_ENA	TLM_FORMAT_ROM_ECC_ENABLE
F7	DHU_TLM_ROM_ECC_DIS	TLM_FORMAT_ROM_ECC_DISABLE
F8	DHU_AP-ROM_2B_RST	APPLICATION_ROM_2BIT_ERROR_RESET
F9	DHU_TLM-ROM_2B_RST	TLM_FORMAT_ROM_2BIT_ERROR_RESET
FA	DHU_BUS_CHK_ENA	BUS_CHECK_ENABLE
FB	DHU_BUS_CHK_DIS	BUS_CHECK_DISABLE
FC	DHU_CONT_ENA	RE-BOOT_CONTINUE_SEQ_ENABLE
FD	DHU_CONT_DIS	RE-BOOT_CONTINUE_SEQ_DISABLE

Table C-1 DC Command List (3/23)

AOCE	*IC-Code : 02*

XY Code	Command Name	Function
01	AOCE_ON	AOCE_ON
05	AOCE_REQ_ACK	USER_REQUEST_ACK
25	AOCE_OFF_EN	AOCE_OFF_ENABLE
26	AOCE_OFF	AOCE_OFF
27	AOCE_RST_EN	AOCE_RESET_ENABLE
28	AOCE_RST	AOCE_RESET
29	AOCE_BC_EXE	BC_EXECUTE
2A	AOCE_BC_DIS	BC_DISABLE
2B	AOCE_EN_CMD_RST	ENABLE_CMD_RESET
2C	AOCE_DE_EN	DATA_ERROR_ENABLE
2D	AOCE_DE_DS	DATA_ERROR_DISABLE
2E	AOCE_EE_EN	EXTERNAL_ERROR_ENABLE
2F	AOCE_EE_DS	EXTERNAL_ERROR_DISABLE
30	AOCE_MRM-A_ON	MRM-A_ON
31	AOCE_MRM-B_ON	MRM-B_ON
32	AOCE_MRM_OFF_EN	MRM_OFF_ENABLE
33	AOCE_MRM-A_OFF	MRM-A_OFF
34	AOCE_MRM-B_OFF	MRM-B_OFF
A0	AOCE_CPU-A_ON	CPU-A_ON_
A1	AOCE_CPU-B_ON	CPU-B_ON
A2	AOCE_CPU_OFF_EN	CPU_OFF_ENABLE
A3	AOCE_CPU-A_OFF	CPU-A_POWER_OFF
A4	AOCE_CPU-B_OFF	CPU-B_POWER_OFF_
A5	AOCE_MANUAL_MODE	MRM_MANUAL_MODE
A6	AOCE_SIMPLX_MODE	MRM_SIMPLEX_MODE
A7	AOCE_DUPLEX_MODE	MRM_DUPLEX_MODE
A8	AOCE_EM-A_SET	ERROR_MARK-A_FLAG_SET
A9	AOCE_EM-A_RESET	ERROR_MARK-A_FLAG_RESET
AA	AOCE_EM-B_SET	ERROR_MARK-B_FLAG_SET
AB	AOCE_EM-B_RESET	ERROR_MARK-B_FLAG_RESET
AC	AOCE_FLG_CLEAR	FLAG_CLEAR
CA	AOCE_AOCI_WDT_EN	AOCI_WDT_ENABLE
CB	AOCE_AOCI_WDT_DS	AOCI_WDT_DISABLE
D0	AOCE_SYNC	SYNCHRONIZATION_FOR_BOTH_OF_CPU
D1	AOCE_NML-A	CPU-A_NORMAL_MODE
D2	AOCE_NML-B	CPU-B_NORMAL_MODE
DB	AOCE_CPU_RAM_CLR	ALL_RAM_CLEAR
DC	AOCE_RAM_CHK_EN	MEMORY_PATROL_ENABLE
70	AOCE_CMD_FLG0_EN	AOCI_PORT-CMD_FLG0_ON
71	AOCE_CMD_FLG1_EN	AOCI_PORT-CMD_FLG1_ON
72	AOCE_CMD_FLG2_EN	AOCI_PORT-CMD_FLG2_ON
73	AOCE_CMD_FLG3_EN	AOCI_PORT-CMD_FLG3_ON

Table C-1 DC Command List (4/23)

AOCE	*IC-Code : 02*

XY Code	Command Name	Function
74	AOCE_CMD_FLG4_EN	AOCI_PORT-CMD_FLG4_ON
75	AOCE_CMD_FLG5_EN	AOCI_PORT-CMD_FLG5_ON
76	AOCE_CMD_FLG6_EN	AOCI_PORT-CMD_FLG6_ON
77	AOCE_CMD_FLG7_EN	AOCI_PORT-CMD_FLG7_ON
78	AOCE_CMD_FLG8_EN	AOCI_PORT-CMD_FLG8_ON
79	AOCE_CMD_FLG9_EN	AOCI_PORT-CMD_FLG9_ON
80	AOCE_CMD_FLG0_DS	AOCI_PORT-CMD_FLG0_OFF
81	AOCE_CMD_FLG1_DS	AOCI_PORT-CMD_FLG1_OFF
82	AOCE_CMD_FLG2_DS	AOCI_PORT-CMD_FLG2_OFF
83	AOCE_CMD_FLG3_DS	AOCI_PORT-CMD_FLG3_OFF
84	AOCE_CMD_FLG4_DS	AOCI_PORT-CMD_FLG4_OFF
85	AOCE_CMD_FLG5_DS	AOCI_PORT-CMD_FLG5_OFF
86	AOCE_CMD_FLG6_DS	AOCI_PORT-CMD_FLG6_OFF
87	AOCE_CMD_FLG7_DS	AOCI_PORT-CMD_FLG7_OFF
88	AOCE_CMD_FLG8_DS	AOCI_PORT-CMD_FLG8_OFF
89	AOCE_CMD_FLG9_DS	AOCI_PORT-CMD_FLG9_OFF
40	AOCE_SSAS-B_ON	SSAS-B_ON
41	AOCE_SSAS-B_OF_EN	SSAS-B_OFF_ENABLE
42	AOCE_SSAS-B_OFF	SSAS-B_OFF
43	AOCE_SSAS-A_ON	SSAS-A_ON
44	AOCE_SSAS-A_OF_EN	SSAS-A_OFF_ENABLE
45	AOCE_SSAS-A_OFF	SSAS-A_OFF
C0	AOCE_SSAS_CAL_EN	SSAS_CAL_EN
C1	AOCE_SSAS_CAL_ON	SSAS_CAL_ON
C2	AOCE_SSAS_CAL_OF	SSAS_CAL_OFF
46	AOCE_SSC_ON	SSC_ON
47	AOCE_SSC_OFF_EN	SSC_OFF_ENABLE
48	AOCE_SSC_OFF	SSC_OFF
49	AOCE_SSC_CAL_ON	SSC_CAL_ON
4A	AOCE_SSC_CAL_OFF	SSC_CAL_OFF
C3	AOCE_SSC_INT_EN	SSC_INTERRUPT_ENABLE
C4	AOCE_SSC_MASK_EN	SSC_MASK_ENABLE
C5	AOCE_SSC_MASK_DS	SSC_MASK_DISABLE
36	AOCE_ACM-A_ON	ACM-A_ON
37	AOCE_ACM-B_ON	ACM-B_ON
38	AOCE_ACM-C_ON	ACM-C_ON
39	AOCE_ACM-D_ON	ACM-D_ON
3A	AOCE_ACM_OFF_EN	ACM_OFF_ENABLE
3B	AOCE_ACM_OFF	ACM_OFF
C8	AOCE_ACM_BIAS_EN	ACM_BIAS_ENABLE
C9	AOCE_ACM_BIAS_DS	ACM_BIAS_DISABLE
3C	AOCE_GRS-A_ON	GRS-A_ON

Table C-1 DC Command List (5/23)

AOCE	*IC-Code : 02*

XY Code	Command Name	Function
3D	AOCE_GRS-B_ON	GRS-B_ON
3E	AOCE_GRS_OFF_EN	GRS_OFF_ENA
3F	AOCE_GRS_OFF	GRS_OFF
50	AOCE_RCSPWR_ON	RCS_DRIVE_POWER_ON
51	AOCE_RCSPWR_OF_EN	RCS_DRIVE_POWER_OFF_ENABLE
52	AOCE_RCSPWR_OFF	RCS_DRIVE_POWER_OFF
53	AOCE_RCS_EN	RCS_ENABLE
E0	AOCE_RCS_GO	RCS_GO
E1	AOCE_RCS_DS	RCS_DS
54	AOCE_RCS_STOP	RCS_STOP
55	AOCE_RCS_PRITY_EN	RCS_PARITY_ENABLE
56	AOCE_RCS_PRITY_DS	RCS_PARITY_DISABLE
57	AOCE_RCS_WDT_EN	RCS_WATCHDOG_TIMER_ENABLE_
58	AOCE_RCS_WDT_DS	RCS_WATCHDOG_TIMER_DISABLE
59	AOCE_RCS_CNTIN_EN	RCS_CONTINUATION_ENABLE
5A	AOCE_RCS_CNTIN_DS	RCS_CONTINUATION_DISABLE
6A	AOCE_HLV_OPEN	HIGH_PRESSURE_VALVE_OPEN
7A	AOCE_HLV_CLOSE	HIGH_PRESSURE_VALVE_CLOSE
6B	AOCE_LV-1_OPEN	LATCHING_VALVE-1_OPEN
7B	AOCE_LV-1_CLOSE	LATCHING_VALVE-1_CLOSE
6C	AOCE_LV-2_OPEN	LATCHING_VALVE-2_OPEN
7C	AOCE_LV-2_CLOSE	LATCHING_VALVE-2_CLOSE
6D	AOCE_LV-3_OPEN	LATCHING_VALVE-3_OPEN
7D	AOCE_LV-3_CLOSE	LATCHING_VALVE-3_CLOSE
6E	AOCE_LV-4_OPEN	LATCHING_VALVE-4_OPEN
7E	AOCE_LV-4_CLOSE	LATCHING_VALVE-4_CLOSE
6F	AOCE_LV-5_OPEN	LATCHING_VALVE-5_OPEN
7F	AOCE_LV-5_CLOSE	LATCHING_VALVE-5_CLOSE
8A	AOCE_LV-6_OPEN	LATCHING_VALVE-6_OPEN
8B	AOCE_LV-6_CLOSE	LATCHING_VALVE-6_CLOSE
8C	AOCE_LV-M_OPEN	LATCHING_VALVE-M_OPEN
8D	AOCE_LV-M_CLOSE	LATCHING_VALVE-M_CLOSE
C6	AOCE_INJ_CTL_EN	INJ_CONTROL_ENABLE
C7	AOCE_INJ_CTL_DS	INJ_CONTROL_DISABLE
E4	AOCE_SUNAC_EN	SUN_ACQUISITION_ENABLE
E5	AOCE_SUNAC_GO	SUN_ACQUISITION_START
E6	AOCE_SUNAC_DS	SUN_ACQUISITION_DISABLE
E7	AOCE_OFSET_EN	SUN_OFSET_ENABLE
E8	AOCE_OFSET_GO	SUN_OFSET_START
E9	AOCE_OFSET_DS	SUN_OFSET_DISABLE
EA	AOCE_BK-TRK_EN	BACK_UP_TRACKING_MODE_ENABLE
EB	AOCE_BK-TRK_GO	BACK_UP_TRACKING_MODE_START

Table C-1 DC Command List (6/23)

AOCE	*IC-Code : 02*

XY Code	Command Name	Function
EC	AOCE_BK-TRK_DS	BACK_UP_TRACKING_MODE_DISABLE
ED	AOCE_ERT-AC_EN	EARTH_ACQUISITION_MODE_ENABLE
EE	AOCE_ERT-AC_GO	EARTH_ACQUISITION_MODE_START
EF	AOCE_ERT-AC_DS	EARTH_ACQUISITION_MODE_DISABLE
F0	AOCE_SHD_DS	SAFE_HOLD_MODE_DISABLE
F1	AOCE_INJ_CTL_GO	INJ_CONTROL_START
FB	AOCE_SRCH_GO	EARTH_SEARCH_MODE_START
FC	AOCE_SRCH_DS	EARTH_SEARCH_MODE_DISABLE
FD	AOCE_SHD_EN	SAFE_HOLD_MODE_ENABLE
FE	AOCE_SHD_GO	SAFE_HOLD_MODE_START
FF	AOCE_SHD_EXT	SAFE_HOLD_MODE_EXIT
60	AOCE_OMS_PWR_ON	OMS_DRIVER_POWER_ON
61	AOCE_OMS_PWR_OF_EN	OMS_DRIVER_POWER_OFF_ENABLE
62	AOCE_OMS_PWR_OFF	OMS_DRIVER_POWER_OFF
63	AOCE_OMS_EN	OMS_CONTROL_ENABLE
64	AOCE_OMS_GO	OMS_CONTROL_START
65	AOCE_OMS_STOP	OMS_CONTROL_STOP
66	AOCE_OMS_MBT_EN	OMS_CONTINUOUS_COUNTER_ENABLE
67	AOCE_OMS_MBT_DS	OMS_CONTINUOUS_COUNTER_DISABLE
CE	AOCE_IP/PC_SSC_TRK	IP/PC_SSC_TRACKING_MODE
CF	AOCE_IP/PC_DS	IP/PC_DISABLE
E2	AOCE_FORCED_CTL_EN	FORCED_CONTROL_CONTINUE_MODE_ENABLE
E3	AOCE_FORCED_CTL_DS	FORCED_CONTROL_CONTINUE_MODE_DISABLE
F5	AOCE_ERR_WATCH_EN	SUN_ANGLE_WATCH_ENABLE
F6	AOCE_ERR_WATCH_DS	SUN_ANGLE_WATCH_DISABLE
F7	AOCE_DRIFT_CHK_EN	ATTITUDE_DRIFT_NOTIFY_ENABLE
F8	AOCE_DRIFT_CHK_DS	ATTITUDE_DRIFT_NOTIFY_DISABLE

Table C-1 DC Command List (7/23)

TCI	IC-Code : 03

XY Code	Command Name	Function
30	TCI_USO_OFF	USO_POWER_OFF
31	TCI_USO_ON	USO_POWER_ON
40	TCI_SSW-A/LGA-A_SEL	SSW_LGA-A_SELECT
41	TCI_SSW-A/SSW-B_SEL	SSW-A_SSW-B_SELECT
50	TCI_SSW-B/HGA_SEL	SSW-B_HGA_SELECT
51	TCI_SSW-B/LGA-B_SEL	SSW-B_LGA-B_SELECT
23	TCI_TMS_ON	TMS_POWER_ON
24	TCI_TMS_OFF	TMS_POWER_OFF
25	TCI_TMS_HI_PWR	TMS_HIGH_POWER_ON
33	TCI_TMS_RNG-A	TMS_RNG-A_SELECT
34	TCI_TMS_RNG-B	TMS_RNG-B_SELECT
35	TCI_TMS_RNG_OFF	TMS_RNG_OFF
43	TCI_TMS_TLM_MOD_ON	TMS_TLM_MOD_ON
44	TCI_TMS_TLM_MOD_OFF	TMS_TLM_MOD_OFF
53	TCI_TMS_COH_ENA	TMS_COHERENT_ENABLE
54	TCI_TMS_COH_DIS	TMS_COHERENT_DISABLE
55	TCI_TMS_LOCAL_USO	TMS_COHERENT_USO
63	TCI_TMX_ON	TMX_POWER_ON
64	TCI_TMX_OFF	TMX_POWER_OFF
73	TCI_TMX_RNG-A	TMX_MODURATION SW ON and RNG-A MODE
74	TCI_TMX_RNG-B	TMX_MODURATION SW ON and RNG-B MODE
83	TCI_TMX_TLM_MODE	TMX_MODURATION SW ON and TLM_MODE
84	TCI_TMX_MODURAT_OFF	TMX_TLM_MODURATION_OFF
93	TCI_TMX_COH_ENA	TMX_COHERENT_ENABLE
94	TCI_TMX_COH_DIS	TMX_COHERENT_DISABLE
95	TCI_TMX_LOCAL_TMS	TMX_COHERENT_TMS
60	TCI_INS-1_ON	INS1_POWER_ON
70	TCI_INS-2_ON	INS2_POWER_ON
61	TCI_INS_OFF	INS_POWER_OFF
71	TCI_INS_SA-MODE	INS_SA_MODE
72	TCI_INS_KM-MODE	INS_KM_MODE
62	TCI_EPT_PDL_DEP	EPT_PDL_DEPLOY
42	TCI_EPT-SA_OFF	EPT_POWER_OFF
80	TCI_SPM_ON	SPM_POWER_ON
81	TCI_SPM_OFF	SPM_POWER_OFF
82	TCI_SPM_LV0	SPM_LEVEL_0_SET
90	TCI_SPM_LV1	SPM_LEVEL_1_SET
91	TCI_SPM_LV2	SPM_LEVEL_2_SET
92	TCI_SPM_LV3	SPM_LEVEL_3_SET
A0	TCI_SPM_CNT_CLR	SPM_COUNTER_CLEAR
A1	TCI_SPM_GUARD_ENA	SPM_GUARD_PALS_ENABLE
A2	TCI_SPM_GUARD_DIS	SPM_GUARD_PALS_DISABLE

Table C-1 DC Command List (8/23)

HCE	*IC-Code : 04*

XY Code	Command Name	Function
47	HCE_BC_ENA_CANCEL	BC ENABLE CANCEL
53	HCE_TEMP_HI_SEL	Threshold Temp is "High" for Shadow
54	HCE_TEMP_LO_SEL	Threshold Temp is "Low" for "Sunrise" case
44	HCE_CRT_LMT_CLR	Clear of current limitter flag
5D	HCE_HTR_ALL_AUTO	HEATER ALL AUTO CONTROL
55	HCE_GROUP_CTL_ON	GROUP CONTROL ON
56	HCE_GROUP_CTL_OFF	GROUP CONTROL OFF

Table C-1 DC Command List (9/23)

PCD	IC-Code : 05

XY Code	Command Name	Function
28	PCD_BAT_BC_EXE	BAT_BC_EXECUTE
37	PCD_INT/EXT_ENA	BAT_INTERNAL/EXITERNAL_COMMAND_ENABLE
38	PCD_INT/EXT_DIS	BAT_INTERNAL/EXITERNAL_COMMAND_DISABLE
41	PCD_BAT-A_UVC_ENA	BAT-A_UVC_ENABLE
42	PCD_BAT-A_UVC_DIS	BAT-A_UVC_DISABLE
43	PCD_BAT-B_UVC_ENA	BAT-B_UVC_ENABLE
44	PCD_BAT-B_UVC_DIS	BAT-B_UVC_DISABLE
45	PCD_UVC_HIST_RST	BAT_UVC_HISTORY_RESET
46	PCD_SR_REQ_ENA	SUN_RISE_REQUEST_ENABLE
47	PCD_SR_REQ_DIS	SUN_RISE_REQUEST_DISABLE
51	PCD_BAT_UVC_L1	BAT_UVC_LEVEL_1
52	PCD_BAT_UVC_L2	BAT_UVC_LEVEL_2
53	PCD_BAT_TAPR_L1	BAT_TAPER_LEVEL_1
54	PCD_BAT_TAPR_L2	BAT_TAPER_LEVEL_2
55	PCD_BAT_RCN_ON	BAT_RECONDITIONNING_ON
56	PCD_BAT_RCN_OFF	BAT_RECONDITIONNING_OFF
57	PCD_DIST_HEATER_ON	HCE_BUS_ON
58	PCD_DIST_HEATER_OFF	HCE_BUS_OFF
61	PCD_BAT-A_INT	BAT-A_INTERNAL
62	PCD_BAT-A_EXT	BAT-A_EXTERNAL
63	PCD_BAT-A_TCNT_ENA	BAT-A_TRICKLE_CONTROL_ENABLE
64	PCD_BAT-A_TCNT_DIS	BAT-A_TRICKLE_CONTROL_DISABLE
65	PCD_DIST_XPA_ON	XPA_BUS_ON
66	PCD_DIST_XPA_OFF	XPA_BUS_OFF
67	PCD_DIST_AOCE_ON	AOCE_BUS_ON
68	PCD_DIST_AOCE_OFF	AOCE_BUS_OFF
71	PCD_BAT-B_INT	BAT-B_INTERNAL
72	PCD_BAT-B_EXT	BAT-B_EXTERNAL
73	PCD_BAT-B_TCNT_ENA	BAT-B_TRICKLE_CONTROL_ENA
74	PCD_BAT-B_TCNT_DIS	BAT-B_TRICLE_CONTROL_DIS
77	PCD_DIST_CI_PSU_ON	PSU_CI_BUS_ON
78	PCD_DIST_CI_PSU_OFF	PSU_CI_BUS_OFF
81	PCD_BOOST_ENA	BOOST_UP_CONVERTER_ENABLE
82	PCD_BOOST_DIS	BOOST_UP_CONVERTER_DISABLE
83	PCD_CI_ON/OF_ENA	PSU_CI_BUS_ON/OFF_ENABLE
84	PCD_CI_ON/OF_DIS	PSU_CI_BUS_ON/OFF_DISABLE
85	PCD_DIST_PSA_ON	PSA_BUS_ON
86	PCD_DIST_PSA_OFF	PSA_BUS_OFF
87	PCD_DIST_PWA_ON	PWA_BUS_ON
88	PCD_DIST_PWA_OFF	PWA_BUS_OFF
91	PCD_SHNT_SW1_EN	SHNT_SW1_ENABLE
92	PCD_SHNT_SW1_DS	SHNT_SW1_DISABLE

Table C-1 DC Command List (10/23)

PCD	IC-Code : 05

XY Code	Command Name	Function
93	PCD_BAT-A_TCHG_ENA	BAT-A_TRICKLE_CHARGE_ENABLE
94	PCD_BAT-A_TCHG_DIS	BAT-A_TRICKLE_CHARGE_DISABLE
95	PCD_DIST_MPM_ON	MPM_BUS_ON
96	PCD_DIST_MPM_OFF	MPM_BUS_OFF
97	PCD_DIST_MIC_ON	MIC_BUS_ON
98	PCD_DIST_MIC_OFF	MIC_BUS_OFF
A1	PCD_SHNT_SW2_EN	SHNT_SW2_ENABLE
A2	PCD_SHNT_SW2_DS	SHNT_SW2_DISABLE
A3	PCD_BAT-B_TCHG_ENA	BAT-B_TRICKLE_CHARGE_ENABLE
A4	PCD_BAT-B_TCHG_DIS	BAT-B_TRICKLE_CHARGE_DISABLE
A5	PCD_DIST_TPA_ON	TPA_BUS_ON
A6	PCD_DIST_TPA_OFF	TPA_BUS_OFF
A7	PCD_DIST_IMI_ON	IMI_BUS_ON
A8	PCD_DIST_IMI_OFF	IMI_BUS_OFF
B1	PCD_SHNT_SW3_EN	SHNT_SW3_ENABLE
B2	PCD_SHNT_SW3_DS	SHNT_SW3_DISABLE
B5	PCD_DIST_NMS_ON	NMS_BUS_ON
B6	PCD_DIST_NMS_OFF	NMS_BUS_OFF
B7	PCD_DIST_MDC_ON	MDC_BUS_ON
B8	PCD_DIST_MDC_OFF	MDC_BUS_OFF

Table C-1 DC Command List (10/23)

PCD	IC-Code : 05

XY Code	Command Name	Function
93	PCD_BAT-A_TCHG_ENA	BAT-A_TRICKLE_CHARGE_ENABLE
94	PCD_BAT-A_TCHG_DIS	BAT-A_TRICKLE_CHARGE_DISABLE
95	PCD_DIST_MPM_ON	MPM_BUS_ON
96	PCD_DIST_MPM_OFF	MPM_BUS_OFF
97	PCD_DIST_MIC_ON	MIC_BUS_ON
98	PCD_DIST_MIC_OFF	MIC_BUS_OFF
A1	PCD_SHNT_SW2_EN	SHNT_SW2_ENABLE
A2	PCD_SHNT_SW2_DS	SHNT_SW2_DISABLE
A3	PCD_BAT-B_TCHG_ENA	BAT-B_TRICKLE_CHARGE_ENABLE
A4	PCD_BAT-B_TCHG_DIS	BAT-B_TRICKLE_CHARGE_DISABLE
A5	PCD_DIST_TPA_ON	TPA_BUS_ON
A6	PCD_DIST_TPA_OFF	TPA_BUS_OFF
A7	PCD_DIST_IMI_ON	IMI_BUS_ON
A8	PCD_DIST_IMI_OFF	IMI_BUS_OFF
B1	PCD_SHNT_SW3_EN	SHNT_SW3_ENABLE
B2	PCD_SHNT_SW3_DS	SHNT_SW3_DISABLE
B5	PCD_DIST_NMS_ON	NMS_BUS_ON
B6	PCD_DIST_NMS_OFF	NMS_BUS_OFF
B7	PCD_DIST_MDC_ON	MDC_BUS_ON
B8	PCD_DIST_MDC_OFF	MDC_BUS_OFF

Table C-1 DC Command List (11/23)

DR	*IC-Code : 06*

XY Code	Command Name	Function
01	DR_ON	DR_ON
02	DR_OFF	DR_OFF
34	DR_RST	DR_RESET
30	DR_REC	DR_RECORD
31	DR_REP	DR_REPRODUCE
32	DR_REC/REP	DR_RECORD/REPRODUCE
33	DR_STBY	DR_STANDBY
40	DR_SELF_CHK_ENA	DR_CHECK_ENABLE
41	DR_SELF_CHK_ON	DR_SELF_CHECK
50	DR_ECC_ON	DR_ECC_ON
51	DR_ECC_OFF	DR_ECC_OFF
42	DR_OVER_WRT_ON	DR_OVERWRITE_ON
43	DR_OVER_WRT_OFF	DR_OVERWRITE_OFF

Table C-1 DC Command List (12/23)

PSA	IC-Code : 07

XY Code	Command Name	Function
01	PSA_CPU_ON	PSA SI-CPU ON
10	PSA_HTR_ENA	PSA HEATER ENABLE
11	PSA_HTR_DIS	PSA HEATER DISABLE
12	PSA_ECC_ENA	PSA ECC ENABLE
13	PSA_ECC_DIS	PSA ECC DISABLE
14	PSA_WDT_ENA	PSA WATCHDOG TIMER ENABLE
15	PSA_WDT_DIS	PSA WATCHDOG TIMER DISABLE
16	PSA_CPU_RUN	PSA SI-CPU RUN
17	PSA_CPU_RST	PSA SI-CPU RESET
18	PSA_I_LIMIT_ENA	PSA SI-CPU CURRENT LIMITER ENABLE
19	PSA_I_LIMIT_DIS	PSA SI-CPU CURRENT LIMITER DISABLE
20	PSA_BUS_ACC_ENA	PSA BUS ACCESS ENABLE
21	PSA_BUS_ACC_DIS	PSA BUS ACCESS DISABLE
22	PSA_MOD_CHNG	PSA MODE CHANGE
80	EIS_ON	EIS SYSTEM CONTROL POWER ON
A0	EIS_OFF	EIS SYSTEM CONTROL POWER OFF
86	EIS_CAL_ON	EIS CAL ON
A6	EIS_CAL_OFF	EIS CAL OFF
88	EIS_ANTI_ENA	EIS_ANTICOINCIDENCE_ENABLE
A8	EIS_ANTI_DIS	EIS ANTICOINCIDENCE DISABLE
8A	EIS_ADD_ONE_ENA	EIS ADD ONE ENABLE
AA	EIS_ADD_ONE_DIS	EIS ADD ONE DISABLE
96	EIS_DET_AUTO	EIS DETECTOR S3 AUTO
31	PAX_OFF	ESA ISA XUV CONTROL POWER OFF
32	PSA_H32_ON	H32 POWER ON
33	PSA_H32_OFF	H32 POWER OFF
30	PAX_ON	ESA ISA XUV CONTROL POWER ON

Table C-1 DC Command List (13/23)

PWA	IC-Code : 08

XY Code	Command Name	Function
01	PWA_CPU_ON	PWA CPU ON
10	PWA_HTR_ENA	PWA HEATER ENABLE
11	PWA_HTR_DIS	PWA HEATER DISABLE
12	PWA_ECC_ENA	PWA ECC ENABLE
13	PWA_ECC_DIS	PWA ECC DISABLE
14	PWA_WDT_ENA	PWA WDT ENABLE
15	PWA_WDT_DIS	PWA WDT DISABLE
16	PWA_CPU_RUN	PWA CPU RUN
17	PWA_CPU_RST	PWA CPU RESET
18	PWA_I_LIMIT_ENA	PWA CPU CURRENT LIMITER ENABLE
19	PWA_I_LIMIT_DIS	PWA CPU CURRENT LIMITER DISABLE
70	PWA_WNT_PRE_ON	WANT PRE-AMP POWER ON
72	PWA_WNT_PRE_OFF	WANT PRE-AMP POWER OFF
74	PWA_UVC_L1_ON	PWA UVC LEVEL1 ON
78	PWA_HTR_L1_ON	PWA HEATER LEVEL1 ON
7A	PWA_HTR_L1_OFF	PWA HEATER LEVEL1 OFF
80	PWA_PWS_ON	PWS POWER ON
82	PWA_PWS_OFF	PWS POWER OFF
84	PWA_PWS_DCDC_ON	PWS DC/DC CONVERTER ON
86	PWA_PWS_DCDC_OFF	PWS DC/DC CONVERTER OFF
88	PWA_PWS_PAMP_ON	PWS POWER AMP ON
8A	PWA_PWS_PAMP_OFF	PWS POWER AMP OFF
C4	PWA_WNT_DRV_ON	WANT 1-4 DRIVE ON
C6	PWA_WNT_DRV_OFF	WANT 1-4 DRIVE/STAND-BY OFF
C8	PWA_WNT_PROG_ENA	WANT PROGRAM ENABLE
CA	PWA_WNT_PROG_DIS	WANT PROGRAM DISABLE

Table C-1 DC Command List (14/23)

MPM	*IC-Code : 09*

XY Code	Command Name	Function
01	MPM_CPU_ON	MPM_CPU_ON
04	MPM_MCRP_OUT	MCRP_OUT
05	MPM_REQ_ACK	REQ_ACK
06	MPM_TI_CNT_SET	TI_COUNT_SET
07	MPM_TI_CONT_RESTART	TI_COUNT_RESTART
08	MPM_A-BUS_GUARD	A-BUS_GUARD
09	MPM_B-BUS_GUARD	B-BUS_GUARD
0A	MPM_A-BUS_GUARD_CAN	A-BUS_GUARD_CAN
0B	MPM_B-BUS_GUARD_CAN	B-BUS_GUARD_CAN
10	MPM_HTR_ENA	HEATER_ENABLE
11	MPM_HTR_DIS	HEATER_DISABLE
12	MPM_ECC_ENA	ECC_ENABLE
13	MPM_ECC_DIS	ECC_DISABLE
14	MPM_WDT_ENA	WDT_ENABLE
15	MPM_WDT_DIS	WDT_DISABLE
16	MPM_CPU_RUN	CPU_RUN
17	MPM_CPU_RESET	CPU_RESET
18	MPM_I_LIMIT_ENA	CURRENT_LIMITTER_ENABLE
19	MPM_I_LIMIT_DIS	CURRENT_LIMITTER_DISABLE
20	MPM_BUS_ACCESS_ENA	BUS_ACCESS_ENA
21	MPM_BUS_ACCESS_DIS	BUS_ACCESS_DIS
30	MGF_PET_ON	MGF/PET_ON
31	MGF_PET_OFF	MGF/PET_OFF
32	MGF_SENSE_NOR	MGF_SENSE_NORMAL
33	MGF_SENSE_REV	MGF_SENSE_REVERSE
34	MGF_RNG_AUTO	MGF_RANGE_AUTO_CONTROL
35	PET_CAL_ON	PET_CALIBRATION_ON
36	PET_CAL_OFF	PET_CALIBRATION_OFF
40	UVS_ON	UVS_ON
41	UVS_OFF	UVS_OFF
42	UVS_RAM_RELOAD	UVS_RAM_RELOAD
43	UVS_AUTO	UVS_AUTO_CONTROL
44	UVS_MANUAL	UVS_MANUAL_CONTROL
47	UVS_G_HV_ENA	UVS_G_HV_ENABLE
48	UVS_G_HV_ON	UVS_G_HV_ON
49	UVS_G_HV_OFF	UVS_G_HV_OFF
4B	UVS_PM_HV_ENA	UVS_PM_HV_ENABLE
4C	UVS_PM_HV_ON	UVS_PM_HV_ON
4D	UVS_PM_HV_OFF	UVS_PM_HV_OFF
4E	UVS_PM_H_FIL_ON	UVS_PM_H_FILAMENT_ON
4F	UVS_PM_H_FIL_OFF	UVS_PM_H_FILAMENT_OFF
50	UVS_PM_D_FIL_ON	UVS_PM_D_FILAMENT_ON

Table C-1 DC Command List (15/23)

MPM	*IC-Code : 09*

XY Code	Command Name	Function
51	UVS_PM_D_FIL_OFF	UVS_PM_D_FILAMENT_OFF
80	MST_STBY_ON	MST_STANDBY_ON
81	MST_STBY_OFF	MST_STANDBY_OFF
82	MST_EXT_MODE	MST_EXTENTION_MODE
83	MST_RET_MODE	MST_RETRACTION_MODE
84	MST_DRV_ON	MST_DRIVE_ON
85	MST_DRV_OFF	MST_DRIVE_OFF
86	MST_HTR_ON	MST_HEATER_MANUAL_ON
87	MST_HTR_OFF	MST_HEATER_OFF
8C	MST_HTR_AUTO	MST_HEATER_AUTO_CONTROL
8D	MST_HTR_MAN	MST_HEATER_MANUAL_CONTROL
F0	MPM_UVC	MPM_UVC

Table C-1 DC Command List (16/23)

MIC	*IC-Code : 0A*

XY Code	Command Name	Function
01	MIC_CPU_ON	CPU ON
10	MIC_HTR_ENA	HEATER ON
11	MIC_HTR_DIS	HEATER OFF
12	MIC_ECC_ENA	Enable ECC for SRAM in SICPU / Clear ECC error flag
13	MIC_ECC_DIS	Disable the ECC for the SRAM in SICPU
14	MIC_WDT_ENA	Enable WDT for SRAM in SICPU / Clear WDT error flag
15	MIC_WDT_DIS	Disable the WDT for the SRAM in SICPU
16	MIC_CPU_RUN	Make the CPU running
17	MIC_CPU_RESET	Reset the CPU
18	MIC_LD-ENA	Enable the current limiter for latch-up
19	MIC_LD-DIS	Disable the current limiter for latch-up
20	MIC_BUS_ACS_ENA	Connect PIM-bus to CPU-bus
21	MIC_BUS_ACS_DIS	Disconnect PIM-bus to CPU-bus
31	MIC_CCD_ON	Supply the power to CCD and analog circuit
32	MIC_CCD_OFF	Shut off the power to CCD and analog circuit
33	MIC_RP_BACK	Set the read pointer to the previous image
34	MIC_RP_FORW	Set the read pointer to the next image
35	MIC_CP_BACK	Set the compression pointer to the previous image
36	MIC_CP_RESET	Set the compression pointer to the next image
37	MIC_COMPRESS	Compress the current image data
38	MIC_STERR_RESET	Reset the status error flags
39	MIC_INIT	Clear the image data control imformation
3A	MIC_UVC	Clear cmd buf / Mk CCD off / Sw ICM to pwr dwn mod
43	MIC_STOP	Stop searching for target in case of AUTO-MODE
45	MIC_CCD_DRV_START	Start driving the CCD
46	MIC_CCD_DRV_STOP	Srop driving the CCD
53	MIC_TRK_START	Track the target

Table C-1 DC Command List (17/23)

IMI	*IC-Code : 0B*

XY Code	Command Name	Function
01	IMI_CPU_ON	Turn on CPU
02	IMI_CPU_OFF	Turn off CPU
30	IMI_HVALL_OFF	Ref. level B1/B2, Acc, Dfl all Off (=0)
31	IMI_HVALL_ON	Ref. level B1/B2, Acc, Dfl all On(=Set)
32	IMI_BREF_OFF	B1/B2 ref. level Off
33	IMI_BREF_ON	B1/B2 ref. level On
34	IMI_PAREF_OFF	Acceleration ref. level Off
35	IMI_PAREF_ON	Acceleration ref. level On
36	IMI_DFREF_OFF	Deflection HV ref. level Off
37	IMI_DFREF_ON	Deflection HV ref. level On
39	IMI_HV_PWR_LOW	Set low HV power mode.
3A	IMI_HV_PWR_NRML	Set normal HV power mode.
40	IMI_D_TYPE_CF8	Set compressed 8-bit float output (Default)
41	IMI_D_TYPE_CB8	Set compressed 8-bit LSB output.
42	IMI_D_TYPE_UF8	Set uncompressed 8-bit float output.
43	IMI_D_TYPE_UB8	Set uncompressed 8-bit LSB output.
44	IMI_D_TYPE_WRD	Set uncompressed 16-bit WORD output.
45	IMI_DFLTYPE_STEP	Set normal dfl.HV stepping mode.
46	IMI_DFLTYPE_DFFIX	Set fixed E-level defelction mode.
47	IMI_DFLTYPE_DFSET	Set fixed DA deflection mode.
4A	IMI_DEBUG	Restart under the debugger (via serial link). Ground only.
4B	IMI_IMAGER	Set real imager address.
4E	IMI_E_FIFO	Empty TM Fifo.
4F	IMI_SYNC_DIR	Reverse next cmd. synced/direct
50	IMI_SIM_SPIN_OFF	Forced simulated spin Off (Default)
51	IMI_SIM_SPIN_ON	Forced simulated spin On
52	IMI_FIFO_CONNECT	connect = data goes to Fifo
53	IMI_FIFO_SLEEP	disconect = no data (Default)
54	IMI_SMODE_OFF	S/C mode switch Off
55	IMI_SMODE_ON	S/C mode switch On (Default)
56	IMI_AMODE_OFF	Automatic mode switch Off
57	IMI_AMODE_ON	Automatic mode switch On (Default)
58	IMI_ALT_PA_OFF	Alternating Post.acc Off (Default)
59	IMI_ALT_PA_ON	Alternating Post.acc On
5A	IMI_ENGY_FULL	Select Energy table 0 (0.01 - 35 keV)
5B	IMI_ENGY_SW	Select Energy table 1 (0.1 - 10 keV)
5E	IMI_T_IGNORE	keep same HV ref-value regardless of Temp.
5F	IMI_T_ADJUST	adjust HV ref-value for different Temp.
76	IMI_EXECUTE	Execute programming of "75-blocks".
77	IMI_ABORT	Abort"75-blocks" sequence.
80	IMI_HV_OFF	HV main Off and Disable
81	IMI_HV_ON	HV main On

Table C-1 DC Command List (18/23)

IMI	*IC-Code : 0B*

XY Code	Command Name	Function
82	IMI_HV_ENA	HV main switching enable
83	IMI_B1_ON	HV bias 1 On (Mutually excl. with B2 On)
8C	IMI_B2_ON	HV bias 2 On (Mutually excl. with B1 On)
8B	IMI_B1_OFF	HV bias 1 Off
84	IMI_B2_OFF	HV bias 2 Off
85	IMI_RESET	Hardware reset the CPU
90	IMI_MODE_IDLE	A low power none output mode.
91	IMI_MODE_CAL1	Calibration 1 mode. (Special)
92	IMI_MODE_CAL2	Calibration 2 mode. (Special)
93	IMI_MODE_TEST	Test mode (commissioning/bench/reprogramming, Special)
94	IMI_MODE_A12K	Main group A (Group/index) bit rates.
95	IMI_MODE_A6K	Main group A (Group/index) bit rates.
96	IMI_MODE_A3K	Main group A (Group/index) bit rates.
97	IMI_MODE_A1.5K	Main group A (Group/index) bit rates.
98	IMI_MODE_A768	Main group A (Group/index) bit rates.
99	IMI_MODE_A384	Main group A (Group/index) bit rates.
9A	IMI_MODE_A192	Main group A (Group/index) bit rates.
9B	IMI_MODE_A96	Main group A (Group/index) bit rates.
9C	IMI_MODE_A48	Main group A (Group/index) bit rates.
9D	IMI_MODE_A24	Main group A (Group/index) bit rates.
9E	IMI_MODE_A12	Main group A (Group/index) bit rates.
9F	IMI_MODE_A6	Main group A (Group/index) bit rates.
A0	IMI_MODE_B12K	Main group B (Group/index) bit rates.
A1	IMI_MODE_B6K	Main group B (Group/index) bit rates.
A2	IMI_MODE_B3K	Main group B (Group/index) bit rates.
A3	IMI_MODE_B1.5K	Main group B (Group/index) bit rates.
A4	IMI_MODE_B768	Main group B (Group/index) bit rates.
A5	IMI_MODE_B384	Main group B (Group/index) bit rates.
A6	IMI_MODE_B192	Main group B (Group/index) bit rates.
A7	IMI_MODE_B96	Main group B (Group/index) bit rates.
A8	IMI_MODE_B48	Main group B (Group/index) bit rates.
A9	IMI_MODE_B24	Main group B (Group/index) bit rates.
AA	IMI_MODE_B12	Main group B (Group/index) bit rates.
AB	IMI_MODE_B6	Main group B (Group/index) bit rates.
AC	IMI_MODE_C12K	Main group C (Group/index) bit rates.
AD	IMI_MODE_C6K	Main group C (Group/index) bit rates.
AE	IMI_MODE_C3K	Main group C (Group/index) bit rates.
AF	IMI_MODE_C1.5K	Main group C (Group/index) bit rates.
B0	IMI_MODE_C768	Main group C (Group/index) bit rates.
B1	IMI_MODE_C384	Main group C (Group/index) bit rates.
B2	IMI_MODE_C192	Main group C (Group/index) bit rates.
B3	IMI_MODE_C96	Main group C (Group/index) bit rates.

Table C-1 DC Command List (19/23)

IMI	*IC-Code : 0B*

XY Code	Command Name	Function
B4	IMI_MODE_C48	Main group C (Group/index) bit rates.
B5	IMI_MODE_C24	Main group C (Group/index) bit rates.
B6	IMI_MODE_C12	Main group C (Group/index) bit rates.
B7	IMI_MODE_C6	Main group C (Group/index) bit rates.
B8	IMI_MODE_E12K	Main group E (Group/index) bit rates.
B9	IMI_MODE_E6K	Main group E (Group/index) bit rates.
BA	IMI_MODE_E3K	Main group E (Group/index) bit rates.
BB	IMI_MODE_E1.5K	Main group E (Group/index) bit rates.
BC	IMI_MODE_E768	Main group E (Group/index) bit rates.
BD	IMI_MODE_E384	Main group E (Group/index) bit rates.
BE	IMI_MODE_E192	Main group E (Group/index) bit rates.
BF	IMI_MODE_E96	Main group E (Group/index) bit rates.
C0	IMI_MODE_E48	Main group E (Group/index) bit rates.
C1	IMI_MODE_E24	Main group E (Group/index) bit rates.
C2	IMI_MODE_E12	Main group E (Group/index) bit rates.
C3	IMI_MODE_E6	Main group E (Group/index) bit rates.
C4	IMI_MODE_F12K	Main group F (Group/index) bit rates.
C5	IMI_MODE_F6K	Main group F (Group/index) bit rates.
C6	IMI_MODE_F3K	Main group F (Group/index) bit rates.
C7	IMI_MODE_F1.5K	Main group F (Group/index) bit rates.
C8	IMI_MODE_F768	Main group F (Group/index) bit rates.
C9	IMI_MODE_F384	Main group F (Group/index) bit rates.
CA	IMI_MODE_F192	Main group F (Group/index) bit rates.
CB	IMI_MODE_F96	Main group F (Group/index) bit rates.
CC	IMI_MODE_F48	Main group F (Group/index) bit rates.
CD	IMI_MODE_F24	Main group F (Group/index) bit rates.
CE	IMI_MODE_F12	Main group F (Group/index) bit rates.
CF	IMI_MODE_F6	Main group F (Group/index) bit rates.
D0	IMI_MODE_D12K	Main group D (Group/index) bit rates.
D1	IMI_MODE_D6K	Main group D (Group/index) bit rates.
D2	IMI_MODE_D3K	Main group D (Group/index) bit rates.
D3	IMI_MODE_D1.5K	Main group D (Group/index) bit rates.
D4	IMI_MODE_D768	Main group D (Group/index) bit rates.
D5	IMI_MODE_D384	Main group D (Group/index) bit rates.
D6	IMI_MODE_D192	Main group D (Group/index) bit rates.
D7	IMI_MODE_D96	Main group D (Group/index) bit rates.
D8	IMI_MODE_D48	Main group D (Group/index) bit rates.
D9	IMI_MODE_D24	Main group D (Group/index) bit rates.
DA	IMI_MODE_D12	Main group D (Group/index) bit rates.
DB	IMI_MODE_D6	Main group D (Group/index) bit rates.
DC	IMI_MODE_DUMP_R	Dump code memory RAM. (Special)
DD	IMI_MODE_DUMP_E	Dump code memory EEPROM. (Special)

Table C-1 DC Command List (20/23)

IMI	*IC-Code : 0B*

XY Code	Command Name	Function
DE	IMI_MODE_DUMP_P	Dump code memory PROM. (Special)
E0	IMI_SEL_M3_0	Select Mass-Table = Default (for 3 masses)
E1	IMI_SEL_M3_1	Select Mass-Table = ver. 1 (for 3 masses)
E2	IMI_SEL_M3_2	Select Mass-Table = ver. 2 (for 3 masses)
E4	IMI_SEL_M4_0	Select Mass-Table = Default (for 4 masses)
E5	IMI_SEL_M4_1	Select Mass-Table = ver. 1 (for 4 masses)
E6	IMI_SEL_M4_2	Select Mass-Table = ver. 2 (for 4 masses)
E8	IMI_SEL_M8_0	Select Mass-Table = Default (for 8 masses)
E9	IMI_SEL_M8_1	Select Mass-Table = ver. 1 (for 8 masses)
EA	IMI_SEL_M8_2	Select Mass-Table = ver. 2 (for 8 masses)
F0	IMI_MODE_A	Set group A
F1	IMI_MODE_B	Set group B
F2	IMI_MODE_C	Set group C
F3	IMI_MODE_E	Set group E
F4	IMI_MODE_F	Set group F
F5	IMI_MODE_D	Set group D

Table C-1 DC Command List (21/23)

MDC	*IC-Code : 0C*

XY Code	Command Name	Function
01	MDC_RST	MDC HARDWARE RESET
04	MDC_MCRP_OUT	
05	MDC_REQ_ACK	
06	MDC_TI_CNT_SET	
07	MDC_TI_CNT_RESTART	
08	MDC_A_BUS_GUARD	
09	MDC_B_BUS_GUARD	
0A	MDC_A_BUS_CANCEL	
0B	MDC_B_BUS_CANCEL	
20	MDC_BUS_ACCESS_ENA	
21	MDC_BUS_ACCESS_DIS	
22	MDC_MODE_CHNG	MDC COMMUNICATION MODE CHANGE
30	MDC_FCALL	INITIALIZATION OF FUNCTION CALL BLOCK COMMAND
31	MDC_PSET	INITIALIZATION OF PARAMETER SET OR DATA TRANSMISSION BC
40	MDC_HV_OFF	SWITCH HV OFF
80	MDC_HV_ENA	ENABLE HV SWITCH ON
C0	MDC_HV_ON	SWITCH HV ON

Table C-1 DC Command List (22/23)

TPA	*IC-Code : 0D*

XY Code	Command Name	Function
01	TPA_USER_ON	TPA_ON
02	TPA_USER_OFF	TPA_OFF
30	TPA_CPU_RESET_PRIM	RESET_CPU_PRIMARY
32	TPA_CPU_RESET_SECN	RESET_CPU_REDUNDANT
34	TPA_ARM	ARM_BOOM_DEPLOY
36	TPA_CANCEL_ARM	CANCEL_ARM_BOOM_DEPLOY
38	TPA_DEPLOY_PRIMARY	ACTIVATE_PRIMARY_BOOM_DEPLOY
3A	TPA_DEPLOY_REDUNDNT	ACTIVATE_REDUNDUNT_BOOM_DEPLOY
3C	TPA_CAN_DEPLOY_PRIM	CANCEL_PRIMARY_BOOM_DEPLOY
3E	TPA_CAN_DEPLOY_REDN	CANCEL_REDANDANT_BOOM_DEPLOY
65	TPA_EEPROM_0	RUN_EEPROM_0_PROGRAM
66	TPA_EEPROM_1	RUN_EEPROM_1_PROGRAM
6A	TPA_ENTER_SETUP	ENTER_MANUAL_SETUP
73	TPA_EXIT_BOOT	EXIT_MANUAL_BOOT
80	TPA_PERI_ION	START_PERIAPSIS_ION_MODE
83	TPA_PERI_ELE	START_PERIAPSIS_ELECTRON_MODE
86	TPA_STND_ION	START_STANDARD_ION_MODE
89	TPA_STND_ELE	START_STANDARD_ELECTRON_MODE
A7	TPA_ENTER_IDLE	ENTER_IDLE_STATE
AE	TPA_ENTER_PROG_LOAD	ENTER_PROGRAM_UPLOAD_STATE
B0	TPA_TLM	TEST_MISSION_TLM_MESSAGE
B6	TPA_PRGE_MIS_TLM_BU	PURGE_MISSION TLM_BUFFERS
BC	TPA_ABORT_ACT_COM	ABORT_ACTIVE_COMMANDS
C2	TPA_SENSOR_ON	TURN_ON_SENSOR_POWER
C7	TPA_SENSOR_OFF	TURN_OFF_SENSOR_POWER
D3	TPA_HVPS_RESET	SET_GOAL_VALUES_OF_HVPS
D6	TPA_HVPS_ON	TURN_ON_HVPS_POWER
D9	TPA_HVPS_OFF	TURN_OFF_AND_DISABLE_HVPS

Table C-1 DC Command List (23/23)

NMS	*IC-Code : 0E*

XY Code	Command Name	Function
25	NMS_HV_ENA	Enables NMS high voltages
26	NMS_HV_ON	Turn-on NMS high voltages
27	NMS_HV_OFF	Turn-off NMS high voltages
2C	NMS_STBY	Halt the running sequence
30	NMS_PYRO1_ARM	Enable the firing circuit 1
33	NMS_PYRO1_FIRE	Turn on the firing circuit 1 to fire pyro 1
38	NMS_PYRO2_ARM	Enable the firing circuit 2
3A	NMS_PYRO2_FIRE	Turn on the firing circuit 2 to fire pyro 2
3E	NMS_SAFE	Turn off the firing circuit 1 and 2
31	NMS_HVB_ON	Turn on HV Regulater
32	NMS_HVB_OFF	Turn off HV Regulater
34	NMS_EM_ON	Turn on Electron Multiplier
37	NMS_EM_OFF	Turn off Electron Multiplier
39	NMS_FIL_ON	Turn on Filament
3B	NMS_FIL_OFF	Turn off Filament
3C	NMS_RF_ENA	Enable Radio Frequency
3F	NMS_RF_RESET	Reset Radio Frequency

Table C-2 BC Command List (1/26)

DHU | **IC-Code : 01**

BC Name	BC F/V Spec	BC Size (byte)	Specifier (byte)	Parameter (byte)	Code DC (HEX)	Code BC (HEX)	BC Bit MSB B0	B1	B2	B3	B4	B5	B6	LSB B7
DHU_MODE_CHNG	F	3	0	3	22	*	0	0	0	FORMAT No.				
							0	0	0	0	EDITION RATE			
							X BIT RATE				S BIT RATE			
DHU_DUMP_PRM_SET	F	5	0	5	23	*	0	MEM DMP UPPER ADR						
							MEM DMP LOWER ADR							
							0	MEM DMP BLOCK COUNT						
							LOOP CNT			PIM ID				
							0	0	0	FORMAT				
DHU_TLM-ROM_UPDATE	V	133	0	133	24	*	DUMMY DATA							
							0	0	0	ADDRESS (H)				
							ADDRESS (M)							
							ADDRESS (L)							
							DATA SIZE (L)							
							TLM FORMAT DATA							
DHU_DUMP_NUM_SET	F	1	0	1	2F	*	0	0	0	FORMAT				
DHU_BFM_UPDATE	V	133	0	133	62	*	DUMMY DATA							
							0	ADDRESS (H)						
							ADDRESS (M)							
							ADDRESS (L)							
							BFM DATA SIZE (L)							
							BFM DATA							
DHU_USR-PRG_IPL	F	8	0	8	63	*	0	BFM ADDRESS (H)						
							BFM ADDRESS (M)							
							BFM ADDRESS (L)							
							0	0	0	PIM ID				
							0	USER ADDRESS (H)						
							USER ADDRESS (M)							
							USER ADDRESS (L)							
							BLOCK COUNT							
DHU_USR-PRG_CHK	F	8	0	8	64	*	0	BFM ADDRESS (H)						
							BFM ADDRESS (M)							
							BFM ADDRESS (L)							
							0	0	0	PIM ID				
							0	USER ADDRESS (H)						
							USER ADDRESS (M)							
							USER ADDRESS (L)							
							BLOCK COUNT							
DHU_PRG_AP_IPL	F	8	0	8	71	*	0	0	0	0	ROM ADDRESS (H)			
							ROM ADDRESS (M)							
							ROM ADDRESS (L)							
							DUMMY DATA							
							0	0	0	0	0	RAM ADDRESS (H)		
							RAM ADDRESS (M)							
							RAM ADDRESS (L)							
							BLOCK COUNT							

Table C-2 BC Command List (2/26)

DHU | IC-Code : 01

BC Name	BC F/V Spec	BC Size (byte)	Speci-fier (byte)	Para-meter (byte)	Code DC (HEX)	Code BC (HEX)	BC Bit MSB B0	B1	B2	B3	B4	B5	B6	B7 LSB
DHU_PRG_OS_IPL	F	8	0	8	72	*	0	0	0	0	ROM ADDRESS (H)			
							ROM ADDRESS (M)							
							ROM ADDRESS (L)							
							DUMMY DATA							
							0	0	0	0	0	RAM ADDRESS		
							RAM ADDRESS (M)							
							RAM ADDRESS (L)							
DHU_AP-ROM_UPDATE	V	133	0	133	73	*	BLOCK COUNT							
							DUMMY DATA							
							0	0	0	0	PROGRAM ADDRESS (H)			
							PROGRAM ADDRESS (M)							
							PROGRAM ADDRESS (L)							
							DATA SIZE (L)							
DHU_USR-PRG_RAM_WRT	V	133	0	133	82	*	PROGRAM DATA							
							0	0	0	PIM ID				
							0	WRITE ADDRESS (H)						
							WRITE ADDRESS (M)							
							WRITE ADDRESS (L)							
							DATA SIZE (L)							
DHU_RAM_WRT	V	133	0	133	83	*	PROGRAM DATA							
							DUMMY DATA							
							0	0	0	0	0	WRITE ADDRESS (H)		
							WRITE ADDRESS (M)							
							WRITE ADDRESS (L)							
							DATA SIZE (L)							
DHU_RQOG_SET	F	2	0	2	9F	*	WRITE DATA							
							0	0	0	0	0	0	0	0
DHU_TI_ABS_CAL	F	4	0	4	A4	*	0	0	0	0	0	REQUEST OG No		
							TIME DATA (H)							
							TIME DATA (MH)							
							TIME DATA (ML)							
DHU_TI_DIF_CAL	F	2	0	2	A5	*	TIME DATA (L)							
							TIME DATA (H)							
DHU_ROG_SET	F	2	0	2	B8	*	TIME DATA (L)							
							0	0	0	0	0	0	0	0
DHU_SH_TOUT_SET	F	4	0	4	C7	*	OG No.							
							TIME DATA (H)							
							TIME DATA (MH)							
							TIME DATA (ML)							
DHU_ATOG_SET	F	2	0	2	CF	*	TI			0	0	0	0	0
							0	0	0	0	0	0	0	0
DHU_AH_SET	F	1	0	1	D0	*	0	0	0	0	OG No.			
DHU_DOD_LMT_SET	F	1	0	1	D1	*	0	0	BATTERY CAPACITY					
DHU_BSV-SDW_SET	F	1	0	1	D2	*	0	BATTERY DOD DATA						
							BAT BUS V							

Table C-2 BC Command List (3/26)

DHU | **IC-Code : 01**

BC Name	BC F/V Spec	BC Size (byte)	Specifier (byte)	Parameter (byte)	Code		BC Bit							
					DC (HEX)	BC (HEX)	MSB B0	B1	B2	B3	B4	B5	B6	LSB B7
DHU_PWR-SDW_MD1_SET	F	1	0	1	D3	*	UVC MODE1 POWER DATA							
DHU_PWR-SDW_MD2_SET	F	1	0	1	D4	*	UVC MODE2 POWER DATA							
DHU_PWR-SDW_MD3_SET	F	1	0	1	D5	*	UVC MODE3 POWER DATA							

Table C-2 BC Command List (4/26)

AOCE | **IC-Code : 02**

BC Name	BC F/V Spec	BC Size (byte)	Speci-fier (byte)	Para-meter (byte)	Code		BC Bit							
					DC (HEX)	BC (HEX)	MSB B0	B1	B2	B3	B4	B5	B6	LSB B7
AOCE_CONFIG_BC	F	1	0	1	35	*	DATA							
AOCE_EEPROM_WRT	V	133	0	133	D5	*	DATA							
AOCE_CPU_RAM_WRT	V	133	0	133	D6	*	DATA							
AOCE_EEPROM_DMP	F	5	0	5	D7	*	DATA							
AOCE_CPU_RAM_DMP	F	5	0	5	D8	*	DATA							
AOCE_CPU_RAM_IPL	F	8	0	8	DA	*	DATA							
AOCE_CPU-A_TEST_CMD	V	6	0	6	F2	*	DATA							
AOCE_CPU-B_TEST_CMD	V	6	0	6	F3	*	DATA							
AOCE_SRCH_EN	F	2	0	2	FA	*	DATA							
AOCE_IP/PC_EN	F	1	0	1	CD	*	DATA							
AOCE_AOCS_BC	V	12	0	12	D9	*	DATA							
AOCE_SSC_BC	F	2	1	1	D9	13	DATA							
AOCE_OMS_MBT	F	3	1	2	D9	15	DATA							
AOCE_IP_PC	F	4	1	3	D9	17	DATA							
AOCE_IP_PC_TRACK1	F	6	1	5	D9	18	DATA							
AOCE_IP_PC_TRACK2	F	7	1	6	D9	19	DATA							
AOCE_ACM-A_BIAS	F	3	1	2	D9	21	DATA							
AOCE_ACM-B_BIAS	F	3	1	2	D9	22	DATA							
AOCE_ACM-C_BIAS	F	3	1	2	D9	23	DATA							
AOCE_ACM-D_BIAS	F	3	1	2	D9	24	DATA							
AOCE_ACM-A_SF	F	3	1	2	D9	25	DATA							
AOCE_ACM-B_SF	F	3	1	2	D9	26	DATA							
AOCE_ACM-C_SF	F	3	1	2	D9	27	DATA							
AOCE_ACM-D_SF	F	3	1	2	D9	28	DATA							
AOCE_GRS-A_BIAS	F	3	1	2	D9	29	DATA							
AOCE_GRS-B_BIAS	F	3	1	2	D9	2A	DATA							
AOCE_GRS-A_SF	F	3	1	2	D9	2B	DATA							
AOCE_GRS-B_SF	F	3	1	2	D9	2C	DATA							
AOCE_AUTO_DV_PRM1	F	4	1	3	D9	30	DATA							
AOCE_AUTO_DV_PRM2	F	6	1	5	D9	31	DATA							
AOCE_ANC	F	5	1	4	D9	32	DATA							
AOCE_PULSE_MOD	F	7	1	6	D9	33	DATA							
AOCE_WATCH_SAS_SEL	F	2	1	1	D9	34	DATA							
AOCE_NO_SAS_TIME	F	2	1	1	D9	35	DATA							
AOCE_SACQ_EXE_ANG	F	2	1	1	D9	36	DATA							
AOCE_SANG_LIMIT	F	4	1	3	D9	37	DATA							
AOCE_OMS_INTG_ETIME	F	2	1	1	D9	38	DATA							
AOCE_DV_ACM	F	2	1	1	D9	39	DATA							
AOCE_NTO_DEPL	F	5	1	4	D9	3A	DATA							
AOCE_INJ-CTL-REF	F	2	1	1	D9	3B	DATA							
AOCE_SSAS_CAL1	F	4	1	3	D9	43	DATA							
AOCE_SSAS_CAL2	F	5	1	4	D9	44	DATA							
AOCE_DRIFT_CHK_PRM	F	5	1	4	D9	47	DATA							
AOCE_TLM_OUT_SAS	F	2	1	1	D9	48	DATA							
AOCE_SSC_PHS_MASK	F	4	1	3	D9	4A	DATA							

Table C-2 BC Command List (5/26)

AOCE | **IC-Code : 02**

BC Name	BC F/V Spec	BC Size (byte)	Speci-fier (byte)	Para-meter (byte)	Code		BC Bit							
					DC (HEX)	BC (HEX)	MSB B0	B1	B2	B3	B4	B5	B6	LSB B7
AOCE_SSC_TLM_THR	F	2	1	1	D9	4B	DATA							
AOCE_AT-DV_BIAS_EST	F	5	1	4	D9	50	DATA							
AOCE_ACM-D_INTG_TIM	F	5	1	4	D9	51	DATA							
AOCE_ANC_EXE_TIME	F	7	1	6	D9	52	DATA							
AOCE_ACM_BIAS_ETIME	F	5	1	4	D9	53	DATA							
AOCE_AT-DV_PRM_GEN	F	3	1	2	D9	54	DATA							
AOCE_INJ-CTL_ETIME	F	3	1	2	D9	55	DATA							
AOCE_RCS_MEM_SEL0	F	2	1	1	D9	70	DATA							
AOCE_RCS_MEM_SEL1	F	2	1	1	D9	71	DATA							
AOCE_RCS_MEM_SEL2	F	2	1	1	D9	72	DATA							
AOCE_RCS_MEM_SEL3	F	2	1	1	D9	73	DATA							
AOCE_RCS_MEM_SEL4	F	2	1	1	D9	74	DATA							
AOCE_RCS_MEM_SEL5	F	2	1	1	D9	75	DATA							
AOCE_RCS_MEM_SEL6	F	2	1	1	D9	76	DATA							
AOCE_RCS_MEM_SEL7	F	2	1	1	D9	77	DATA							
AOCE_SPN_CNT_MEM0-1	F	7	1	6	D9	80	DATA							
AOCE_SPN_CNT_MEM1-1	F	7	1	6	D9	81	DATA							
AOCE_SPN_CNT_MEM2-1	F	7	1	6	D9	82	DATA							
AOCE_SPN_CNT_MEM3-1	F	7	1	6	D9	83	DATA							
AOCE_SPN_CNT_MEM4-1	F	7	1	6	D9	84	DATA							
AOCE_SPN_CNT_MEM5-1	F	7	1	6	D9	85	DATA							
AOCE_SPN_CNT_MEM6-1	F	7	1	6	D9	86	DATA							
AOCE_SPN_CNT_MEM7-1	F	7	1	6	D9	87	DATA							
AOCE_SPN_CNT_MEM0-2	F	7	1	6	D9	88	DATA							
AOCE_SPN_CNT_MEM1-2	F	7	1	6	D9	89	DATA							
AOCE_SPN_CNT_MEM2-2	F	7	1	6	D9	8A	DATA							
AOCE_SPN_CNT_MEM3-2	F	7	1	6	D9	8B	DATA							
AOCE_SPN_CNT_MEM4-2	F	7	1	6	D9	8C	DATA							
AOCE_SPN_CNT_MEM5-2	F	7	1	6	D9	8D	DATA							
AOCE_SPN_CNT_MEM6-2	F	7	1	6	D9	8E	DATA							
AOCE_SPN_CNT_MEM7-2	F	7	1	6	D9	8F	DATA							
AOCE_REORI_MEM0-1	F	7	1	6	D9	90	DATA							
AOCE_REORI_MEM1-1	F	7	1	6	D9	91	DATA							
AOCE_REORI_MEM2-1	F	7	1	6	D9	92	DATA							
AOCE_REORI_MEM3-1	F	7	1	6	D9	93	DATA							
AOCE_REORI_MEM4-1	F	7	1	6	D9	94	DATA							
AOCE_REORI_MEM5-1	F	7	1	6	D9	95	DATA							
AOCE_REORI_MEM6-1	F	7	1	6	D9	96	DATA							
AOCE_REORI_MEM7-1	F	7	1	6	D9	97	DATA							
AOCE_REORI_MEM0-2	F	7	1	6	D9	98	DATA							
AOCE_REORI_MEM1-2	F	7	1	6	D9	99	DATA							
AOCE_REORI_MEM2-2	F	7	1	6	D9	9A	DATA							
AOCE_REORI_MEM3-2	F	7	1	6	D9	9B	DATA							
AOCE_REORI_MEM4-2	F	7	1	6	D9	9C	DATA							
AOCE_REORI_MEM5-2	F	7	1	6	D9	9D	DATA							

Table C-2 BC Command List (6/26)

AOCE | IC-Code : 02

BC Name	BC F/V Spec	BC Size (byte)	Speci-fier (byte)	Para-meter (byte)	Code DC (HEX)	Code BC (HEX)	BC Bit MSB B0	B1	B2	B3	B4	B5	B6	LSB B7
AOCE_REORI_MEM6-2	F	7	1	6	D9	9E	DATA							
AOCE_REORI_MEM7-2	F	7	1	6	D9	9F	DATA							
AOCE_AXDV_MEM0-1	F	7	1	6	D9	A0	DATA							
AOCE_AXDV_MEM1-1	F	7	1	6	D9	A1	DATA							
AOCE_AXDV_MEM2-1	F	7	1	6	D9	A2	DATA							
AOCE_AXDV_MEM3-1	F	7	1	6	D9	A3	DATA							
AOCE_AXDV_MEM4-1	F	7	1	6	D9	A4	DATA							
AOCE_AXDV_MEM5-1	F	7	1	6	D9	A5	DATA							
AOCE_AXDV_MEM6-1	F	7	1	6	D9	A6	DATA							
AOCE_AXDV_MEM7-1	F	7	1	6	D9	A7	DATA							
AOCE_AXDV_MEM0-2	F	7	1	6	D9	A8	DATA							
AOCE_AXDV_MEM1-2	F	7	1	6	D9	A9	DATA							
AOCE_AXDV_MEM2-2	F	7	1	6	D9	AA	DATA							
AOCE_AXDV_MEM3-2	F	7	1	6	D9	AB	DATA							
AOCE_AXDV_MEM4-2	F	7	1	6	D9	AC	DATA							
AOCE_AXDV_MEM5-2	F	7	1	6	D9	AD	DATA							
AOCE_AXDV_MEM6-2	F	7	1	6	D9	AE	DATA							
AOCE_AXDV_MEM7-2	F	7	1	6	D9	AF	DATA							
AOCE_RDDV_MEM0-1	F	7	1	6	D9	B0	DATA							
AOCE_RDDV_MEM1-1	F	7	1	6	D9	B1	DATA							
AOCE_RDDV_MEM2-1	F	7	1	6	D9	B2	DATA							
AOCE_RDDV_MEM3-1	F	7	1	6	D9	B3	DATA							
AOCE_RDDV_MEM4-1	F	7	1	6	D9	B4	DATA							
AOCE_RDDV_MEM5-1	F	7	1	6	D9	B5	DATA							
AOCE_RDDV_MEM6-1	F	7	1	6	D9	B6	DATA							
AOCE_RDDV_MEM7-1	F	7	1	6	D9	B7	DATA							
AOCE_RDDV_MEM0-2	F	7	1	6	D9	B8	DATA							
AOCE_RDDV_MEM1-2	F	7	1	6	D9	B9	DATA							
AOCE_RDDV_MEM2-2	F	7	1	6	D9	BA	DATA							
AOCE_RDDV_MEM3-2	F	7	1	6	D9	BB	DATA							
AOCE_RDDV_MEM4-2	F	7	1	6	D9	BC	DATA							
AOCE_RDDV_MEM5-2	F	7	1	6	D9	BD	DATA							
AOCE_RDDV_MEM6-2	F	7	1	6	D9	BE	DATA							
AOCE_RDDV_MEM7-2	F	7	1	6	D9	BF	DATA							
AOCE_OMSDV_MEM0-1	F	7	1	6	D9	C0	DATA							
AOCE_OMSDV_MEM1-1	F	7	1	6	D9	C1	DATA							
AOCE_OMSDV_MEM2-1	F	7	1	6	D9	C2	DATA							
AOCE_OMSDV_MEM3-1	F	7	1	6	D9	C3	DATA							
AOCE_OMSDV_MEM4-1	F	7	1	6	D9	C4	DATA							
AOCE_OMSDV_MEM5-1	F	7	1	6	D9	C5	DATA							
AOCE_OMSDV_MEM6-1	F	7	1	6	D9	C6	DATA							
AOCE_OMSDV_MEM7-1	F	7	1	6	D9	C7	DATA							
AOCE_OMSDV_MEM0-2	F	7	1	6	D9	C8	DATA							
AOCE_OMSDV_MEM1-2	F	7	1	6	D9	C9	DATA							
AOCE_OMSDV_MEM2-2	F	7	1	6	D9	CA	DATA							

Table C-2 BC Command List (7/26)

AOCE | IC-Code : 02

BC Name	BC F/V Spec	BC Size (byte)	Specifier (byte)	Parameter (byte)	Code		BC Bit							
					DC (HEX)	BC (HEX)	MSB B0	B1	B2	B3	B4	B5	B6	LSB B7
AOCE_OMSDV_MEM3-2	F	7	1	6	D9	CB	DATA							
AOCE_OMSDV_MEM4-2	F	7	1	6	D9	CC	DATA							
AOCE_OMSDV_MEM5-2	F	7	1	6	D9	CD	DATA							
AOCE_OMSDV_MEM6-2	F	7	1	6	D9	CE	DATA							
AOCE_OMSDV_MEM7-2	F	7	1	6	D9	CF	DATA							
AOCE_MANUCTL_MEM0-1	F	7	1	6	D9	D0	DATA							
AOCE_MANUCTL_MEM1-1	F	7	1	6	D9	D1	DATA							
AOCE_MANUCTL_MEM2-1	F	7	1	6	D9	D2	DATA							
AOCE_MANUCTL_MEM3-1	F	7	1	6	D9	D3	DATA							
AOCE_MANUCTL_MEM4-1	F	7	1	6	D9	D4	DATA							
AOCE_MANUCTL_MEM5-1	F	7	1	6	D9	D5	DATA							
AOCE_MANUCTL_MEM6-1	F	7	1	6	D9	D6	DATA							
AOCE_MANUCTL_MEM7-1	F	7	1	6	D9	D7	DATA							
AOCE_MANUCTL_MEM0-2	F	7	1	6	D9	D8	DATA							
AOCE_MANUCTL_MEM1-2	F	7	1	6	D9	D9	DATA							
AOCE_MANUCTL_MEM2-2	F	7	1	6	D9	DA	DATA							
AOCE_MANUCTL_MEM3-2	F	7	1	6	D9	DB	DATA							
AOCE_MANUCTL_MEM4-2	F	7	1	6	D9	DC	DATA							
AOCE_MANUCTL_MEM5-2	F	7	1	6	D9	DD	DATA							
AOCE_MANUCTL_MEM6-2	F	7	1	6	D9	DE	DATA							
AOCE_MANUCTL_MEM7-2	F	7	1	6	D9	DF	DATA							
AOCE_AT-CTL_PRM	F	5	1	4	D9	2F	DATA							
AOCE_SSC_PHASE_OFSET	F	5	1	4	D9	3D	DATA							
AOCE_ERT-ACQ1	F	7	1	6	D9	3E	DATA							
AOCE_ERT-ACQ2	F	7	1	6	D9	3F	DATA							
AOCE_ERT-SRCH1	F	7	1	6	D9	4D	DATA							
AOCE_ERT-SRCH2	F	7	1	6	D9	4E	DATA							
AOCE_ERT-SRCH3	F	6	1	5	D9	4F	DATA							
AOCE_BKUP-ERT-TRK1	F	7	1	6	D9	5C	DATA							
AOCE_BKUP-ERT-TRK2	F	7	1	6	D9	5D	DATA							
AOCE_BKUP-ERT-TRK3	F	7	1	6	D9	5E	DATA							
AOCE_BKUP-ERT-TRK4	F	6	1	5	D9	5F	DATA							
AOCE_AT-SACQ-PRM1	F	7	1	6	D9	60	DATA							
AOCE_AT-SACQ-PRM2	F	7	1	6	D9	61	DATA							
AOCE_SUN-OFS-PRM1	F	7	1	6	D9	66	DATA							
AOCE_SUN-OFS-PRM2	F	7	1	6	D9	67	DATA							
AOCE_ROM_MEM_READ	F	7	1	6	D9	F1	DATA							
AOCE_ROM_MEM_WRT	F	7	1	6	D9	F2	DATA							
AOCE_ROM_PORT_READ	F	7	1	6	D9	F3	DATA							
AOCE_ROM_PORT_WRT_2	F	7	1	6	D9	F4	DATA							
AOCE_ROM_PORT_WRT_1	F	7	1	6	D9	F5	DATA							

Table C-2 BC Command List (8/26)

TCI | ***IC-Code : 03***

BC Name	BC F/V Spec	BC Size (byte)	Specifier (byte)	Parameter (byte)	Code		BC Bit							
					DC (HEX)	BC (HEX)	MSB B0	B1	B2	B3	B4	B5	B6	LSB B7
TCI_SPM_TH_CNT_SET	F	2	0	2	B0	*	SPM THRESHOLD DATA (H)							
							SPM THRESHOLD DATA (L)							

Table C-2 BC Command List (9/26)

HCE | **IC-Code : 04**

BC Name	BC F/V Spec	BC Size (byte)	Specifier (byte)	Parameter (byte)	Code DC (HEX)	Code BC (HEX)	BC Bit MSB B0	B1	B2	B3	B4	B5	B6	LSB B7
HCE_TEMP_HI_BC_EN	F	2	0	2	33	*	THRESHOLD DATA(H)							
HCE_TEMP_LO_BC_EN	F	2	0	2	34	*	THRESHOLD DATA(L)							
HCE_HTR_AUTO_EN	F	1	0	1	39	*	HTR GH							
HCE_HTR_ON_EN	F	1	0	1	3B	*	HTR CH							
HCE_HTR_OFF_EN	F	1	0	1	3D	*	HTR CH							

Table C-2 BC Command List (10/26)

PCD | **IC-Code : 05**

BC Name	BC F/V Spec	BC Size (byte)	Specifier (byte)	Parameter (byte)	Code		BC Bit							
					DC (HEX)	BC (HEX)	MSB B0	B1	B2	B3	B4	B5	B6	LSB B7
PCD_BAT-A_K1_SET	F	1	0	1	31	*	BAT-A K1 DATA							
PCD_BAT-A_K2_SET	F	1	0	1	32	*	BAT-A K2 DATA							
PCD_BAT-A_C/D_SET	F	1	0	1	33	*	BAT-A C/D DATA							
PCD_BAT-B_C/D_SET	F	1	0	1	34	*	BAT-B C/D DATA							
PCD_BAT-B_K1_SET	F	1	0	1	35	*	BAT-B K1 DATA							
PCD_BAT-B_K2_SET	F	1	0	1	36	*	BAT-B K2 DATA							

Table C-2 BC Command List (11/26)

DR | **IC-Code : 06**

BC Name	BC F/V Spec	BC Size (byte)	Specifier (byte)	Parameter (byte)	Code		BC Bit							
					DC (HEX)	BC (HEX)	MSB B0	B1	B2	B3	B4	B5	B6	LSB B7
DR_MEM_BLK0_ON	F	1	1	0	60	01	0	0	0	0	MB3	MB2	MB1	MB0
DR_MEM_BLK1_ON	F	1	1	0	60	02	0	0	0	0	MB3	MB2	MB1	MB0
DR_MEM_BLK2_ON	F	1	1	0	60	04	0	0	0	0	MB3	MB2	MB1	MB0
DR_MEM_BLK3_ON	F	1	1	0	60	08	0	0	0	0	MB3	MB2	MB1	MB0
DR_MEM_BLK0_OFF	F	1	1	0	61	01	0	0	0	0	MB3	MB2	MB1	MB0
DR_MEM_BLK1_OFF	F	1	1	0	61	02	0	0	0	0	MB3	MB2	MB1	MB0
DR_MEM_BLK2_OFF	F	1	1	0	61	04	0	0	0	0	MB3	MB2	MB1	MB0
DR_MEM_BLK3_OFF	F	1	1	0	61	08								

Table C-2 BC Command List (12/26)

PSA | **IC-Code : 07**

BC Name	BC F/V Spec	BC Size (byte)	Speci-fier (byte)	Para-meter (byte)	Code		BC Bit							
					DC (HEX)	BC (HEX)	MSB B0	B1	B2	B3	B4	B5	B6	LSB B7
PSA_ISA_CNT_SET	F	1	0	1	63	*								
PAX_HV_ON_SET	F	1	0	1	42	*								
XUV_HV_MCP_ON	F	1	1	0	42	01								
ISA_HV_SV_ON	F	1	1	0	42	02								
ISA_HV_MCP_ON	F	1	1	0	42	04								
ESA_HV_SV_ON	F	1	1	0	42	08								
ESA_HV_MCP_ON	F	1	1	0	42	10								
PAX_HV_ENA_SET	F	1	0	1	40	*								
XUV_HV_MCP_ENA	F	1	1	0	40	01								
ISA_HV_SV_ENA	F	1	1	0	40	02								
ISA_HV_MCP_ENA	F	1	1	0	40	04								
ESA_HV_SV_ENA	F	1	1	0	40	08								
ESA_HV_MCP_ENA	F	1	1	0	40	10								
PAX_HV_OFF_SET	F	1	0	1	44	*								
XUV_HV_OFF	F	1	1	0	44	01								
ISA_HV_SV_OFF	F	1	1	0	44	02								
ISA_HV_MCP_OFF	F	1	1	0	44	04								
ESA_HV_SV_OFF	F	1	1	0	44	08								
ESA_HV_MCP_OFF	F	1	1	0	44	10								
PAX_HV_SET	F	2	0	2	60	*								
XUV_HV_SET	F	2	1	1	60	01								
ISA_SV_TBL_SET	F	2	1	1	60	02								
ISA_HV_MCP_SET	F	2	1	1	60	04								
ESA_SV_TBL_SET	F	2	1	1	60	08								
ESA_HV_MCP_SET	F	2	1	1	60	10								
ISA_HV_SV_SET	F	2	1	1	60	20								
ESA_HV_SV_SET	F	2	1	1	60	40								
PAX_HV_SCAN_SET	F	2	0	2	50	*								
XUV_SCAN_L_SET	F	2	1	1	50	01								
XUV_SCAN_H_SET	F	2	1	1	50	81								
ISA_SCAN_L_SET	F	2	1	1	50	04								
ISA_SCAN_H_SET	F	2	1	1	50	84								
ESA_SCAN_L_SET	F	2	1	1	50	10								
ESA_SCAN_H_SET	F	2	1	1	50	90								
PSA_H32_CNT_SET	F	1	0	1	46	*								
PSA_H32_RESET	F	1	1	0	46	81								
PSA_H32_RUN	F	1	1	0	46	83								
PSA_H32_HALT	F	1	1	0	46	02								
PSA_H32_RUN_INH_ENA	F	1	1	0	46	87								
PSA_H32_RUN_INH_DIS	F	1	1	0	46	83								
PAX_CNT_SET	F	2	0	2	61	*								
PSA_H32_ST_ADRS_SET	F	4	0	4	4A	*								
ESA_CNT_SET	F	1	0	1	62	*								
ISA_CNT_SET	F	1	0	1	63	*								
XUV_FOV_SET	F	1	0	1	64	*								

Table C-2 BC Command List (13/26)

PSA | **IC-Code : 07**

BC Name	BC F/V Spec	BC Size (byte)	Specifier (byte)	Parameter (byte)	Code		BC Bit							
					DC (HEX)	BC (HEX)	MSB B0	B1	B2	B3	B4	B5	B6	LSB B7
PSA_ACTIVATE	F	1	0	1	E0	*								
PSA_SHUTDOWN	F	1	0	1	C0	*								
EIS_DET_FIX	F	1	0	1	92	*								
EIS_HV_ENA_SET	F	1	0	1	82	*								
EIS_SSD_HV_ENA	F	1	1	0	82	01								
EIS_MCP_HV_ENA	F	1	1	0	82	02								
EIS_HV_DIS_SET	F	1	0	1	A2	*								
EIS_SSD_HV_DIS	F	1	1	0	A2	01								
EIS_MCP_HV_DIS	F	1	1	0	A2	02								
EIS_HV_ON_SET	F	1	0	1	84	*								
EIS_SSD_HV_ON	F	1	1	0	84	01								
EIS_MCP_HV_ON	F	1	1	0	84	02								
EIS_HV_OFF_SET	F	1	0	1	A4	*								
EIS_SSD_HV_OFF	F	1	1	0	A4	01								
EIS_MCP_HV_OFF	F	1	1	0	A4	02								
EIS_HV_CTL_SET	F	2	0	2	8E	*								
EIS_SSD_HV_SEL	F	2	1	1	8E	01								
EIS_MCP_HV_SEL	F	2	1	1	8E	02								
EIS_DISC_SET	F	1	0	1	8C	*								
EIS_CNT_SET	V	8	0	8	90	*								
EIS_TABLE_DUMP	F	3	1	2	90	01								
EIS_AUTO_INTEG	F	1	1	0	90	02								
EIS_MODE_CHANGE	F	2	1	1	90	04								
EIS_INTEG_TIME_CHG	F	3	1	2	90	08								
EIS_DE_LINE_SHIFT	F	7	1	6	90	10								
EIS_E_LINE_SHIFT_ED	F	3	1	2	90	20								
EIS_TOF_LINE_SHIFT	F	5	1	4	90	40								
EIS_E_LINE_SHIFT_ET	F	2	1	1	90	80								

Table C-2 BC Command List (14/26)

PWA | **IC-Code : 08**

BC Name	BC F/V Spec	BC Size (byte)	Specifier (byte)	Parameter (byte)	Code DC (HEX)	Code BC (HEX)	BC Bit MSB B0	B1	B2	B3	B4	B5	B6	LSB B7
PWA_LFA_ON	F	1	1	0	30	80	1							
PWA_LFA_CAL_ON	F	1	1	0	30	40		1						
PWA_LFA_DCAL_ON	F	1	1	0	30	20			1					
PWA_LFA_BIAS_ON	F	1	1	0	30	10				1				
PWA_LFA_CLK_PWS	F	1	1	0	30	08					1			
PWA_LFA_EMGNCY_ON	F	1	1	0	30	01								1
PWA_LFA_OFF	F	1	1	0	32	80	1							
PWA_LFA_CAL_OFF	F	1	1	0	32	40		1						
PWA_LFA_DCAL_OFF	F	1	1	0	32	20			1					
PWA_LFA_BIAS_OFF	F	1	1	0	32	10				1				
PWA_LFA_CLK_LFA	F	1	1	0	32	08					1			
PWA_LFA_EMGNCY_OFF	F	1	1	0	32	01								1
PWA_LFA_BIAS_SET	F	1	0	1	34	*								
PWA_LFA_BANK_SET	F	1	0	1	36	*								
PWA_LFA_ALL_BNK_ENA	F	1	1	0	36	90	1			1	0	0	0	0
PWA_LFA_ALL_BNK_DIS	F	1	1	0	36	10	0			1	0	0	0	0
PWA_LFA_ALL_BNK_CLR	F	1	1	0	36	D0		1		1	0	0	0	0
PWA_LFA_ALL_BNK_CHK	F	1	1	0	36	B0			1	1	0	0	0	0
(LFA_SET_ONE_BANK)										0	?	?	?	?
(LFA_SET_ALL_BANK)										1	0	0	0	0
(LFA_BANK_ENA)							1							
(LFA_BANK_DIS)							0							
(LFA_BANK_CLR)								1						
(LFA_BANK_CHK)									1					
PWA_LFA_GAIN_SET	F	1	0	1	38	*								
(LFA_GAIN_SPB)									1					
(LFA_GAIN_DPB)									0					
(LFA_GAIN_EX)										1				
(LFA_GAIN_EY)										0				
(LFA_GAIN_WFCM_H)											1	0		
(LFA_GAIN_WFCM_M)											0	1		
(LFA_GAIN_WFCM_L)											0	0		
(LFA_GAIN_WFCD_H)													1	
(LFA_GAIN_WFCD_L)													0	
(LFA_GAIN_OFA_H)														1
(LFA_GAIN_OFA_L)														0
PWA_LFA_FIFO_RST_WE	F	1	1	0	3A	90	1			1				
PWA_LFA_ADC_CAL_WE	F	1	1	0	3A	50		1		1				
PWA_LFA_DSP_INT_WE	F	1	1	0	3A	30			1	1				
PWA_LFA_DSP_WDT_ENA	F	1	1	0	3A	10				1				
PWA_LFA_DSP_RUN_WE	F	1	1	0	3A	18				1	1			
PWA_LFA_DSP_HLD_WE	F	1	1	0	3A	14				1		1		
PWA_LFA_DSP_RST_WE	F	1	1	0	3A	12				1			1	
PWA_LFA_DSP_MCHK_WE	F	1	1	0	3A	11				1				1
PWA_LFA_FIFO_RST_WD	F	1	1	0	3A	80	1			0				

Table C-2 BC Command List (15/26)

PWA | IC-Code : 08

BC Name	BC F/V Spec	BC Size (byte)	Specifier (byte)	Parameter (byte)	Code DC (HEX)	Code BC (HEX)	BC Bit MSB B0	B1	B2	B3	B4	B5	B6	LSB B7
PWA_LFA_ADC_CAL_WD	F	1	1	0	3A	40		1		0				
PWA_LFA_DSP_INT_WD	F	1	1	0	3A	20			1	0				
PWA_LFA_DSP_WDT_DIS	F	1	1	0	3A	00				0				
PWA_LFA_DSP_RUN_WD	F	1	1	0	3A	08				0	1			
PWA_LFA_DSP_HLD_WD	F	1	1	0	3A	04				0		1		
PWA_LFA_DSP_RST_WD	F	1	1	0	3A	02				0			1	
PWA_LFA_DSP_MCHK_WD	F	1	1	0	3A	01				0				1
PWA_LFA_CAL_SET	F	1	0	1	3C	*							1	0
(LFA_CAL_0)													0	1
(LFA_CAL_-20)													0	0
(LFA_CAL_-40)														
(LFA_OFFSET)							?	?	?	?	?	?		
PWA_LFA_OFA_MODE_ST	F	1	0	1	3E	*								
(LFA_OFA_SEL)							?							
(LFA_OFA_T_MODE)								?	?					
(LFA_OFA_T_FMT)										?	?			
(LFA_OFA_F_MODE)												?		
(LFA_OFA_F_FMT)													?	?
PWA_LFA_WFCM_REC	F	3	0	3	40	*								
PWA_LFA_WFCM_REC_ST	F	3	3	0	40	00000F	?	?	?	?	?	?	?	?
(START_TI_HIGH)							?	?	?	?	?	?	?	?
(START_TI_LOW)							?	?	?	?				
(START_BANK)											?	?	?	?
(STOP_BANK)														
PWA_LFA_WFCM_AD_SET	F	1	0	1	42	*								
PWA_LFA_RD_SET_STRT	F	1	1	0	42	00								
PWA_LFA_RD_SET_END	F	1	1	0	42	FF	?	?	?	?				
(START_ADR)											?	?	?	?
(STOP_ADR)														
PWA_LFA_CMPR_SET	F	1	0	1	44	*								
(LFA_WFCM_CDC_ON)							1							
(LFA_WFCM_CDC_OF)							0							
(LFA_WFCD_CDC_ON)								1						
(LFA_WFCD_CDC_OF)								0						
(LFA_WFCD_FL_AVR)									1					
(LFA_WFCD_FL_LPF)									0					
(LFA_WFCD_FL_AVR_E)										1				
(LFA_WFCD_FL_LPF_E)										0				
PWA_LFA_AGC_SET	F	3	0	3	46	*								
(LFA_AGC_ENA_DIS)							?							
(LFA_AGC_SEL)								?	?					
(LFA_AGC_TIME)										?	?	?	?	?
(LFA_AGC_MODE)							?	?	?	?	?	?	?	?
(LFA_AGC_MODE)							?	?	?	?	?	?	?	?
PWA_LFA_OBS_SET	F	1	0	1	48	*								

Table C-2 BC Command List (16/26)

PWA | IC-Code : 08

BC Name	BC F/V Spec	BC Size (byte)	Specifier (byte)	Parameter (byte)	Code DC (HEX)	Code BC (HEX)	BC Bit MSB B0	B1	B2	B3	B4	B5	B6	LSB B7
PWA_LFA_CHG_DP	F	1	1	0	48	00								
PWA_LFA_CHG_SP	F	1	1	0	48	01								
PWA_LFA_NOMINAL_DP	F	1	1	0	48	10								
PWA_LFA_NOMINAL_SP	F	1	1	0	48	11								
PWA_LFA_AUTO_CAL	F	1	1	0	48	20								
PWA_LFA_OFA_EY	F	1	1	0	48	30								
PWA_LFA_OFA_EX	F	1	1	0	48	31								
PWA_LFA_OFA_GAIN_L	F	1	1	0	48	40								
PWA_LFA_OFA_GAIN_H	F	1	1	0	48	41								
PWA_LFA_WFCM_GAIN_L	F	1	1	0	48	50								
PWA_LFA_WFCM_GAIN_M	F	1	1	0	48	51								
PWA_LFA_WFCM_GAIN_H	F	1	1	0	48	52								
PWA_LFA_WFCD_GAIN_L	F	1	1	0	48	60								
PWA_LFA_WFCD_GAIN_H	F	1	1	0	48	61								
PWA_LFA_WFCD_DPB	F	1	1	0	48	70								
PWA_LFA_WFCD_SPB	F	1	1	0	48	71								
PWA_LFA_SW_1KHZ	F	1	1	0	48	81								
PWA_LFA_SW_2KHZ	F	1	1	0	48	82								
PWA_LFA_SW_4KHZ	F	1	1	0	48	84								
PWA_LFA_SW_8KHZ	F	1	1	0	48	88								
PWA_LFA_RESUME	F	1	1	0	48	90								
PWA_LFA_WFCH_REC	F	3	0	3	4A	*								
PWA_LFA_WFCH_REC_ST	F	3	3	0	4A	000000								
(START_TI_HIGH)							?	?	?	?	?	?	?	?
(START_TI_LOW)							?	?	?	?	?	?	?	?
(E_THRESHOLD)							?	?	?	?	?	?	?	?
PWA_PAC_FRM_SET	F	1	0	1	76	*								
PWA_PAC_FRM_PWS	F	1	1	0	76	01								
PWA_PAC_FRM_LFA	F	1	1	0	76	02								
PWA_PAC_FRM_WFCM	F	1	1	0	76	03								
PWA_PWS_RLY_ON_SET	F	4	0	4	90	*								
							CAL13	CAL24	GND_CAL	LVL_CAL	PHS_CAL	SPW_CAL	NEI_CAL	ALT_CAL
							*	CENTER	LOAD	PAMP_H/L	CBANK4	CBANK3	CBANK2	CBANK1
							*	*	*	ANT	TXL_PWR	WPRE24	WPRE13	NEI_PWR
							*	*	*	DET_GND	FIL_GND	RF_DIV	NEI_SIG	POL_SIG
PWA_PWS_RLY_OFF_SET	F	4	0	4	92	*								
							CAL13	CAL24	GND_CAL	LVL_CAL	PHS_CAL	SPW_CAL	NEI_CAL	ALT_CAL
							*	CENTER	LOAD	PAMP_H/L	CBANK4	CBANK3	CBANK2	CBANK1
							*	*	*	ANT	TXL_PWR	WPRE24	WPRE13	NEI_PWR
							*	*	*	DET_GND	FIL_GND	RF_DIV	NEI_SIG	POL_SIG
PWA_PWS_MODE_SET	F	1	0	1	94	*								
PWA_PWS_IDLE	F	1	1	0	94	F0								
PWA_PWS_DS	F	1	1	0	94	00								
PWA_PWS_PL	F	1	1	0	94	10								
PWA_PWS_NEI	F	1	1	0	94	20								

Table C-2 BC Command List (17/26)

PWA | IC-Code : 08

BC Name	BC F/V Spec	BC Size (byte)	Specifier (byte)	Parameter (byte)	Code DC (HEX)	Code BC (HEX)	BC Bit MSB B0	B1	B2	B3	B4	B5	B6	LSB B7
PWA_PWS_SPWN25	F	1	1	0	94	80								
PWA_PWS_SPWN50	F	1	1	0	94	81								
PWA_PWS_SPWN75	F	1	1	0	94	82								
PWA_PWS_SPWN100	F	1	1	0	94	83								
PWA_PWS_SPWN150	F	1	1	0	94	84								
PWA_PWS_SPWN200	F	1	1	0	94	85								
PWA_PWS_SPWN250	F	1	1	0	94	86								
PWA_PWS_SPWN25T	F	1	1	0	94	8C								
PWA_PWS_SPWN50T	F	1	1	0	94	8D								
PWA_PWS_SPWN_NT	F	1	1	0	94	8E								
PWA_PWS_SPWH25	F	1	1	0	94	90								
PWA_PWS_SPWH50	F	1	1	0	94	91								
PWA_PWS_SPWH75	F	1	1	0	94	92								
PWA_PWS_SPWH100	F	1	1	0	94	93								
PWA_PWS_SPWH150	F	1	1	0	94	94								
PWA_PWS_SPWH200	F	1	1	0	94	95								
PWA_PWS_SPWH250	F	1	1	0	94	96								
PWA_PWS_SPWH25T	F	1	1	0	94	9C								
PWA_PWS_SPWH50T	F	1	1	0	94	9D								
PWA_PWS_SPWH_NT	F	1	1	0	94	9E								
PWA_PWS_ALT25	F	1	1	0	94	A0								
PWA_PWS_ALT50	F	1	1	0	94	A1								
PWA_PWS_ALT75	F	1	1	0	94	A2								
PWA_PWS_ALT25T	F	1	1	0	94	AC								
PWA_PWS_MENU_SET	F	1	0	1	96	*								
PWA_PWS_AUTO_CAL	F	1	1	0	96	E0								
PWA_PWS_AUTO_GCAL	F	1	1	0	96	E8								
PWA_PWS_AUTO_LCAL	F	1	1	0	96	E9								
PWA_PWS_AUTO_PCAL	F	1	1	0	96	EA								
PWA_PWS_AUTO_NCAL	F	1	1	0	96	EB								
PWA_PWS_AUTO_SCAL	F	1	1	0	96	EC								
PWA_PWS_AUTO_ACAL	F	1	1	0	96	ED								
PWA_PWS_AUTO_IDLE	F	1	1	0	96	F0								
PWA_PWS_AUTO_OFF	F	1	1	0	96	FF								
PWA_PWS_NPW_0	F	1	1	0	96	00								
PWA_PWS_NPW_1	F	1	1	0	96	01								
PWA_PWS_NPW_2	F	1	1	0	96	02								
PWA_PWS_NPW_3	F	1	1	0	96	03								
PWA_PWS_NPW_4	F	1	1	0	96	04								
PWA_PWS_NPW_5	F	1	1	0	96	05								
PWA_PWS_NPW_6	F	1	1	0	96	06								
PWA_PWS_NPW_7	F	1	1	0	96	07								
PWA_PWS_NPW_8	F	1	1	0	96	08								
PWA_PWS_NPW_9	F	1	1	0	96	09								
PWA_PWS_NPW_10	F	1	1	0	96	0A								

Table C-2 BC Command List (18/26)

PWA | **IC-Code : 08**

BC Name	BC F/V Spec	BC Size (byte)	Specifier (byte)	Parameter (byte)	Code		BC Bit							
					DC (HEX)	BC (HEX)	MSB B0	B1	B2	B3	B4	B5	B6	LSB B7
PWA_PWS_NPW_11	F	1	1	0	96	0B								
PWA_PWS_NPW_12	F	1	1	0	96	0C								
PWA_PWS_NPW_13	F	1	1	0	96	0D								
PWA_PWS_NPW_14	F	1	1	0	96	0E								
PWA_PWS_NPW_15	F	1	1	0	96	0F								
PWA_PWS_SPW_0	F	1	1	0	96	80								
PWA_PWS_SPW_1	F	1	1	0	96	81								
PWA_PWS_SPW_2	F	1	1	0	96	82								
PWA_PWS_SPW_3	F	1	1	0	96	83								
PWA_PWS_SPW_4	F	1	1	0	96	84								
PWA_PWS_SPW_5	F	1	1	0	96	85								
PWA_PWS_SPW_6	F	1	1	0	96	86								
PWA_PWS_SPW_7	F	1	1	0	96	87								
PWA_PWS_SPW_8	F	1	1	0	96	88								
PWA_PWS_SPW_9	F	1	1	0	96	89								
PWA_PWS_SPW_10	F	1	1	0	96	8A								
PWA_PWS_SPW_11	F	1	1	0	96	8B								
PWA_PWS_SPW_12	F	1	1	0	96	8C								
PWA_PWS_SPW_13	F	1	1	0	96	8D								
PWA_PWS_SPW_14	F	1	1	0	96	8E								
PWA_PWS_SPW_15	F	1	1	0	96	8F								
PWA_PWS_SPWT_0	F	1	1	0	96	A0								
PWA_PWS_SPWT_1	F	1	1	0	96	A1								
PWA_PWS_SPWT_2	F	1	1	0	96	A2								
PWA_PWS_SPWT_3	F	1	1	0	96	A3								
PWA_PWS_SPWT_4	F	1	1	0	96	A4								
PWA_PWS_SPWT_5	F	1	1	0	96	A5								
PWA_PWS_SPWT_6	F	1	1	0	96	A6								
PWA_PWS_SPWT_7	F	1	1	0	96	A7								
PWA_PWS_SPWT_8	F	1	1	0	96	A8								
PWA_PWS_SPWT_9	F	1	1	0	96	A9								
PWA_PWS_SPWT_10	F	1	1	0	96	AA								
PWA_PWS_SPWT_11	F	1	1	0	96	AB								
PWA_PWS_SPWT_12	F	1	1	0	96	AC								
PWA_PWS_SPWT_13	F	1	1	0	96	AD								
PWA_PWS_SPWT_14	F	1	1	0	96	AE								
PWA_PWS_SPWT_15	F	1	1	0	96	AF								
PWA_PWS_SEQ_0	F	1	1	0	96	C0								
PWA_PWS_SEQ_1	F	1	1	0	96	C1								
PWA_PWS_SEQ_2	F	1	1	0	96	C2								
PWA_PWS_SEQ_3	F	1	1	0	96	C3								
PWA_PWS_SEQ_4	F	1	1	0	96	C4								
PWA_PWS_SEQ_5	F	1	1	0	96	C5								
PWA_PWS_SEQ_6	F	1	1	0	96	C6								
PWA_PWS_SEQ_7	F	1	1	0	96	C7								

Table C-2 BC Command List (19/26)

PWA | ***IC-Code : 08***

BC Name	BC F/V Spec	BC Size (byte)	Speci-fier (byte)	Para-meter (byte)	Code DC (HEX)	Code BC (HEX)	BC Bit MSB B0	B1	B2	B3	B4	B5	B6	LSB B7
PWA_PWS_RX_SET	F	2	0	2	98	*								
							LOCAL							
PWA_PWS_RX_SWP	F	2	1	1	98	00								
							LOCAL							
PWA_PWS_RX_FIX	F	2	1	1	98	07								
							LOCAL							
PWA_PWS_GAIN_SET	F	1	0	1	9A	*								
PWA_PWS_GAIN_H	F	1	1	0	9A	03								
PWA_PWS_GAIN_M	F	1	1	0	9A	02								
PWA_PWS_GAIN_L	F	1	1	0	9A	01								
PWA_PWS_FREQ_SET	F	5	0	5	9E	*								
PWA_PWS_NPW_FREQ_0	F	5	1	4	9E	00								
PWA_PWS_NPW_FREQ_1	F	5	1	4	9E	01								
PWA_PWS_NPW_FREQ_2	F	5	1	4	9E	02								
PWA_PWS_NPW_FREQ_3	F	5	1	4	9E	03								
PWA_PWS_NPW_FREQ_S	F	5	1	4	9E	08								
PWA_PWS_NPW_FREQ_D	F	5	1	4	9E	0F								
PWA_PWS_SPWN_FREQ_0	F	5	1	4	9E	80								
PWA_PWS_SPWN_FREQ_1	F	5	1	4	9E	81								
PWA_PWS_SPWN_FREQ_2	F	5	1	4	9E	82								
PWA_PWS_SPWN_FREQ_3	F	5	1	4	9E	83								
PWA_PWS_SPWN_FREQ_S	F	5	1	4	9E	88								
PWA_PWS_SPWN_FREQ_D	F	5	1	4	9E	8F								
PWA_PWS_SPWH_FREQ	F	5	1	4	9E	90								
PWA_PWS_SPWH_FREQ_S	F	5	1	4	9E	98								
PWA_PWS_SPWH_FREQ_D	F	5	1	4	9E	9F								
PWA_PWS_ALT_FREQ_0	F	5	1	4	9E	A0								
PWA_PWS_ALT_FREQ_1	F	5	1	4	9E	A1								
PWA_PWS_ALT_FREQ_2	F	5	1	4	9E	A2								
PWA_PWS_ALT_FREQ_S	F	5	1	4	9E	A8								
PWA_PWS_ALT_FREQ_SN	F	5	1	4	9E	A9								
PWA_PWS_ALT_FREQ_SW	F	5	1	4	9E	AA								
PWA_PWS_ALT_FREQ_D	F	5	1	4	9E	AF								
PWA_PWS_TX_PC_SET	F	2	0	2	A0	*								
							STRT_PC							
							STOP_PC							
PWA_PWS_PARA_SET	F	5	0	5	A4	*								
							ADDRESS							
							DATA0							
							DATA1							
							DATA2							
							DATA3							
PWA_PWS_EDIT_SET	F	1	0	1	A6	*								
							TRG_LEVEL							
PWA_WNT_ON_SET	F	1	0	1	C0	*								

Table C-2 BC Command List (20/26)

PWA | ***IC-Code : 08***

BC Name	BC F/V Spec	BC Size (byte)	Specifier (byte)	Parameter (byte)	Code		BC Bit							
					DC (HEX)	BC (HEX)	MSB B0	B1	B2	B3	B4	B5	B6	LSB B7
PWA_WNT_ON_SET_FF	F	1	1	0	C0	FF	1	1	1	1	1	1	1	1
PWA_WNT1_SEL_ON	F	1	1	0	C0	08	0	0	0	0	1	0	0	0
PWA_WNT2_SEL_ON	F	1	1	0	C0	04	0	0	0	0	0	1	0	0
PWA_WNT3_SEL_ON	F	1	1	0	C0	02	0	0	0	0	0	0	1	0
PWA_WNT4_SEL_ON	F	1	1	0	C0	01	0	0	0	0	0	0	0	1
PWA_WNT13_SEL_ON	F	1	1	0	C0	0A	0	0	0	0	1	0	1	0
PWA_WNT24_SEL_ON	F	1	1	0	C0	05	0	0	0	0	0	1	0	1
PWA_WNT12_SEL_ON	F	1	1	0	C0	0C	0	0	0	0	1	1	0	0
PWA_WNT23_SEL_ON	F	1	1	0	C0	06	0	0	0	0	0	1	1	0
PWA_WNT34_SEL_ON	F	1	1	0	C0	03	0	0	0	0	0	0	1	1
PWA_WNT41_SEL_ON	F	1	1	0	C0	09	0	0	0	0	1	0	0	1
PWA_WNT123_SEL_ON	F	1	1	0	C0	0E	0	0	0	0	1	1	1	0
PWA_WNT234_SEL_ON	F	1	1	0	C0	07	0	0	0	0	0	1	1	1
PWA_WNT341_SEL_ON	F	1	1	0	C0	0B	0	0	0	0	1	0	1	1
PWA_WNT412_SEL_ON	F	1	1	0	C0	0D	0	0	0	0	1	1	0	1
PWA_WNT1-4_SEL_ON	F	1	1	0	C0	0F	0	0	0	0	1	1	1	1
PWA_WNT_STBY_ON	F	1	1	0	C0	80	1	0	0	0	0	0	0	0
PWA_WNT_ANT_EXT	F	1	1	0	C0	40	0	1	0	0	0	0	0	0
PWA_WNT_MONI_ON	F	1	1	0	C0	20	0	0	1	0	0	0	0	0
PWA_WNT_LIM_DIS	F	1	1	0	C0	10	0	0	0	1	0	0	0	0
PWA_WNT_OFF_SET	F	1	0	1	C2	*								
PWA_WNT_OFF_SET_FF	F	1	1	0	C2	FF	1	1	1	1	1	1	1	1
PWA_WNT1_SEL_OFF	F	1	1	0	C2	08	0	0	0	0	1	0	0	0
PWA_WNT2_SEL_OFF	F	1	1	0	C2	04	0	0	0	0	0	1	0	0
PWA_WNT3_SEL_OFF	F	1	1	0	C2	02	0	0	0	0	0	0	1	0
PWA_WNT4_SEL_OFF	F	1	1	0	C2	01	0	0	0	0	0	0	0	1
PWA_WNT13_SEL_OFF	F	1	1	0	C2	0A	0	0	0	0	1	0	1	0
PWA_WNT24_SEL_OFF	F	1	1	0	C2	05	0	0	0	0	0	1	0	1
PWA_WNT12_SEL_OFF	F	1	1	0	C2	0C	0	0	0	0	1	1	0	0
PWA_WNT23_SEL_OFF	F	1	1	0	C2	06	0	0	0	0	0	1	1	0
PWA_WNT34_SEL_OFF	F	1	1	0	C2	03	0	0	0	0	0	0	1	1
PWA_WNT41_SEL_OFF	F	1	1	0	C2	09	0	0	0	0	1	0	0	1
PWA_WNT123_SEL_OFF	F	1	1	0	C2	0E	0	0	0	0	1	1	1	0
PWA_WNT234_SEL_OFF	F	1	1	0	C2	07	0	0	0	0	0	1	1	1
PWA_WNT341_SEL_OFF	F	1	1	0	C2	0B	0	0	0	0	1	0	1	1
PWA_WNT412_SEL_OFF	F	1	1	0	C2	0D	0	0	0	0	1	1	0	1
PWA_WNT1-4_SEL_OFF	F	1	1	0	C2	0F	0	0	0	0	1	1	1	1
PWA_WNT_STBY_OFF	F	1	1	0	C2	80	1	0	0	0	0	0	0	0
PWA_WNT_ANT_RET	F	1	1	0	C2	40	0	1	0	0	0	0	0	0
PWA_WNT_MONI_OFF	F	1	1	0	C2	20	0	0	1	0	0	0	0	0
PWA_WNT_LIM_ENA	F	1	1	0	C2	10	0	0	0	1	0	0	0	0

Table C-2 BC Command List (21/26)

MPM | **IC-Code : 09**

BC Name	BC F/V Spec	BC Size (byte)	Specifier (byte)	Parameter (byte)	Code DC (HEX)	Code BC (HEX)	BC Bit MSB B0	B1	B2	B3	B4	B5	B6	LSB B7
MPM_MODE_CHANGE	F	3	0	3	22		0	0	0	EDITION_FORMAT				
							0	0	0	0	EDITION_BIT_RATE			
							X-BAND BIT RATE				S-BAND BIT RATE			
MGF_RNG_SET	F	1	0	1	37		–	RNGSET 1: X 0: –	RNGSET 1: Y 0: –	RNGSET 1: Z 0: –	–	–	MGF_RANGE	
MGF_PET_MODE_SET	F	1	0	1	38		SNS 1:REV 0:NOR	RNG 1:BC 0:AUTO	MGF_RANGE		SWEEP 1:ON 0:OFF	PET_EDITION_MODE		
UVS_OBS_MODE_SET	F	1	0	1	45		–	–	UVS_OBS_MODE		–	UVS_OBS_SUB_MODE		
UVS_BOS_LEVEL_SET	F	1	0	1	46		UVS_BOS_LEVEL							
UVS_G_DATA_SET	F	1	0	1	4A		BOS 1:ENA 0:DIS	MCP_DISC_LEVEL		MCP_HV_LEVEL				
							LIS_AMP_GAIN		PM_DISC	PM_HV_LEVEL				
UVS_LIS_PM_DATA_SET	F	1	0	1	52		H-FIL_TEMP		D-FIL_TEMP		H-FIL_SEL		D-FIL_SEL	
UVS_PM_FIL_DATA_SET	F	1	0	1	53		BOS 1:ENA 0:DIS	MCP_DISC_LEVEL		MCP_HV_LEVEL				
UVS_DATA_SET	F	5	0	5	54		LIS_AMP_GAIN		PM_DISC	PM_HV_LEVEL				
							H-FIL_TEMP		D-FIL_TEMP		H-FIL_SEL		D-FIL_SEL	
							UVS_BOS_LEVEL							
							–	–	UVS_OBS_MODE		–	UVS_OBS_SUB_MODE		
MST_STOP_SET	F	1	0	1	88		–	–	MTR_TEMP 1:ENA 0:DIS	REEL_COUNT 1:ENA 0:DIS	TENT_ON 1:ENA 0:DIS	TENT_OFF 1:ENA 0:DIS	RET_FULL 1:ENA 0:DIS	RET_N_FULL 1:ENA 0:DIS
MST_REEL_COUNT_SET	F	1	0	1	89		MTR_STOP_REEL_COUNT							
MST_TEMP_SET	F	1	0	1	8A		MTR_STOP_MTR_TEMP							
MST_CUR_SET	F	1	0	1	8B		MTR_STOP_MTR_CURRENT							
MPM_ECC_ERROR_DUMP	F	1	0	1	F1		DUMP_PACKET_NUMBER							

Table C-2 BC Command List (22/26)

MIC | **IC-Code : 0A**

BC Name	BC F/V Spec	BC Size (byte)	Specifier (byte)	Parameter (byte)	Code		BC Bit							
					DC (HEX)	BC (HEX)	MSB B0	B1	B2	B3	B4	B5	B6	LSB B7
MIC_MODE_SET	F	5	0	5	41	*								
MIC_TAKE	F	1	0	1	42	*								
MIC_SRCH_AREA_SET	F	4	0	4	44	*								
MIC_MANUAL_MODE	F	1	1	0	51	00								
MIC_SOFT_MODE	F	1	1	0	51	FF								
MIC_TRK_PARAM	F	22	0	22	52	*								

Table C-2 BC Command List (23/26)

IMI | **IC-Code : 0B**

BC Name	BC F/V Spec	BC Size (byte)	Specifier (byte)	Parameter (byte)	Code DC (HEX)	Code BC (HEX)	BC Bit MSB B0	B1	B2	B3	B4	B5	B6	LSB B7
IMI_BSET	F	1	0	1	3B									
IMI_P4KV	F	1	0	1	3C									
IMI_P400V	F	1	0	1	3D									
IMI_DFFIX	F	1	0	1	3E									
IMI_DFSET	F	2	0	2	3F									
IMI_SETP	F	3	2	1	4C	CODE								
IMI_SETHEX	F	4	2	2	4D	CODE								
IMI_NOISE	F	1	0	1	60									
IMI_FMIN	F	2	0	2	61									
IMI_FMAX	F	2	0	2	62									
IMI_FFRC	F	2	0	2	63									
IMI_FCLR	F	2	0	2	64									
IMI_SPDCH	F	1	0	1	65									
IMI_DMPL	F	2	0	2	66									
IMI_DMPH	F	2	0	2	67									
IMI_CALNR	F	1	0	1	6D									
IMI_SPIN	F	2	0	2	6E									
IMI_FSPIN	F	2	0	2	6F									
IMI_DC70_FEED	F	2	2	0	70	FEED								
IMI_DC70_FACE	F	2	2	0	70	FACE								
IMI_DC70_BADA	F	2	2	0	70	BADA								
IMI_DC70_CAFE	F	2	2	0	70	CAFE								
IMI_DC70_DOFF	F	2	2	0	70	DOFF								
IMI_WRD_TO_RAM	F	4	0	4	71									
IMI_WRD_TO_PROM	F	4	0	4	72									
IMI_BLK_TO_RAM	V	132	0	132	73									
IMI_BLK_TO_PROM	V	132	0	132	74									
IMI_N_BLK_TO_PROM	V	132	0	132	75									
IMI_RMK_INT_MSK	F	4	2	2	78	ECOE								
IMI_PRGTST_FACE	F	2	2	0	79	FACE								
IMI_PRGTST_CAFE	F	2	2	0	79	CAFE								
IMI_BC_DMY_CMD	V	12	0	12	FD									

Table C-2 BC Command List (24/26)

MDC | **IC-Code : 0C**

BC Name	BC F/V Spec	BC Size (byte)	Specifier (byte)	Parameter (byte)	Code DC (HEX)	Code BC (HEX)	BC Bit MSB B0	B1	B2	B3	B4	B5	B6	LSB B7
MDC_CPU_RESET	F	4	4	0	30	030002FB								
MDC_CLEAR_RAM	F	4	4	0	30	030004F9								
MDC_TEST_PULSE	F	4	4	0	30	030006F7								
MDC_PWSON	F	4	4	0	30	030008F5								
MDC_PWSOFF	F	4	4	0	30	03000AF3								
MDC_SET_PAR_1	V	5	0	5	31									
MDC_SET_PAR_2	V	6	0	6	31									
MDC_SETTRM_01	F	6	6	0	31	05005D939477								
MDC_SETTRM_02	F	6	6	0	31	05005D959673								
MDC_SETTRM_03	F	6	6	0	31	05005D97986F								
MDC_SETTRM_04	F	6	6	0	31	05005D999A6B								
MDC_SETTRM_05	F	6	6	0	31	05005D9B9C67								
MDC_SETTRM_06	F	6	6	0	31	05005D9D9E63								
MDC_SETTRM_07	F	6	6	0	31	05005D952FDA								
MDC_SETTRM_08	F	6	6	0	31	05005D151772								
MDC_SETTRM_09	F	6	6	0	31	05005D958782								
MDC_SETTRM_10	F	6	6	0	31	05005D948486								
MDC_SETTRM_11	F	6	6	0	31	05005D2F2F40								
MDC_SETTRM_12	F	6	6	0	31	05005D968682								
MDC_SETTRM_13	F	6	6	0	31	05005D968781								
MDC_SETTMAD_01	F	6	6	0	31	05006E00206D								
MDC_SETTMAD_02	F	6	6	0	31	05006E00800D								
MDC_SETTMAD_03	F	6	6	0	31	05006E00C0CD								
MDC_SETEC	F	5	5	0	31	040091006B								
MDC_SETNC	F	8	8	0	31	0700930000000066								
MDC_CAL_TP_IC	F	6	6	0	31	05006A600130								
MDC_CAL_TP_NC	F	6	6	0	31	05006A62012E								
MDC_CAL_TP_ONE	F	5	5	0	31	04006C0E82								
MDC_CAL_TP_MIX	F	5	5	0	31	04006C1080								
MDC_KO_CRITERIA_01	F	12	12	0	31	0B0060E2E2E2E250405040ED								
MDC_KO_CRITERIA_02	F	12	12	0	31	0B0060D0D030300000000095								
MDC_KO_CRITERIA_03	F	12	12	0	31	0B00600000D0D06050605095								
MDC_KO_CRITERIA_04	F	12	12	0	31	0B0060E2E2E2E270407040AD								
MDC_NC_QUAL_01	F	5	5	0	31	04002A30A2								
MDC_NC_QUAL_02	F	5	5	0	31	04002A00D2								
MDC_NC_LIMIT_01	F	6	6	0	31	05002B9FD958								
MDC_NC_LIMIT_02	F	6	6	0	31	05002B00F0E0								
MDC_NC_LIMIT_03	F	6	6	0	31	05002B00D000								
MDC_QUALITY_01_NC	F	12	12	0	31	0B00400000001500282828								
MDC_QUALITY_02_NC	F	12	12	0	31	0B00400000000000000000B5								
MDC_TESTNCNEG	F	6	6	0	31	050026850749								
MDC_TESTNCPOS	F	6	6	0	31	0500267C0752								
MDC_TESTNC1OP	F	6	6	0	31	0500264F077F								
MDC_TESTNC1ON	F	6	6	0	31	050026580776								
MDC_LIMIT12V	F	10	10	0	31	09004B0494B00491B01F								

Table C-2 BC Command List (25/26)

TPA | **IC-Code : 0D**

BC Name	BC F/V Spec	BC Size (byte)	Specifier (byte)	Parameter (byte)	Code DC (HEX)	Code BC (HEX)	BC Bit MSB B0	B1	B2	B3	B4	B5	B6	LSB B7
TPA_MODE_CHANGE	F	3	0	3	22									
TPA_GO_SUB	F	6	0	6	47									
TPA_REASSIGN_PMEM	F	1	0	1	64									
TPA_MANUAL_BOOT	F	1	0	1	69									
TPA_INVOKE_OM_N	F	1	0	1	8F									
TPA_SENSORGL	F	9	0	9	C8									
TPA_HVPSGL	F	12	0	12	DA									
TPA_LOAD_128	F	132	0	132	E0									
TPA_LOAD_8	F	12	0	12	E5									
TPA_MEMORY_DUMP	F	6	0	6	E9									

Table C-2 BC Command List (26/26)

NMS | ***IC-Code : 0E***

BC Name	BC F/V Spec	BC Size (byte)	Speci-fier (byte)	Para-meter (byte)	Code		BC Bit							
					DC (HEX)	BC (HEX)	MSB B0	B1	B2	B3	B4	B5	B6	LSB B7
NMS_RUN	F	2	0	2	2B	*								
NMS_ROM_RUN	F	2	2	0	2B	0000								
NMS_RAM_RUN	F	2	2	0	2B	8000								

Table C-3 BC Index Command (DC) List (1/5)

IC Code	IC Name	XY Code	Command name	Function
01	DHU	22	DHU_MODE_CHNG	
01	DHU	23	DHU_DUMP_PRM_SET	
01	DHU	24	DHU_TLM-ROM_UPDATE	
01	DHU	2F	DHU_DUMP_NUM_SET	
01	DHU	62	DHU_BFM_UPDATE	
01	DHU	63	DHU_USR-PRG_IPL	
01	DHU	64	DHU_USR-PRG_CHK	
01	DHU	71	DHU_PRG_AP_IPL	
01	DHU	72	DHU_PRG_OS_IPL	
01	DHU	73	DHU_AP-ROM_UPDATE	
01	DHU	82	DHU_USR-PRG_RAM_WRT	
01	DHU	83	DHU_RAM_WRT	
01	DHU	9F	DHU_RQOG_SET	
01	DHU	A4	DHU_TI_ABS_CAL	
01	DHU	A5	DHU_TI_DIF_CAL	
01	DHU	B8	DHU_ROG_SET	
01	DHU	C7	DHU_SH_TOUT_SET	
01	DHU	CF	DHU_ATOG_SET	
01	DHU	D0	DHU_AH_SET	
01	DHU	D1	DHU_DOD_LMT_SET	
01	DHU	D2	DHU_BSV-SDW_SET	
01	DHU	D3	DHU_PWR-SDW_MD1_SET	
01	DHU	D4	DHU_PWR-SDW_MD2_SET	
01	DHU	D5	DHU_PWR-SDW_MD3_SET	
02	AOCE	35	AOCE_CONFIG_BC	
02	AOCE	D5	AOCE_EEPROM_WRT	
02	AOCE	D6	AOCE_CPU_RAM_WRT	
02	AOCE	D7	AOCE_EEPROM_DMP	
02	AOCE	D8	AOCE_CPU_RAM_DMP	
02	AOCE	DA	AOCE_CPU_RAM_IPL	
02	AOCE	F2	AOCE_CPU-A_TEST_CMD	
02	AOCE	F3	AOCE_CPU-B_TEST_CMD	
02	AOCE	FA	AOCE_SRCH_EN	
02	AOCE	CD	AOCE_IP/PC_EN	
02	AOCE	D9	AOCE_AOCS_BC	
03	TCI	B0	TCI_SPM_TH_CNT_SET	

Table C-3 BC Index Command (DC) List (2/5)

IC Code	IC Name	XY Code	Command name	Function
04	HCE	33	HCE_TEMP_HI_BC_EN	
04	HCE	34	HCE_TEMP_LO_BC_EN	
04	HCE	39	HCE_HTR_AUTO_EN	
04	HCE	3B	HCE_HTR_ON_EN	
04	HCE	3D	HCE_HTR_OFF_EN	
05	PCD	31	PCD_BAT-A_K1_SET	
05	PCD	32	PCD_BAT-A_K2_SET	
05	PCD	33	PCD_BAT-A_C/D_SET	
05	PCD	34	PCD_BAT-B_C/D_SET	
05	PCD	35	PCD_BAT-B_K1_SET	
05	PCD	36	PCD_BAT-B_K2_SET	
06	DR	60	DR_MEM_BLKO_ON	
06	DR	61	DR_MEM_BLKO_OFF	
06	DR	FE	DR_DUMMY_COMMAND	
07	PSA	63	PSA_ISA_CNT_SET	
07	PAX	42	PAX_HV_ON_SET	
07	PAX	40	PAX_HV_ENA_SET	
07	PAX	44	PAX_HV_OFF_SET	
07	PAX	60	PAX_HV_SET	
07	PAX	50	PAX_HV_SCAN_SET	
07	PSA	46	PSA_H32_CNT_SET	
07	PAX	61	PAX_CNT_SET	
07	PSA	4A	PSA_H32_ST_ADRS_SET	
07	ESA	62	ESA_CNT_SET	
07	XUV	64	XUV_FOV_SET	
07	PSA	E0	PSA_ACTIVATE	
07	PSA	C0	PSA_SHUTDOWN	
07	EIS	92	EIS_DET_FIX	
07	EIS	82	EIS_HV_ENA_SET	
07	EIS	A2	EIS_HV_DIS_SET	
07	EIS	84	EIS_HV_ON_SET	
07	EIS	A4	EIS_HV_OFF_SET	
07	EIS	8E	EIS_HV_CTL_SET	
07	EIS	8C	EIS_DISC_SET	
07	EIS	90	EIS_CNT_SET	

Table C-3 BC Index Command (DC) List (3/5)

IC Code	IC Name	XY Code	Command name	Function
08	PWA	30	PWA_LFA_ON	
08	PWA	32	PWA_LFA_OFF	
08	PWA	34	PWA_LFA_BIAS_SET	
08	PWA	36	PWA_LFA_BANK_SET	
08	PWA	38	PWA_LFA_GAIN_SET	
08	PWA	3A	PWA_LFA_FIFO_RST_WE	
08	PWA	3C	PWA_LFA_CAL_SET	
08	PWA	3E	PWA_LFA_OFA_MODE_ST	
08	PWA	40	PWA_LFA_WFCM_REC	
08	PWA	42	PWA_LFA_WFCM_AD_SET	
08	PWA	44	PWA_LFA_CMPR_SET	
08	PWA	46	PWA_LFA_AGC_SET	
08	PWA	48	PWA_LFA_OBS_SET	
08	PWA	4A	PWA_LFA_WFCH_REC	
08	PWA	76	PWA_PAC_FRM_SET	
08	PWA	90	PWA_PWS_RLY_ON_SET	
08	PWA	92	PWA_PWS_RLY_OFF_SET	
08	PWA	94	PWA_PWS_MODE_SET	
08	PWA	96	PWA_PWS_MENU_SET	
08	PWA	98	PWA_PWS_RX_SET	
08	PWA	9A	PWA_PWS_GAIN_SET	
08	PWA	9E	PWA_PWS_FREQ_SET	
08	PWA	A0	PWA_PWS_TX_PC_SET	
08	PWA	A4	PWA_PWS_PARA_SET	
08	PWA	A6	PWA_PWS_EDIT_SET	
08	PWA	C0	PWA_WNT_ON_SET	
08	PWA	C2	PWA_WNT_OFF_SET	
09	MPM	22	MPM_MODE_CHANGE	
09	MGF	37	MGF_RNG_SET	
09	MGF	38	MGF_PET_MODE_SET	
09	UVS	45	UVS_OBS_MODE_SET	
09	UVS	46	UVS_BOS_LEVEL_SET	
09	UVS	4A	UVS_G_DATA_SET	
09	UVS	52	UVS_LIS_PM_DATA_SET	
09	UVS	53	UVS_PM_FIL_DATA_SET	
09	UVS	54	UVS_DATA_SET	
09	MST	88	MST_STOP_SET	

Table C-3 BC Index Command (DC) List (4/5)

IC Code	IC Name	XY Code	Command name	Function
09	MST	89	MST_REEL_COUNT_SET	
09	MST	8A	MST_TEMP_SET	
09	MST	8B	MST_CUR_SET	
09	MPM	F1	MPM_ECC_ERROR_DUMP	
0A	MIC	41	MIC_MODE_SET	
0A	MIC	42	MIC_TAKE	
0A	MIC	44	MIC_SRCH_AREA_SET	
0A	MIC	51	MIC_MANUAL_MODE	
0A	MIC	52	MIC_TRK_PARAM	
0B	IMI	3B	IMI_BSET	
0B	IMI	3C	IMI_P4KV	
0B	IMI	3D	IMI_P400V	
0B	IMI	3E	IMI_DFFIX	
0B	IMI	3F	IMI_DFSET	
0B	IMI	4C	IMI_SETP	
0B	IMI	4D	IMI_SETHEX	
0B	IMI	60	IMI_NOISE	
0B	IMI	61	IMI_FMIN	
0B	IMI	62	IMI_FMAX	
0B	IMI	63	IMI_FFRC	
0B	IMI	64	IMI_FCLR	
0B	IMI	65	IMI_SPDCH	
0B	IMI	66	IMI_DMPL	
0B	IMI	67	IMI_DMPH	
0B	IMI	6D	IMI_CALNR	
0B	IMI	6E	IMI_SPIN	
0B	IMI	6F	IMI_FSPIN	
0B	IMI	70	IMI_DC70_FEED	
0B	IMI	71	IMI_WRD_TO_RAM	
0B	IMI	72	IMI_WRD_TO_PROM	
0B	IMI	73	IMI_BLK_TO_RAM	
0B	IMI	74	IMI_BLK_TO_PROM	
0B	IMI	75	IMI_N_BLK_TO_PROM	
0B	IMI	78	IMI_RMK_INT_MSK	
0B	IMI	79	IMI_PRGTST_FACE	
0B	IMI	FD	IMI_BC_DMY_CMD	

Table C-3 BC Index Command (DC) List (5/5)

IC Code	IC Name	XY Code	Command name	Function
0C	MDC	30	MDC_CPU_RESET	
0C	MDC	31	MDC_SET_PAR_1	
0D	TPA	22	TPA_MODE_CHANGE	
0D	TPA	47	TPA_GO_SUB	
0D	TPA	64	TPA_REASSIGN_PMEM	
0D	TPA	69	TPA_MANUAL_BOOT	
0D	TPA	8F	TPA_INVOKE_OM_N	
0D	TPA	C8	TPA_SENSORGL	
0D	TPA	DA	TPA_HVPSGL	
0D	TPA	E0	TPA_LOAD_128	
0D	TPA	E5	TPA_LOAD_8	
0D	TPA	E9	TPA_MEMORY_DUMP	
0E	NMS	2B	NMS_RUN	
0E	NMS	FD	NMS_BC_DMY_CMD	

Appendix-D

Special Abbreviations, Acronyms and Nomenclature

ACM	Accelerometer
ACP	Autonomous Control Program
A/D	Analog-to-Digital Converter
ADRS	Address
AGC	Automatic Gain Control
ALT	Altimeter
AMP	Amplifier
ANT	Antenna
ACS	Attitude Control System
ANC	Active ANC Control
AOCE	Attitude and Orbit Control Electronics
AOCP	Attitude and Orbit Control Processor
AOCS	Attitude and Orbit Control System
AOS	Advanced Orbiting Systems, Arival of Satellite
AU	Astronomical Unit
BAT	Battery
BC	Block Command
BCCU	Battery Charge Control Unit
BCNT	Bus Control Module
BER	Bit Error Rate
BFM	Back-up File Memory
BiØ-L	Bi Phase L
BLK	Block
BPF	Band Pass Filter
bps	Bits per second
BRR	Blue Red Reflective
BUF	Buffer
BW	Band Width
CAB	Command Answer Back
CAL	Calibration
CCCG	Conductive Coating Cover Glass
CCSDS	Consultative Committee for Space Data Systems
C&DH	Command and Data Handling
CE	Command Element
CFRP	Carbon Fiber Reinforced Plastics
CG	Cover Glass, Center of Gravity
CHG	Charging
CHK	Check
CHNG	Change
CI	Common Instrument
CLCW	Command Link Control Word
CLK	Clock
CLS	Close
CM	Command
CMD	Command Decoder
CMDIF	Command Interface Module
CNCL	Cancel
CNESS	Centre Narinal d'Etudes Spatiales
COH	Choherent
Co-I	Co-Investigator
COMP	Compare
CPM	CPU Module
CPU	Central Processing Unit
CRM	Clamp Release Mechanism
CSA	Canadian Space Agency
CTL	Control
CV	Check Valve
DC	Discrete Command
DET	Detector, Detection
DEMO	Demodulator
DHS	Data Handling System
DHU	Data Handling Unit
DIS	Disable
DISC	Discrimination
DIST	Distributor
DL	Delayed Look
DLM	Deploy Mechanism
DMA	Direct Memory Access
DMP	Dump
DOD	Degree of Discharge
DPB	Double Probe
DPLY	Deploy
DPRAM	Dual Port RAM
DPU	Data Processing Unit
DR	Data Recorder
DRV	Drive
DSN	Deep Space Network
DSP	Digital Signal Processor
E^2PROM	Electrically Erasable Programable ROM
ECC	Error Correction Circuit
ECW	End of Command Writing
EEPROM	Electrically Erasable Programable ROM
EGM	Engine Module
EGSE	Electrical Ground Support Equipment

EIS	Electron and Ion Spectrometer
EIC	Electrical Interface Compatibility
EMC	Electromagnetic Compatibility
EMI	Electromagnetic Interference
ENA	Enable
EPS	Electrical Power System
EPT-SA	Electrical Programmable Timer - Satellite
ERR	Error
ESA	Electron Spectrum Analyzer
eV	Electron Volt
EXT	Extension
FIFO	First-In First-Out
FMT	Format
FOV	Field of View
FPGA	Field Programmable Gate Array
FUL	Full
Func-S	Simple Function Test
Func-D	Detailed Function Test
GDP	Guard Pulse
GHe	Gas Helium
GRS	Gas Rate Sensor
GSE	Ground Support Equipment
HCE	Heater Control Electronics
HGA	High Gain Antenna
HK	Housekeeping
HPF	High Pass Filter
HTR	Heater
HV	High Voltage
H/W	Hardware
IC	Identification Number
ICD	Interface Control Document
ICM	Image Compression Module
IMI	Ion Mass Imager
INIT	Initialization
INS-SA	Instrument - Satellite
INT	Interrupt
INTRPT	Interrupt
I/O	Input/Output
IP	Index Pulse, Internet Protocol
IRF	Swedish Institute of Space Physics
ISA	Ion Spectrum Analyzer
ISACS	Intelligent Satellite Control Software System
ISAS	Institute of Space and Astronautical Science
kbps	Kilobits per second
keV	Kilo-Electron Volt
KSC	Kagoshima Space Center
LBSF	Localized Back Surface Field
LEO	Low Earth Orbit
LFA	Low Frequency Wave Analyzer
LGA	Low Gain Antenna
LNA	Low Noise Amplifiler
LOS	Loss of Satellite
LPF	Low Pass Filter
LV	Latching Valve
LVL	Level
MANU	Manual
MDC	Mars Dust Counter
MEM	Memory
MeV	Mega-Electron Volt
MGF	Magnetic Field Measuremeter
MGSE	Mechanical Ground Support Equipment
MIC	Mars Imaging Camera
MINT	Mechanical Integration
MLI	Multilayer Insulator Blancket
MOD	Moadulation
MOI	Mars Orbit Insertion, Moment of Inertia
MONI	Monitor
MPM	MGF/PET/MST/UVS
MPX	Multiplexer
MST	Extendable Mast
NASA	National Space and Aeronautical Agency
ND	Nutation Damper
NEI	Number Density of Electron by Impedance Probe
NiMH	Nickel Metal Hydride
NML	Normal
NMS	Neutral Gas Mass Spectrometer
NPW	Natural Plasma Wave
NRS	Non-Reflective Surface
OFA	Onboard Frequency Analyzer
OG	Organized Command
OGE	OG Element
OMS	Orbital Maneuvering System
OP	Operation Program
OPN	Open
ORL	Operation Request Language
OVC	Over Voltage Control

OVF	Overflow
PC	Phase Clock, Personal Computer
PCD	Power Controller and Distributor
PCS	Power Control System
PCM	Pulse Code Modulation
PCU	Power Control Unit
PDL	Paddle
PET	Probe for Electron Temperature
PI	Principal Investigator
PIM	Peripheral Interface Module
PLS	Pulse
PM	Phase Modulation, Proto Model, Photomultiplier
PNL	Pannel
PRE	Pre-Amplifier
PRIM	Primary
PROG	Program
PROM	Programable ROM
PSA	Particle Spectrum Analyzer
PSK	Phase Shift Keying
PSU	Power Supply Unit
PWA	Plasma Wave Analyzer
PWR	Power
PWS	Plasma Wave and Sounder Experiment
QL	Quick Look
RAM	Random Access Memory
RARR	Range and Rage Rate
RCS	Reaction Control System
RD	Remote Disconnection
REC	Record
REG	Regulator
REP	Reproduce
REQ	Request
RET	Retraction
RF	Radio Frequency
RGA	Rate Gyro Assembly
RNG	Ranging
ROM	Read Only Memory
RPM	Revolutions per minute
RS	Reed Solomon
RST	Reset
RV	Relief Valve
SAS	Sun Aspect Sensor
SBR	S-Band Receiver
SC	Solar Cell
S/C	Spacecraft
SCP	Solar Cell Paddle
SDIP	S-Band Diplexer
SECND	Secondary
SEL	Select
SEQ	Sequence
SG	Signal Generator
S/H	Sample Holder, Safe Hold
SHNT	Shunt Dissipater
SI	Scientific Instrument
SIG	Signal
SPB	Single Probe
SPM	Solar Particle Monitor
SPW	Stimulated Plasma Wave
S/S	Sub-System
SSAS	Spin-Type Sun Aspect Sensor
SSC	Star Scanner
SSOC	Sagamihara Spacecraft Operation Center
SSW	S-Band Switch
STBY	Standby
STR	Structure
STS	Star Scanner
S/W	Software
TBD	To be Determined
TBS	To be Studied, To be Supplied
TBV	To be Verified
TCI	Telemetry Command Interface
TCM	Trajectory Control Maneuvers
TCP	Transfer Control Protocol
TCS	Thermal Control System
TCXO	Temperature Control Crystal Oscillator
THR	Thruster
TI	Time Indicator
TIC	TI Counter
TINT	Thermal Integration
TLM	Telemeter
TLMP	Telemetry Processor Module
TMS	S-Band Transmitter
TMX	X-Band Transmitter
TNK	Tank
TPA	Thermal Plasma Analyzer
TT&C	Tracking, Telemetry, and Command
TVT	Thermal Vacume Test
UD	Update
UDSC	Usuda Deep Space Center
USO	Ultra-Stable Oscillator
UVC	Under Voltage Control

UVS	Ultraviolet Imaging Spectrometer
VCO	Voltage Control Oscillator
VLF	Very Low Frequency
VM	Valve Module
WANT	Wire Antenna
WDT	Watch Dog Timer
WFC	Wave Form Capture
WFC-D	Direct-Mode WFC
WFC-M	Memory-Mode WFC
WHN	Wire Harness
WS	Workstation
XPA	X-Band Power Amplifier
XUV	Extremely Ultraviolet Imager